9/84

HERITAGE FLEET ELECTRICAL SCHEMATICS

	DRAWING NO.	TITLES/DESCRIPTION
1	D-04-414	ELECTRICAL AND ELECTRONIC SYMBOLS
2	D-07-601	A/C AND REFRIGERATION SYMBOLS
3	C-05-1313	STANDARD DRAWING FORMAT
4	E-01-767	TEMPERATURE CONTROL SCHEMATIC BAG DORM 1610-1617
5	E-01-1700	TEMPERATURE CONTROL SCHEMATIC BAG DORM 1618-1627
6	E-01-771	TEMPERATURE CONTROL SCHEMATIC SLUMBER COACH 2050-2056 2080-2095
7	E-01-770	TEMPERATURE CONTROL SCHEMATIC SLEEPER 2430-2482 2871-2896
8	E-01-779	TEMPERATURE CONTROL SCHEMATIC LOUNGE 3100-3128
9	E-01-768	TEMPERATURE CONTROL SCHEMATIC COACH 4000-4026 4600-4650 4700-4742 5000-5008 7000-7007 7600-7618
10	E-01-769	TEMPERATURE CONTROL SCHEMATIC DINER 8500-8528
11	E-01-772	TEMPERATURE CONTROL SCHEMATIC DINER (KITCHEN) 8500-8528
12	B.G. DEC 1983	TEMPERATURE CONTROL SCHEMATIC DOME
13	E-01-755	HEATING AND A/C WIRING BAG DORM 1610-1613
14	E-01-860	HEATING AND A/C WIRING BAG DORM 1614-1617
15	E-01-756	HEATING AND A/C WIRING SLUMBER COACH 2050-2056
16	E-01-861	HEATING AND A/C WIRING SLUMBER COACH 2080-2095
17	E-01-1673	HEATING AND A/C WIRING SLEEPER 2430-2456
18	E-01-1677	HEATING AND A/C WIRING SLEEPER 2457-2460

HERITAGE FLEET ELECTRICAL SCHEMATICS

	DRAWING NO.	TITLES/DESCRIPTION
19	E-01-757	HEATING AND A/C WIRING SLEEPER 2880-2883
20	E-91-862	HEATING AND A/C WIRING SCHEMATIC 2884-2894
21	E-01-758	HEATING AND A/C WIRING LOUNGE 3100-3105
22	E-01-863	HEATING AND A/C WIRING LOUNGE 3106-3112
23	E-01-759	HEATING AND A/C WIRING COACH 4600-4650
24	E-01-864	HEATING AND A/C WIRING COACH 4700-4742 7000-7007 5000-5008 7600-7618
25	E-01-754	HEATING AND A/C WIRING DINER 8500-8504
26	E-01-865	HEATING AND A/C WIRING DINER 8505-8528
27	E-01-700	SCHEMATIC DIAGRAM A/C CONTROL
28	D-01-750	SCHEMATIC ANTIFREEZE - WATER PROTECTION
29	E-04-760	ANTIFREEZE - WATER PROTECTION INSTALLATION
30	E-04-546	ANTIFREEZE - WATER PROTECTION INSTALLATION
31	E-01-837	LIGHTING AND CONV. OUTLETS BAG DORM 1614-1637
32	E-01-724	LIGHTING AND CONV. OUTLETS SLUMBERCOACH 2050-2056
33	E-01-834	LIGHTING AND CONV. OUTLETS SLUMBERCOACH 2080-2095
34	E-01-168	LIGHTING AND CONV. OUTLETS 10/6 SLEEPER HC 2871-2879 2430-2481
35	E-01-725	LIGHTING AND CONV. OUTLETS 10/6 SLEEPER 2880-2896
36	E-01-726	LIGHTING AND CONV. OUTLETS LOUNGE 3100-3105
37	E-91-835	LIGHTING AND CONV. OUTLETS LOUNGE 3106-3127
38	E-01-1685	LIGHTING AND CONV. OUTLET COACH 4600-4016
39	E-01-706	LIGHTING AND CONV. OUTLET COACH 4600-4650
40	E-01-836	LIGHTING AND CONV. OUTLET COACH 4700-4742 7000-7007 5000-5008 7600-7618

HERITAGE FLEET ELECTRICAL SCHEMATICS

	DRAWING NO.	TITLES/DESCRIPTION
63	R-04-761	WIRING SCHEMATIC BAG DORM
64	R-04-763	WIRING SCHEMATIC SLEEPER CAR
65	E-04-651	OVERHEAD CONDUIT AND WIRING COACH
66	D-01-527	E-5 DECELOSTAT CONTROLLER SYSTEM
67	G-01-715	GAYLORD VENTILATOR CONTROL DINER
68	D-04-822	SCHEMATIC WIRING LOAD DATA LOUNGE
69	D-04-821	SCHEMATIC WIRING LOAD KITCHEN
70	D-01-538	SYSTEM SCHEMATIC DIAGRAM FOOD SERVICE POWER DINER
71	D-01-793	REFRIGERATION SCHEMATIC EVAPORATOR'S DINER
72	D-01-794	REFRIGERATION EQUIPMENT SCHEMATIC COMPRESSOR/CONDENSER
73	D-01-1660	REFRIGERATION EQUIPMENT SCHEMATIC COMPRESSOR/CONDENSER
74	D-01-795	REFRIGERATION SCHEMATIC EVAPORATORS LOUNGE
75	D-01-796	REFRIGERATION EQUIPMENT SCHEMATIC COMPRESSOR/CONDENSER
76	14776-300-901	TIA OVEN MODEL 1636-5C
77		MARKET FRGE CONVECTION OVEN
78	AM-ES-12	HOBART DISHWASHER DINER
79		MICROWAVE
80		
81	R-01-722	WIRING SCHEMATIC PROGRAM CAR
82	D-01-565	TEMPERTAURE CONTROL SCHEMATIC BAGGAGE CAR
83	D-01-716	SINGLE LINE SCHEMATIC BAGGAGE CAR 1126-1132 1140-1169 1137-1138 1203-1272
84	D-01-1710	SINGLE LINE SCHEMATIC BAGGAGE CAR 1133-1136 1170-1177 1139
85	D-04-745	PUBLIC ADDRESS WIRING DIAGRAM BAGGAGE CARS

HERITAGE FLEET ELECTRICAL SCHEMATICS

	DRAWING NO.	TITLES/DESCRIPTION
86	E-04-913	ELECTRIC LOCKER WIRING 1350-1379
87	E-01-911	COMMUNICATION AND TRAINLINE SCHEMATIC 1350-1379
88	D-04-458	COMMUNICATION AND TRAINLINE SCHEMATIC 1126-1177 1203-1272
89	D-01-912	SINGLE LINE POWER SCHEMATIC BAGGAGE CAR 1350-1379
90	D-01-915	TEMPERATURE CONTROL SCHEMATIC BAGGAGE CAR 1350-1379
91		
92		
93		BLANKS FOR 2900 SERIES PRINTS
94		
95		
96		
97		
98		
99		
100		
101		
102		
103		
104		
105	D-01-473	TEMPERATURE CONTROL PANEL SLEEPER 2700
106	E-00-474	TEMPERATURE CONTROL PANEL SLEEPER 2900
107		
108		

HERITAGE FLEET ELECTRICAL SCHEMATICS

DRAWING NO.	TITLES/DESCRIPTION
109	
110	
111	
112	

HERITAGE FLEET ELECTRICAL SCHEMATICS

	DRAWING NO.	TITLES/DESCRIPTION
1	R-04-1011	ELECTRIC LOCKER WIRING DIAGRAM COACH/DORM 39902-39911
2	R-04-1112	ELECTRIC LOCKER WIRING DIAGRAM COACH/DORM 39912-39923 39925-399936
3	R-01-1013	HEAT WIRING SCHEMATIC COACH/DORM 39902-39936
4	R-01-1025	TEMPERATURE CONTROL SCHEMATIC COACH/DORM 39902-39938
5	R-04-1027	WIRING DIAGRAM SWITCH LOCKER COACH/DORM 39925-39936 39912-39923
6	R-04-1087	WIRING DIAGRAM SWITCH LOCKER COACH/DORM 39902-39911
7	R-01-1155	HEAT WIRING SCHEMATIC COACH DORM 39900,01,37,38 39912-39923
8	R-01-1158	TEMPERATURE CONTROL SCEHAMTIC OGONTE COACH DORM 39902-39911
9	R-04-1165	WIRING DIAGRAM SWITCH LOCKER COACH DORM 39900,39901
10	R-01-1024	TEMPERATURE CONTROL SCHEMATIC COACH 39940-39964
11	R-04-1026	WIRING DIAGRAM SWITCH LOCKER COACH 39940-39964
12	R-04-1036	ELECTRIC LOCKER WIRING DIAGRAM COACH 39940-39964
13	R-01-1038	HEAT WIRING SCHEMATIC COACH 39940-39964
14	R-01-1157	TEMPERATURE CONTROL SCHEMATIC OGONTZ COACH 39940-39964
15	R-04-1046	ELECTRIC LOCKER WIRING DIAGRAM LOUNGE 39970-39975

HERITAGE FLEET ELECTRICAL SCHEMATICS

	DRAWING NO.	TITLES/DESCRIPTION
16	R-01-1065	TEMPERATURE CONTROL SCHEMATIC LOUNGE 39970,72,75
17	R-04-1067 (1)	SWITCH LOCKER WIRING DIAGRAM LOUNGE 39970,72,75
18	R-04-1067 (2)	SWITCH LOCKER WIRING DIAGRAM LOUNGE 39973,74
19	R-04-1121	FOOD SERVICE EQUIPMENT CONDUIT AND WIRING LOUNGE 39970-39975
20	R-01-1139	TEMPERATURE CONTROL PANEL SCHEMATIC OGONTZ
21	R-01-1159	TEMPERATURE CONTROL SCHEMATIC OGONTZ 39973,39974
22	R-01-1178	TEMPERATURE CONTROL PANEL SCHEMATIC 39970-73,75

ELECTRICAL SCHEMATICS HERITAGE FLEET

SERIES 1126 - 9411

Amtrak

	DRAWING NO.	TITLES/DESCRIPTION
I		Table of Contents
II		Table of Contents
III		Table of Contents
1	D-04-414	Electrical and Electronic Symbols
2	D-07-601	A/C and Refrigeration Symbols
3	E-01-767	Temperature Control Schematic Bag Dorm 1610-1617, 1628-1637
4	E-01-1700	Temperature Control Schematic Bag Dorm 1618-1627
5	E-01-771	Temperature Control Schematic Slumber Coach 2050-2056, 2080-2097
6	E-01-770	Temperature Control Schematic Sleeper 2430-2482, 2871-2896, 2220-2222, 2230-2235
7	E-01-779	Temperature Control Schematic Lounge 3100-3127
8	E-01-768	Temperature Control Schematic Coach 4000-4026, 4600-4650, 4700-4742, 5000-5008, 7000-7007, 7600-7618
9	E-01-769	Temperature Control Schematic Diner 8500-8530
10	E-01-772	Temperature Control Schematic Diner (Kitchen) 8500-8530
11	E-01-7049	Temperature Control Schematic Dome 9400-9411
12	E-01-755	Heating and A/C Wiring Bag Dorm 1610-1613
13	E-01-860	Heating and A/C Wiring Bag Dorm 1614-1617
14	E-01-756	Heating and A/C Wiring Slumber Coach 2050-2056
15	E-01-861	Heating and A/C Wiring Slumber Coach 2080-2097
16	E-01-1673	Heating and A/C Wiring Sleeper 2430-2456
17	E-01-1677	Heating and A/C Wiring Sleeper 2457-2460
18	E-01-757	Heating and A/C Wiring Sleeper 2880-2883
19	E-01-862	Heating and A/C Wiring Schematic 2884-2894
20	E-01-758	Heating and A/C Wiring Lounge 3100-3105
21	E-01-863	Heating and A/C Wiring Lounge 3106-3112
22	E-01-759	Heating and A/C Wiring Coach 4600-4626
23	E-01-864	Heating and A/C Wiring Coach 4700-4739
24	E-01-754	Heating and A/C Wiring Diner 8500-8504
25	E-01-865	Heating and A/C Wiring Diner 8505-8510
26	E-01-700	Schematic Diagram A/C Control
27	D-01-750	Schematic Antifreeze - Water Protection
28	E-04-760	Antifreeze - Water Protection Installation
29	E-04-546	Antifreeze - Water Protection Installation
30	E-01-837	Lighting and Conv. Outlets Bag Dorm 1614-1617
31	E-01-724	Lighting and Conv. Outlets Slumbercoach 2050-2056
32	E-01-834	Lighting and Conv. Outlets Slumbercoach 2080-2097
33	E-01-1683	Lighting and Conv. Outlets 10/6 Sleeper HC 2430-2441
34	E-01-725	Lighting and Conv. Outlets 10/6 Sleeper 2880-2894
35	E-01-726	Lighting and Conv. Outlets Lounge 3100-3105
36	E-01-835	Lighting and Conv. Outlets Lounge 3106-3112
37	E-01-1685	Lighting and Conv. Outlets Coach 4000-4014

For single diagram copies contact:
Operation and Maintenance Department
National Railroad Passenger Corporation
400 North Capitol St., N.W.
Washington, D.C. 20001
202/733-2694

*For additional copies of this collection of schematics contact:
Supervisor Support Systems, Amtrak Technical Training Center
202 Garstang Street, Beech Grove, Indiana 46107
317/263-0465

ELECTRICAL SCHEMATICS HERITAGE FLEET

SERIES 1126-9411

Amtrak

	DRAWING NO.	TITLES/DESCRIPTION
38	E-01-706	Lighting and Conv. Outlet Coach 4600-4648
39	E-01-836	Lighting and Conv. Outlet Coach 4700-4739,
40	E-01-727	Lighting and Conv. Outlet Diner 8500-8508
41	E-01-1687	Lighting and Conv. Outlet Diner 8511-8530
42	E-01-526	Communication Trainline Schematic Sleeper, Coach and Bag Dorm 2880-2883, 4600-4626, 8600-8603
43	E-01-602	Communication Trainline Schematic
44	D-04-775	Public Address Wiring Diagram Bag Dorm and Sleeper
45	D-04-744	Public Address Wiring Diagram Lounge 3100-3127
46	D-04-737	Public Address Wiring Diagram Coach 4600-4650
47	D-04-774	Public Address Wiring Diagram Diner 8500-8530
48	D-01-524	Main Power Distribution 480V 3-Phase 60 HZ Schematic
49	D-01-717	Single Line Power Schematic Bag Dorm 1610-1613
50	D-01-880	Single Line Power Schematic Bag Dorm 1614-1617
51	D-01-718	Single Line Power Schematic Slumber Coach and Sleeper 2050-2056
52	D-01-719	Single Line Power Sleeper Cars 2880-2894
53	D-01-720	Single Line Power Lounge 3100-3105
54	D-01-521	Single Line Power Coach 4600-4650
55	D-01-721	Single Line Power Diner Car 8500-8530
56	D-01-7099	Lighting Schematic Dome Coach 9400-9408
57	D-01-7100	Lighting Schematic Buffet 8700-8704

	DRAWING NO.	TITLES/DESCRIPTION
58	D-04-751	AC and DC Power Supply Wiring 120V AC & 64V DC
59	D-01-7119	Knife Battery Charger
60	C-01-7118	McGraw Edison Battery Charger
61	D-00-539-1,2	Auxiliary Panel
62	R-04-761	Wiring Schematic Bag Dorm 1614-1617
63	R-04-763	Wiring Schematic Sleeper 2880-2883
64	E-04-657	Overhead Conduit and Wiring Coach 4600-4626
65	D-01-527-1,2	E-5 Decelostat Controller System
66	C-01-715	Gaylord Ventilator Control Diner 8500-8530
67	E-01-822	Schematic Wiring Load Data Lounge 3100-3111
68	E-01-821	Schematic Wiring Load Kitchen 8500-8508
69	D-5861	Buffet Car Electrical Schematic 8700-8704
70	D-01-538	System Schematic Diagram Food Service Power Diner
71	D-01-793	Refrigeration Schematic Evaporator Diner
72	D-01-794	Refrigeration Equipment Schematic Compressor/Condenser
73	D-01-1660	Refrigeration Equipment Schematic Compressor/Condenser
74	D-01-795	Refrigeration Schematic Evaporators Lounge
75	D-01-796	Refrigeration Equipment Schematic Compressor/Condenser
76	E-01-6139	Refrigeration Electrical Schematic 10001
77	300-901	TIA Oven Model 1536-5C 3100-3111

ELECTRICAL SCHEMATICS HERITAGE FLEET

SERIES 1126-9411

Amtrak

	DRAWING NO.	TITLES/DESCRIPTION
78	----------	Market Forge Convection Oven
79	AM-ES-12	Hobart Dishwasher Diner
80	D-01-673	Water Cooler Schematics
81	D-04-752	Wiring Diagram Water Heaters
82	C-04-669	Toilet Flush Wiring Schematics
83	E-04-916	Electric Locker Wiring Baggage Car - All Except 1300 Series
84	D-01-565	Temperature Control Schematic Baggage Car
85	D-01-716	Single Line Schematic Baggage Car 1126-1132, 1137-1138, 1140-1169, 1203-1272, 1175-1198
86	D-01-1710	Single Line Schematic Baggage Car 1128-1131, 1133-1136, 1139, 1170-1177
87	D-04-745	Public Address Wiring Diagram Baggage Cars, Bag Dorm
88	E-04-913	Electric Locker Wiring 1350-1379
89	E-01-911	Communication and Trainline Schematic 1350-1379
90	D-04-458	Communication and Trainline Schematic 1126-1177, 1203-1272
91	D-01-912	Single Line Power Schematic Baggage Car 1350-1379
92	D-01-915	Temperature Control Schematic Baggage Car 1350-1379
93	D-04-440	Sheet 1 of 14 Schematic Ledger and Car Number Tabulation
94	D-04-440	Sheet 2 of 14 Single Line Power Schematic 2900-2941
95	D-04-440	Sheet 3 of 14 Single Line Power Schematic 2980-2997
96	D-04-440	Sheet 4 of 14 480V Main Trainline Power Schematic
97	D-04-440	Sheet 5 of 14 Water System and Antifreeze Schematic
98	D-04-440	Sheet 6 of 14 Schematic Wiring A/C and Heating 2900-2997
99	D-04-440	Sheet 7 of 14 Floor Heat Schematic 2900-2941
100	D-04-440	Sheet 8 of 14 Floor Heat Schematic 2980-2997
101	D-04-440	Sheet 9 of 14 Auxiliary Circuits 2900-2941
102	D-04-440	Sheet 10 of 14 Auxiliary Circuits 2980-2997
103	D-04-440	Sheet 11 of 14 Lighting Schematic 2900-2941
104	D-04-440	Sheet 12 of 14 Lighting Schematic 2980-2997
105	D-04-440	Sheet 13 of 14 DC Systems Schematics
106	D-04-440	Sheet 14 of 14 Trainline Communications Schematics
107	D-01-473	Temperature Control Panel Sleeper 2900-2941, 2980-2997
108	E-00-474-1,2	Temperature Control Panel Sleeper 2900

DRAWING NUMBER D-04-414 REV D

BATTERY

AC VOLTAGE SOURCE

CURRENT SOURCE

AMMETER

VOLTMETER

INTERSECTION OF 2 WIRES NO CONNECTION

CONNECTION OF 2 WIRES

6.3A LINE AMPERES

PIN SOCKET DISCONNECT OR SOCKET CONNECTION

CONVENIENCE RECEPTACLE & PLUG

MINIATURE TWIST LOCK RECEPTACLE & PLUG

RECEPT PLUG TWIST LOCK RECEPTACLE & PLUG

HEATING CONTACTOR PANEL TERMINAL BLOCK TERMINAL

A/C STARTER PANEL TERMINAL BLOCK TERMINAL

TEMPERATURE CONTROL TERMINAL BLOCK TERMINAL

THERMOSTAT PLUG PIN

CONTROL PLUG PIN

PILOT LIGHT PLUG PIN

SPLICE

GENERAL TERMINAL BLOCK TERMINAL

N.C. N.O. SINGLE THROW SWITCH OR RELAY CONTACTS

DOUBLE THROW SWITCH OR RELAY CONTACTS

N.O. N.C. DOUBLE BREAK SWITCH OR RELAY CONTACTS FORM C

MECHANICALLY OPERATED (LIMIT) SWITCH FORM C

TIMING RELAY - DELAY FROM ENERGIZING FORM C

TIMING RELAY - DELAY FROM DEENERGIZING FORM C

5 SEC. SOLID STATE TIMER (INDICATE TIME & ACTION: eg CLOSES AFTER 5 SEC.)

PUSHBUTTON FORM C MAINTAINED

PULL SWITCH FORM C

ROTARY SWITCH (SELECTOR SWITCH)

JL LOCOMOTIVE CONTROL STAND SWITCH

AIR VANE SWITCH OPEN WITHOUT AIR FLOW

FLUID LEVEL SWITCH 2

PRESSURE SWITCH 1

THERMOSTAT 6 OPENS ON TEMP. RISE CLOSES ON TEMP. RISE

THERMOSTAT ADJUSTABLE 6

MERCURY THERMOSTAT (CLOSE ON RISE) WITH HEATER

FUSE D

CIRCUIT BREAKER (THERMO MAGNATIC) D

CIRCUIT BREAKER (MAGNATIC ONLY) D

GROUND FAULT CIRCUIT BREAKER D

CONTACTOR CONTACTS

MOTOR OVERLOAD HEATER D

SOLENOID VALVE

SINGLE PHASE TRANSFORMER B

TRANSFORMER, 3-PHASE DELTA (Δ) CONNECTED B

TRANSFORMER, 3-PHASE WYE (Y) CONNECTED B

TRANSFORMER, 3-PHASE WYE CONNECTED WITH GROUNDED NEUTRAL B

CHOKE (IRON CORE)

CHOKE (AIR CORE) OR RELAY COIL

SATURABLE TRANSFORMER

CURRENT TRANSFORMER

FIELD (SERIES) ARMATURE FIELD SHUNT DC MOTOR OR GENERATOR C

3 PHASE AC MOTOR C

1 PHASE AC MOTOR C

SHIELDED WIRE SHIELD

BREAKOUT OF WIRES FROM BUNDLE

AC AC BRIDGE RECTIFIER

DIODE

SILICON CONTROLLED RECTIFIER (SCR)

ZENER DIODE

SILICON CONTROLLED SWITCH (SCS)

SUPPRESSION DIODE

VARISTOR

PNP NPN TRANSISTOR

PHOTO TRANSISTOR

FIELD EFFECT TRANSISTOR

UNIJUNCTION TRANSISTOR

OP AMP

INTEGRATED CIRCUIT, GENERAL TYPE

CRYSTAL

EARTH GROUND

CARBODY (CHASSIS)

CAPACITOR (NON-POLARIZED)

ELECTROLYTIC CAPACITOR

CAPACITOR, VARIABLE

SIGNAL LIGHT

LIGHT EMITTING DIODE (LED)

INCANDESCENT LAMP

FLUORESCENT LAMP BALLAST

INVERTER BALLAST

HEATER

RESISTOR

THERMISTOR

RESISTOR, VARIABLE

POTENTIOMETER

BELL

HORN OR SPEAKER

BUZZER

MICROPHONE

REVISIONS				
LTR	ZONE	DESCRIPTION	DATE	APP'D
A		REVISED	3/9/01	
B		REVISED & REDRAWN	3/15/88	RF BRUSS
C		ADDED SHIELDED WIRE & MICROPHN	3/23/88	RF BRUSS
D		REVISED	3/24/93	RF BRUSS

NOTES:

A. SWITCHES, RELAYS, CONTACTORS, ETC. ARE SHOWN IN THE FOLLOWING CONDITION UNLESS OTHERWISE NOTED:
1. PRESSURE SWITCHES: SYSTEM IN A PERFECT VACUUM
2. FLOAT SWITCHES: SYSTEM EMPTY
3. LIMIT, MICRO, AIR VANE, AND PUSHBUTTON SWITCHES: AT REST - NOTHING PRESSING AGAINST ACTIVATOR
4. KEY SWITCH: KEY REMOVED, OFF OR CLOSE POSITION, IF APPLICABLE
5. ROTARY & TOGGLE SWITCH: OFF POSITION
6. THERMOSTATS: AT ZERO DEGREES F.
7. RELAYS & CONTACTORS: WITH COIL NOT ENERGIZED
8. CURRENT SHOWN IN A BOX ALONG A WIRE IS THE FULL LOAD CURRENT.

B. GIVE VOLTAGES OF EACH WINDING, PLUS INDIVIDUAL TRANSFORMER RATING.
C. GIVE HP & RPM
D. GIVE TRIP VALUE.
E. GIVE VOLTAGE & AMP HOUR CAPACITY

QTY/CAR	USED ON

REFERENCE DRAWINGS:

EQUIPMENT ENGINEERING
Amtrak
National Railroad Passenger Corporation
400 N Capitol St., Washington, D.C. 20001

TITLE: ELECTRICAL & ELECTRONIC SYMBOLS

DR. OTEELE APP'D: M.E. DeMiss APP'D: APP'D FOR ISSUE: 6/16/93
CK'D: APP'D: APP'D: 2-16-93
SCALE: ~ DRAWING NO. D-04-414 REV. D

MICROFILM RATIO 24X

24X

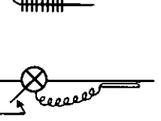

EVAPORATOR COIL

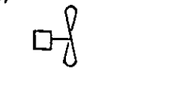

EXPANSION VALVE

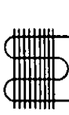

FAN

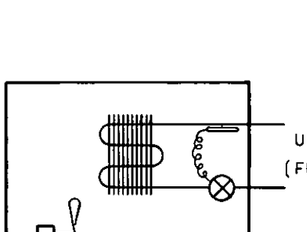

TYPICAL COMPLETE EVAPORATOR (REFRIGERATION)

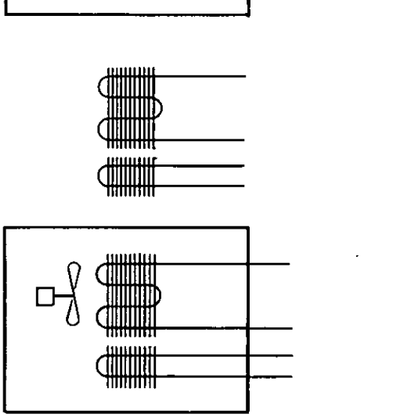

TYPICAL COMPLETE EVAPORATOR (A.C.)

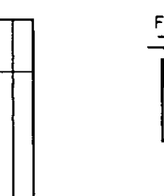

CONDENSER COIL

SUBCOOLER

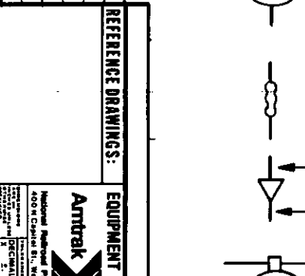

COMPLETE CONDENSOR ONE OR TWO FANS

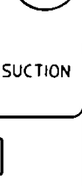

SUCTION ACCUMULATOR

SUCTION FILTER

VIBRATION ELIMINATOR

REDUCER (PIPE SIZE)

COMPRESSOR (REFRIGERATION)

TYPICAL COMPRESSOR (A.C.)

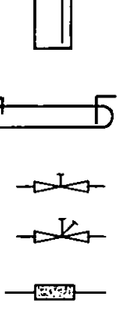

RECEIVERS

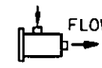

SHUT OFF VALVE

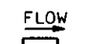

CHARGING VALVE

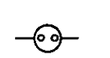

FILTER DRIER (REFRIGERATION)

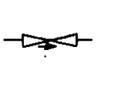

FILTER DRIER (A.C.)

STRANER

SIGHT GLASS/ MOISTURE INDICATOR

CHECK VALVE

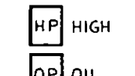

HEAT EXCHANGER

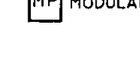

DAMPER OPPERATOR (FREON OPPERATED CYLINDER)

GAUGE

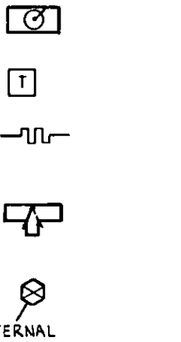

PRESSURE SWITCHES

CONDENSOR FAN

SERVICE SWITCH

DEFROST TIMER

THERMOSTAT

HEATER DEFROST DRAIN PAN OR CRANKCASE

3 WAY VALVE

DISCHARGE BYPASS VALVE

QTY/CAR

USED ON

REFERENCE DRAWINGS:

EQUIPMENT ENGINEERING

Amtrak

National Railroad Passenger Corporation
400 N Capitol St. Washington, D.C. 20001

TITLE: A/C & REFRIGERATION SYMBOLS

SCALE: NONE

DRAWING NO. D-07-601

SHEET 1 OF 1

APPD FOR ISSUE

DATE 4/1/91

REV A

REVISIONS				
LTR	ZONE	DESCRIPTION	DATE	APP'D
A	C-2	ADDED SYMBOL	5/1/91	
	A-B	ADDED NAME		

D-07-601
REV A

REVISIONS				
LTR	ZONE	DESCRIPTION	DATE	APP'D
A	3-C	REVISED ZONE 3 C, ADDED NOTES 1 & 2	6-17-94	
B	C-1	ADDED BAGGAGE OVERHEAD HEAT.		
	ALL	REVISED FLOOR HEAT WIRING.		
		REMOVED NOTE 2.		
C	C3	GENERAL CORRECTIONS	12/14	
	C3	SWITCH AC-H WAS WIRED TO 'X'		
	C3	01 HW WAS WIRED TO 'W'		
	C3	P NA WIRED TO C-REL		
D	B5	REMOVED WARNING LT CELL# ICEMS	1/20/95	
	D7	REMOVED SWITCH 5534		
	C3	MADE 1 LINE DOWN 1 LINE EACH		
	B5	ADDED LIGHT FM3		
E		ADDED NEW CAR SERIES	4/1/96 PER	
F		ADDED LABELS, CORRECTED 704 701 TO 6070 & 6080 ADDED FHTDR ADDED TRANE & TDT	3/4/97	R.F. BRUNO

NOTES

1. CRL44 RELAY: ONCE IT IS PICKED UP, IT WILL HOLD IN MAGNETICALLY TO RESET, CURRENT IS REVERSED THRU COIL THEREBY DROPPING IT OUT.

LEGEND

SWITCH POSITION	L	OFF	N
CONTACT NUMBER			
1			X
2			X
22			X
23A	X		
23B			X
24	X		

(55) SELECTOR SWITCH TARGET DIAGRAM
X = CLOSED

P.S.G./VAPOR/OGONTZ

- TEMPERATURE CONTROL PANEL POWER CONNECTIONS
- TEMPERATURE CONTROL PANEL THERMOSTAT CONNECTIONS

CAR WIRING

- TERMINAL BOARD POWER TERM.
- TERMINAL BOARD THERMOSTAT TERM

SAFETY / TRANE

- A/C CONTROL PANEL AND HEATING CONT
- A/C PRESSURE CONTROL (AT COMPRESSOR)
- AUXILIARY PANEL

CARS 1628-96 ONLY (RAM HEAT)

REFERENCE DRAWINGS: D-00-801	EQUIPMENT ENGINEERING Amtrak	TEMPERATURE CONTROL SCHEMATIC WIRING BAGGAGE DORMITORY	
1628-37 1610-17 QTY-CAR USED ON		E-01-767	F

E-21 10 F

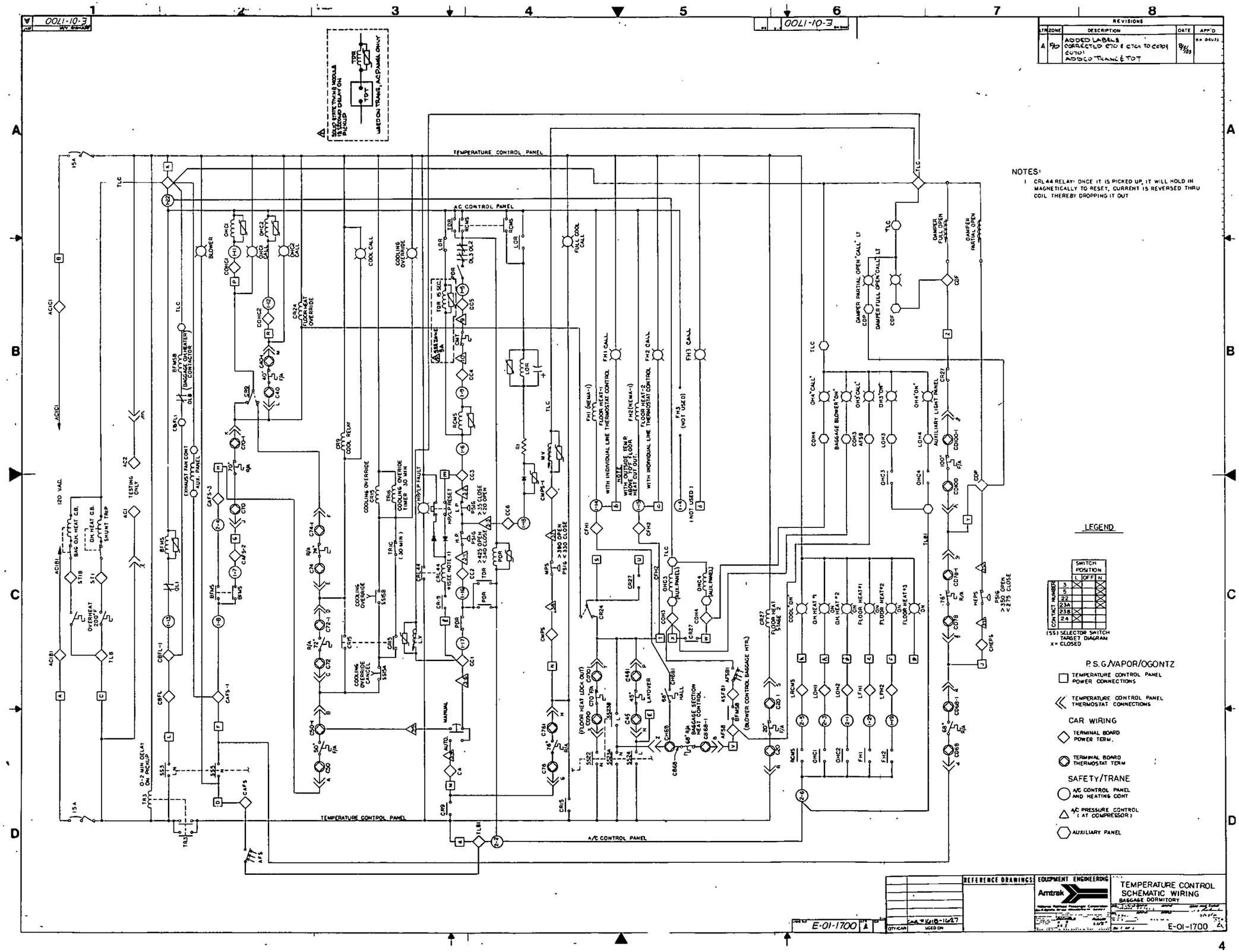

E-01-1700
REVISIONS
LTR ZONE DESCRIPTION DATE APP'D
A F/D ADDED LABELS CORRECTED C70 & C701 TO C0701 C0701 ADDED TRANE & TOT
NOTES:
1 CRL44 RELAY: ONCE IT IS PICKED UP, IT WILL HOLD IN MAGNETICALLY TO RESET, CURRENT IS REVERSED THRU COIL THEREBY DROPPING IT OUT
LEGEND
SWITCH POSITION
L OFF N
CONTACT NUMBER
3
5
22
23A
23B
24
(SS) SELECTOR SWITCH TARGET DIAGRAM
X = CLOSED
P.S.G./VAPOR/OGONTZ
TEMPERATURE CONTROL PANEL POWER CONNECTIONS
TEMPERATURE CONTROL PANEL THERMOSTAT CONNECTIONS
CAR WIRING
TERMINAL BOARD POWER TERM.
TERMINAL BOARD THERMOSTAT TERM
SAFETY/TRANE
A/C CONTROL PANEL AND HEATING CONT
A/C PRESSURE CONTROL (AT COMPRESSOR)
AUXILIARY PANEL
TEMPERATURE CONTROL PANEL
A/C CONTROL PANEL
REFERENCE DRAWINGS:
EQUIPMENT ENGINEERING
Amtrak
TEMPERATURE CONTROL SCHEMATIC WIRING
BAGGAGE DORMITORY
E-01-1700

REVISIONS				
LTR	ZONE	DESCRIPTION	DATE	APP'D
A	C-2 D-7 C-5	SWITCH AF5 WAS BETWEEN CAF5-4 AND 1-8, CONNECTED 555 TO DISCONNECT 4, REMOVED 5534, REVISED FLOOR HEAT CONTACTOR PANEL TRANE-MOD REVISED ZONE C-3, ADDED NOTES 1&2	4/6/84	EF BEVANS
B	B-7 C-7	WIRE BETWEEN 'CDF'O & 'CDF'O WAS BETWEEN Z'O & 'CDF'O 'CDP'O WAS 'V'O.& ADDED NEW 'V'	7/5/84 TLB	EF BEVANS 7/19/84
C	B-5	REMOVED WARNING LT, CRL44 & CR145	7/24/84	JCC
D		ADDED NEW CAR SERIES. DELETED NOTE 2	7/24/85 MB	CRANE-TS
E		ADDED LABELS CORRECTED C701 TO CO7O & C0701 ADDED FH1 DR ADDED TRANE & TEST	8/14/85	R BEVANS

NOTES:

1. CRL44 RELAY: ONCE IT IS PICKED UP, IT WILL HOLD IN MAGNETICALLY TO RESET, CURRENT IS REVERSED THRU COIL THEREBY DROPPING IT OUT.

LEGEND

CONTACT NUMBER	SWITCH POSITION L	OFF	H
3	X		
5			X
22	X		
23A			X
23B	X		
24			X

(55) SELECTOR SWITCH TARGET DIAGRAM
X = CLOSED

P.S.G./VAPOR/OGONTZ

- TEMPERATURE CONTROL PANEL POWER CONNECTIONS
- TEMPERATURE CONTROL PANEL THERMOSTAT CONNECTIONS

CAR WIRING

- TERMINAL BOARD POWER TERM.
- TERMINAL BOARD THERMOSTAT TERM

SAFETY/TRANE

- A/C CONTROL PANEL AND HEATING CONT
- A/C PRESSURE CONTROL (AT COMPRESSOR)
- AUXILIARY PANEL

REFERENCE DRAWINGS	REFERENCE DRAWINGS	EQUIPMENT ENGINEERING	TITLE
CAR # 2050-2053 = 2080-2088 = 2054-56 = 2089-95 = 2096-97		Amtrak	TEMPERATURE CONTROL SCHEMATIC WIRING SLUMBER COACH CARS

E-01-771 E

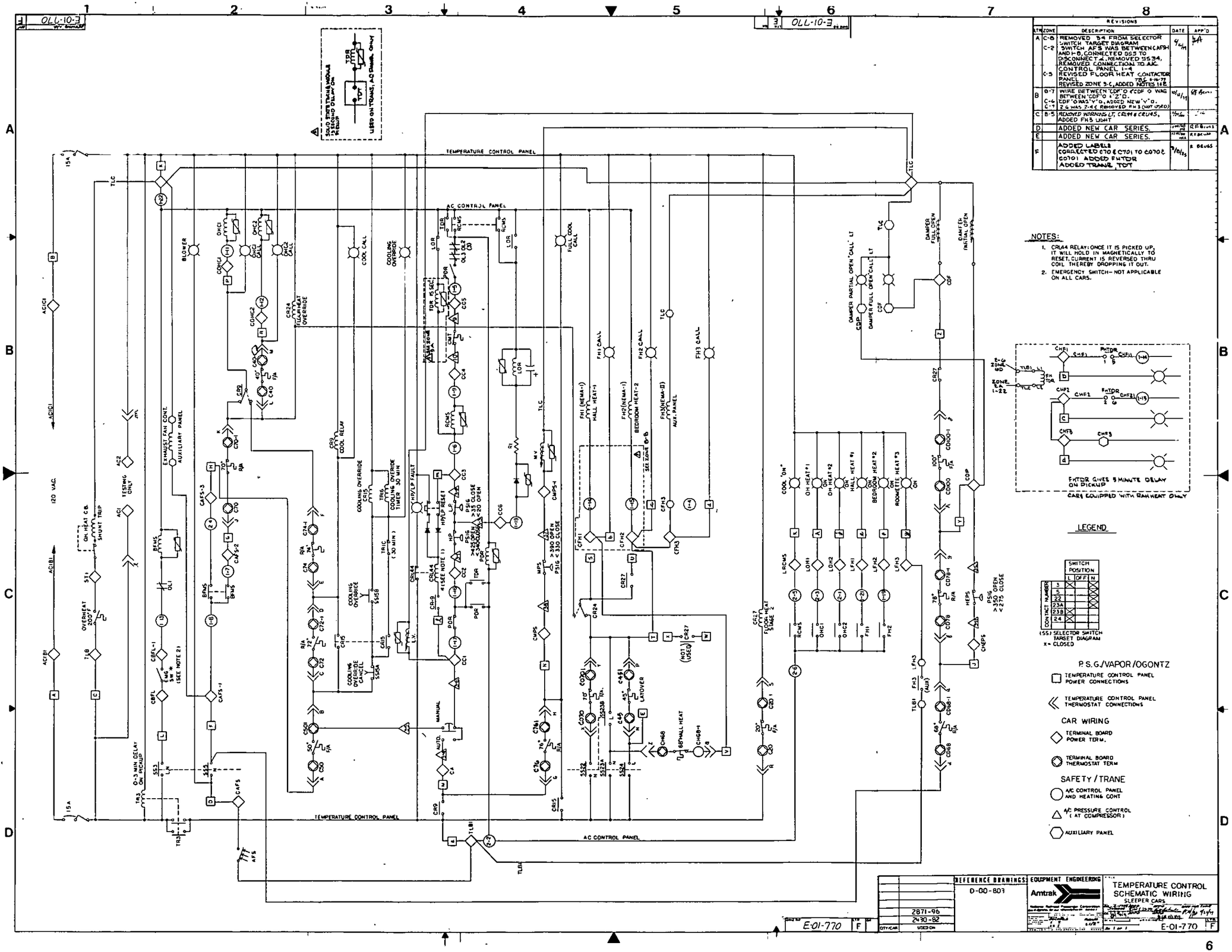
REVISIONS
LTR ZONE DESCRIPTION DATE APP'D
A C-8 REMOVED 3-4 FROM SELECTOR SWITCH TARGET DIAGRAM. SWITCH AF5 WAS BETWEEN CAF5-1 AND 1-8, CONNECTED 555 TO DISCONNECT 4, REMOVED 3534, REMOVED CONNECTION TO A/C CONTROL PANEL 1-4 REVISED FLOOR HEAT CONTACTOR PANEL 754 6-16-72 REVISED ZONE 3-C, ADDED NOTES 1 & 2
C-2
C-5
B D-7 WIRE BETWEEN CDF-O & CDF-O WAS BETWEEN CDF-O 1"2"O. 10/21/74
C-6 CDF WAS "Y" O, ADDED NEW "Y" O.
C-7 2 & WAS 2-4 & REMOVED FH 3 (NOT USED)
C B-5 REMOVED WARNING LT, CR24 & CR44S, ADDED FH 3 JUMPER 4/14/76
D ADDED NEW CAR SERIES.
E ADDED NEW CAR SERIES.
F ADDED LABELS CORRECTED C70 & C70-1 TO C070 & C070-1 C0701 ADDED FHTDR ADDED TRANS. TDT 9/16/85
TEMPERATURE CONTROL PANEL
AC CONTROL PANEL
NOTES:
1. CR24 RELAY: ONCE IT IS PICKED UP, IT WILL HOLD IN MAGNETICALLY TO RESET, CURRENT IS REVERSED THRU COIL THEREBY DROPPING IT OUT.
2. EMERGENCY SWITCH - NOT APPLICABLE ON ALL CARS.
FHTDR GIVES 5 MINUTE DELAY ON PICKUP
CARS EQUIPPED WITH RAM HEAT ONLY
LEGEND
SWITCH POSITION L OFF N
CONTACT NUMBER 1 2 22 23A 23B 24
(SS) SELECTOR SWITCH TARGET DIAGRAM
X = CLOSED
P.S.G./VAPOR/OGONTZ
TEMPERATURE CONTROL PANEL POWER CONNECTIONS
TEMPERATURE CONTROL PANEL THERMOSTAT CONNECTIONS
CAR WIRING
TERMINAL BOARD POWER TERM.
TERMINAL BOARD THERMOSTAT TERM
SAFETY / TRANE
A/C CONTROL PANEL AND HEATING CONT
A/C PRESSURE CONTROL (AT COMPRESSOR)
AUXILIARY PANEL
REFERENCE DRAWINGS: D-00-803
EQUIPMENT ENGINEERING
Amtrak
TEMPERATURE CONTROL SCHEMATIC WIRING SLEEPER CARS
2871-96
2430-82
E-01-770 F
E-01-770 F

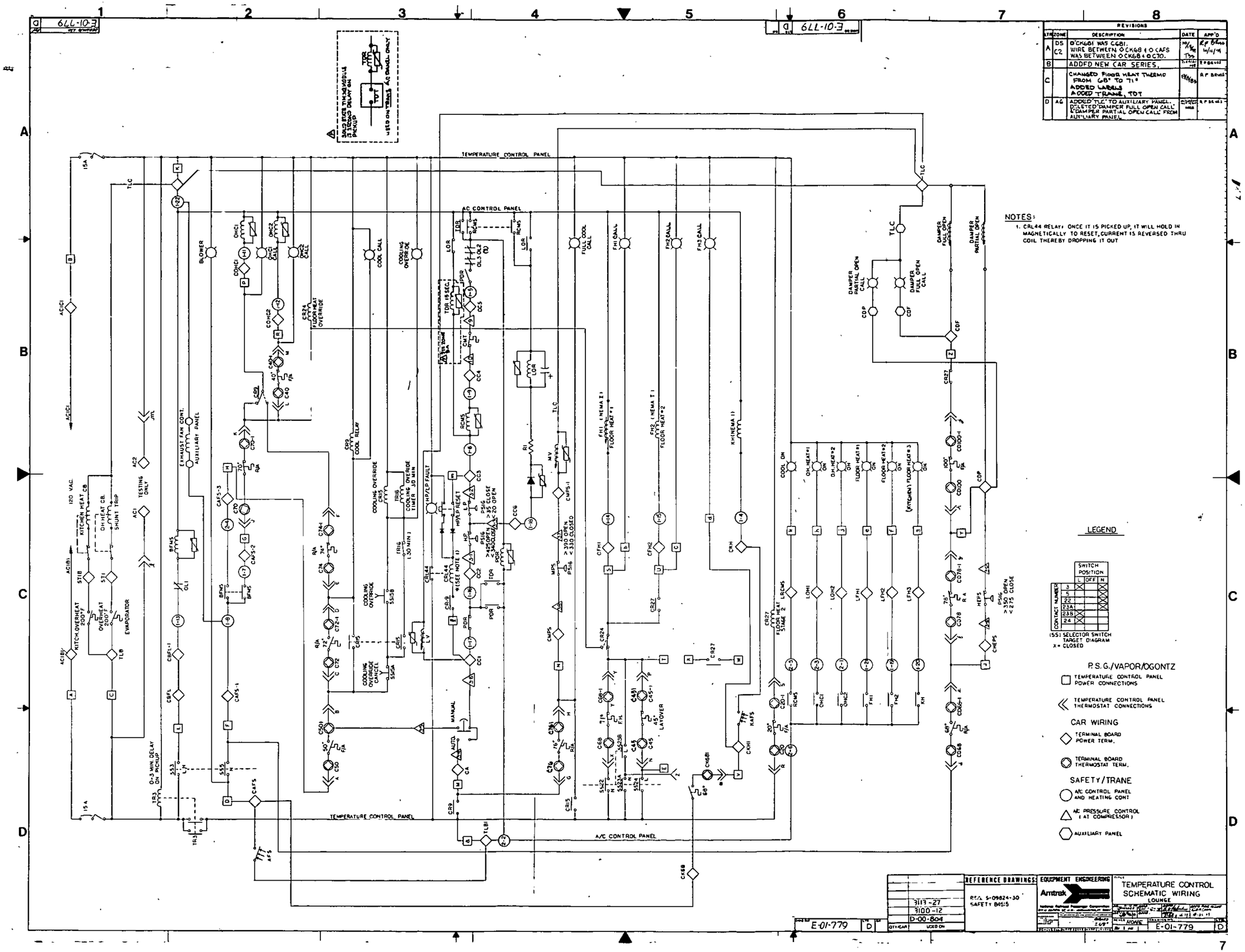

REVISIONS				
LTR	ZONE	DESCRIPTION	DATE	APP'D
A	D5 C2	O'CK681 WAS C681. WIRE BETWEEN O CK68 & O CAFS WAS BETWEEN O CK68 & O C70.	10/13/79 T33	R P BRUSS 10/11/79
B		ADDED NEW CAR SERIES.	7/24/80	R P BRUSS
C		CHANGED FLOOR HEAT THERMO FROM 68° TO 71° ADDED LABELS ADDED TRANE, TOT	8/8/83	R P BRUSS
D	AG	ADDED "TLC" TO AUXILIARY PANEL. DELETED "DAMPER FULL OPEN CALL" & "DAMPER PARTIAL OPEN CALL" FROM AUXILIARY PANEL	8/24/83	R P BRUSS

NOTES:

1. CRL44 RELAY: ONCE IT IS PICKED UP, IT WILL HOLD IN MAGNETICALLY TO RESET, CURRENT IS REVERSED THRU COIL THEREBY DROPPING IT OUT

LEGEND

CONTACT NUMBER	SWITCH POSITION L	OFF	N
3	X		X
5			X
22			X
23A			X
23B	X		
24	X		

(SS) SELECTOR SWITCH TARGET DIAGRAM
X = CLOSED

P.S.G./VAPOR/OGONTZ

- TEMPERATURE CONTROL PANEL POWER CONNECTIONS
- TEMPERATURE CONTROL PANEL THERMOSTAT CONNECTIONS

CAR WIRING

- TERMINAL BOARD POWER TERM.
- TERMINAL BOARD THERMOSTAT TERM.

SAFETY/TRANE

- A/C CONTROL PANEL AND HEATING CONT
- A/C PRESSURE CONTROL (AT COMPRESSOR)
- AUXILIARY PANEL

QTY/CAR	USED ON
	3113-27
	3100-12
	D-00-804

REFERENCE DRAWINGS: R.E.A. S-09824-30 SAFETY 84515

EQUIPMENT ENGINEERING — Amtrak — National Railroad Passenger Corporation

TITLE: TEMPERATURE CONTROL SCHEMATIC WIRING LOUNGE

SCALE: NONE — E-01-779 — D

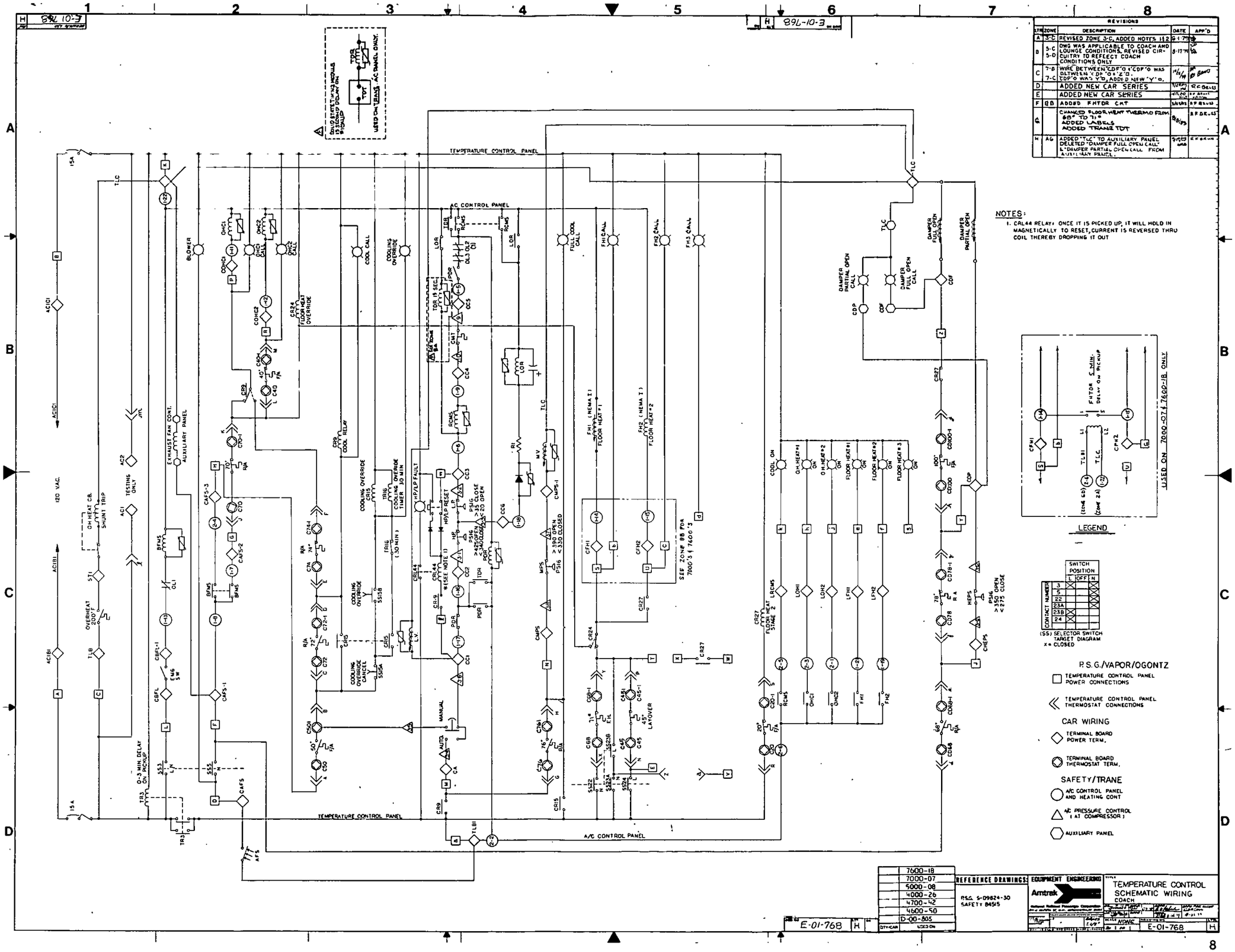

NOTES:

1. CRL44 RELAY: ONCE IT IS PICKED UP, IT WILL HOLD IN MAGNETICALLY TO RESET, CURRENT IS REVERSED THRU COIL THEREBY DROPPING IT OUT

REVISIONS

LTR	ZONE	DESCRIPTION	DATE	APP'D
A	3-C	REVISED ZONE 3-C, ADDED NOTES 1 & 2	6-1-79	
B	5-C 5-D	DWG WAS APPLICABLE TO COACH AND LOUNGE CONDITIONS. REVISED CIRCUITRY TO REFLECT COACH CONDITIONS ONLY	8-17-79	
C	7-B 7-C	WIRE BETWEEN "CDF"O & "CDF"O WAS BETWEEN "CDF"O & "Z"O. CDF"O WAS "Y"O, ADDED NEW "Y"O.	10/6/79	
D		ADDED NEW CAR SERIES	9/24/80	
E		ADDED NEW CAR SERIES	4/1/80	
F	8B	ADDED FHTOR CKT	5/14/81	
G		CHANGED FLOOR HEAT THERMO FROM 68° TO 71° ADDED LABELS ADDED TRANS TDT	8/18/83	
H	A6	ADDED "TLC" TO AUXILIARY PANEL DELETED "DAMPER FULL OPEN CALL" & "DAMPER PARTIAL OPEN CALL" FROM AUXILIARY PANEL.	9/15/83	

	7600-18
	7000-07
	5000-08
	4000-26
	4700-42
	4600-50
	D-00-805
DTY/CAR	USED ON

REFERENCE DRAWINGS: P.S.G. S-09824-30 SAFETY 84515

EQUIPMENT ENGINEERING
Amtrak
National Railroad Passenger Corporation

TITLE: TEMPERATURE CONTROL SCHEMATIC WIRING COACH

SCALE: NONE

E-01-768 H

REVISIONS				
ST	ZONE	DESCRIPTION	DATE	APP'D
A		REVISED ZONE 3C, ADDED NOTES #2, ADDED WIRE #6 TWF "N" & "AND" #55	5/14/71	VA
B	C4	GENERAL CORRECTIONS	6/14/71	R.F. Bruns
	C6	D "4" WAS 3		
	D3	D "5-6" WAS C-4		
	C8	D "C-D" WAS C-D "G-D" WAS C-D		
	C2	REMOVED EMERGENCY SWITCH		
	B2	REMOVED SWITCH AFS		
		REMOVED EXHAUST FAN CONT.		
C	B5	REMOVED WARNING LT, CRL44 & CRL45	11/1/71	
	D7	REMOVED SWITCH S556		
D		ADDED NEW CAR SERIES.	9/26/01	E.F. BRUNS
		DELETED NOTE 2.		
E		ADDED NEW CAR SERIES.	2/28/02	
F		CHANGED FLOOR HEAT FROM 60°TO 71°, ADDED LABLES, CONNECTED C27 "Y" TO W8 L.P.H.S FROM 1-18 TO 1-20, ADDED FHTDR, ADDED TRANE TDT, 8529-30	6/6/02	R.F. BRUNS

△ SOLID STATE TIMING MODULE (1 SECOND DELAY ON) USED ON TRANE A/C SYSTEMS ONLY

TEMPERATURE CONTROL PANEL

AC CONTROL PANEL

NOTES:

1. CRL44 RELAY: ONCE IT IS PICKED UP, IT WILL HOLD IN MAGNETICALLY TO RESET, CURRENT IS REVERSED THRU COIL THEREBY DROPPING IT OUT.

CARS EQUIPPED WITH RAH HEAT ONLY

LEGEND

(SS) SELECTOR SWITCH TARGET DIAGRAM
x = CLOSED

CONTACT NUMBER	SWITCH POSITION L	OFF	H
3	x		x
5			x
22			x
23A	x		
23B	x		
24			x

P.S.G./VAPOR/OGONTZ

- TEMPERATURE CONTROL PANEL POWER CONNECTIONS
- TEMPERATURE CONTROL PANEL THERMOSTAT CONNECTIONS

CAR WIRING

- TERMINAL BOARD POWER TERM.
- TERMINAL BOARD THERMOSTAT TERM

SAFETY/TRANE

- A/C CONTROL PANEL AND HEATING CONT
- A/C PRESSURE CONTROL (AT COMPRESSOR)
- AUXILIARY PANEL

REFERENCE DRAWINGS: D-00-806

REFERENCE DRAWINGS:

8529-30
8500-28
USED ON

EQUIPMENT ENGINEERING — Amtrak

TEMPERATURE CONTROL SCHEMATIC WIRING DINER CARS

E-01-769 F

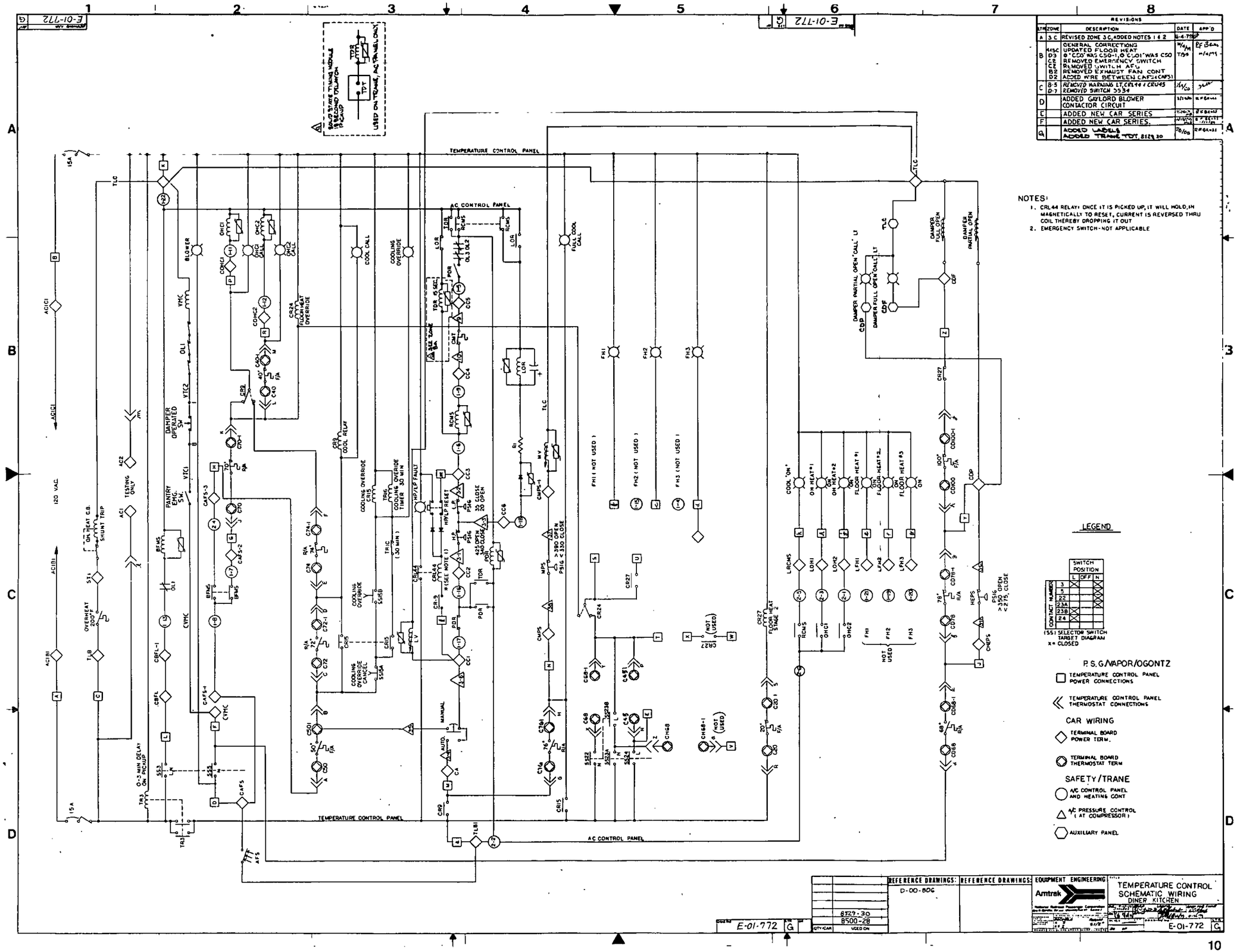

REVISIONS				
LTR	ZONE	DESCRIPTION	DATE	APP'D
A	3 C	REVISED ZONE 3 C, ADDED NOTES 1 & 2	6-4-79	
B	4 & 5 C D3 C2 C2 B2 D2	GENERAL CORRECTIONS UPDATED FLOOR HEAT 0" CDO" WAS C50-1, 0 CL01" WAS C50 REMOVED EMERGENCY SWITCH REMOVED SWITCH AFG REMOVED EXHAUST FAN CONT ADDED WIRE BETWEEN CAFS & CAFS1	11/4/79	RF Brown
C	B-5 D-7	REMOVED WARNING LT, CRL44 & CRL45 REMOVED SWITCH SS34	1/5/80	
D		ADDED GAYLORD BLOWER CONTACTOR CIRCUIT	3/21/80	RF Brown
E		ADDED NEW CAR SERIES	7/26/80	RF Brown
F		ADDED NEW CAR SERIES.	11/10/80	RF Brown
G		ADDED LABELS ADDED TRANE TDT, 8529-30	7/8/80	RF Brown

NOTES:

1. CRL44 RELAY: ONCE IT IS PICKED UP, IT WILL HOLD, IN MAGNETICALLY TO RESET, CURRENT IS REVERSED THRU COIL THEREBY DROPPING IT OUT
2. EMERGENCY SWITCH-NOT APPLICABLE

LEGEND

CONTACT NUMBER	SWITCH POSITION L	OFF	N
3	X		X
5			X
22			X
23A			X
23B	X		
24	X		

(SS) SELECTOR SWITCH TARGET DIAGRAM
X= CLOSED

P.S.G./VAPOR/OGONTZ

- TEMPERATURE CONTROL PANEL POWER CONNECTIONS
- TEMPERATURE CONTROL PANEL THERMOSTAT CONNECTIONS

CAR WIRING

- TERMINAL BOARD POWER TERM.
- TERMINAL BOARD THERMOSTAT TERM

SAFETY/TRANE

- A/C CONTROL PANEL AND HEATING CONT
- A/C PRESSURE CONTROL (AT COMPRESSOR)
- AUXILIARY PANEL

QTY/CAR	USED ON
	8529-30
	8500-28

REFERENCE DRAWINGS: D-00-806

REFERENCE DRAWINGS:

EQUIPMENT ENGINEERING
Amtrak

TEMPERATURE CONTROL SCHEMATIC WIRING
DINER KITCHEN

E-01-772 G

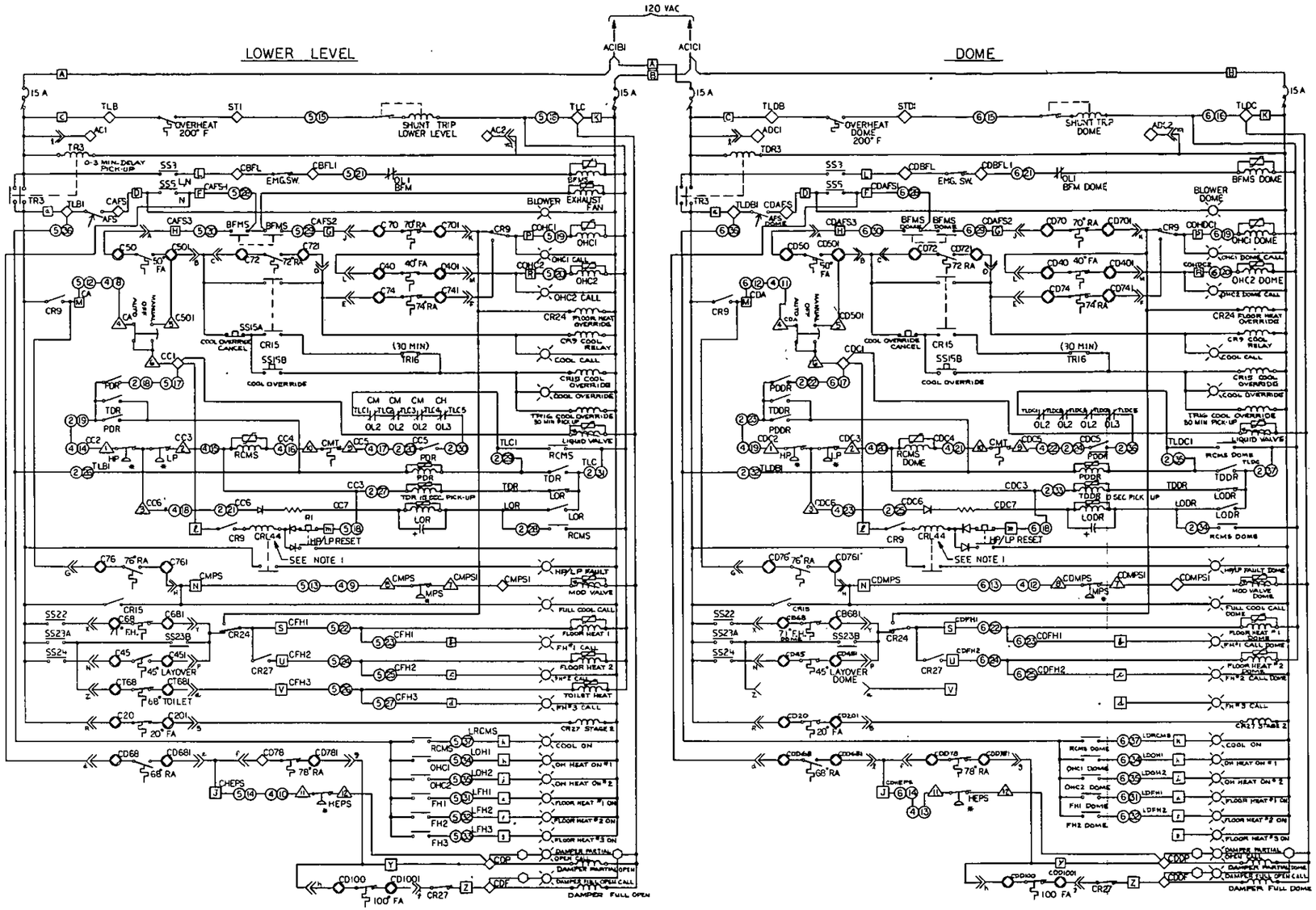

NOTE:
1) CRL44 RELAY LATCHING RELAY

CONTACT NUMBER	POSITION L	OFF	N
3	X		X
5			X
22			X
23A			X
23B	X		
24	X		

KEY:

- □ — TEMP. CONTROL PANEL POWER CONNECTIONS
- ≪ — TEMP. CONTROL PANEL THERMOSTAT CONNECTIONS
- ◇ — TERM. BOARD POWER TERMINAL
- ⬡ — TERM. BOARD THERMOSTAT TERM.
- △ — A/C PRESSURE CONTROL (AT COMR)
- ○ — AUXILIARY PANEL
- ○○ — 480 V PANEL PLUG

* PRESSURE SWITCH VALUES

	OPEN	CLOSE
HP	>425	<340
LP	<20	>35
MPS	>390	<330
HEPS	>350	<275

QTY	PART NUMBER	DESCRIPTION	MATERIAL	MFG/SPEC	P/L ITEM NO	ITEM

LIST OF MATERIAL

REFERENCE DRAWINGS

9407-11
9400-06

QTY/CAR | USED ON

DO NOT SCALE DRAWING

EQUIPMENT ENGINEERING
Amtrak

TITLE: TEMPERATURE CONTROL SCHEMATIC (H.E.P. VISTADOME)

E-01-7049

MICROFILM RATIO 30 X

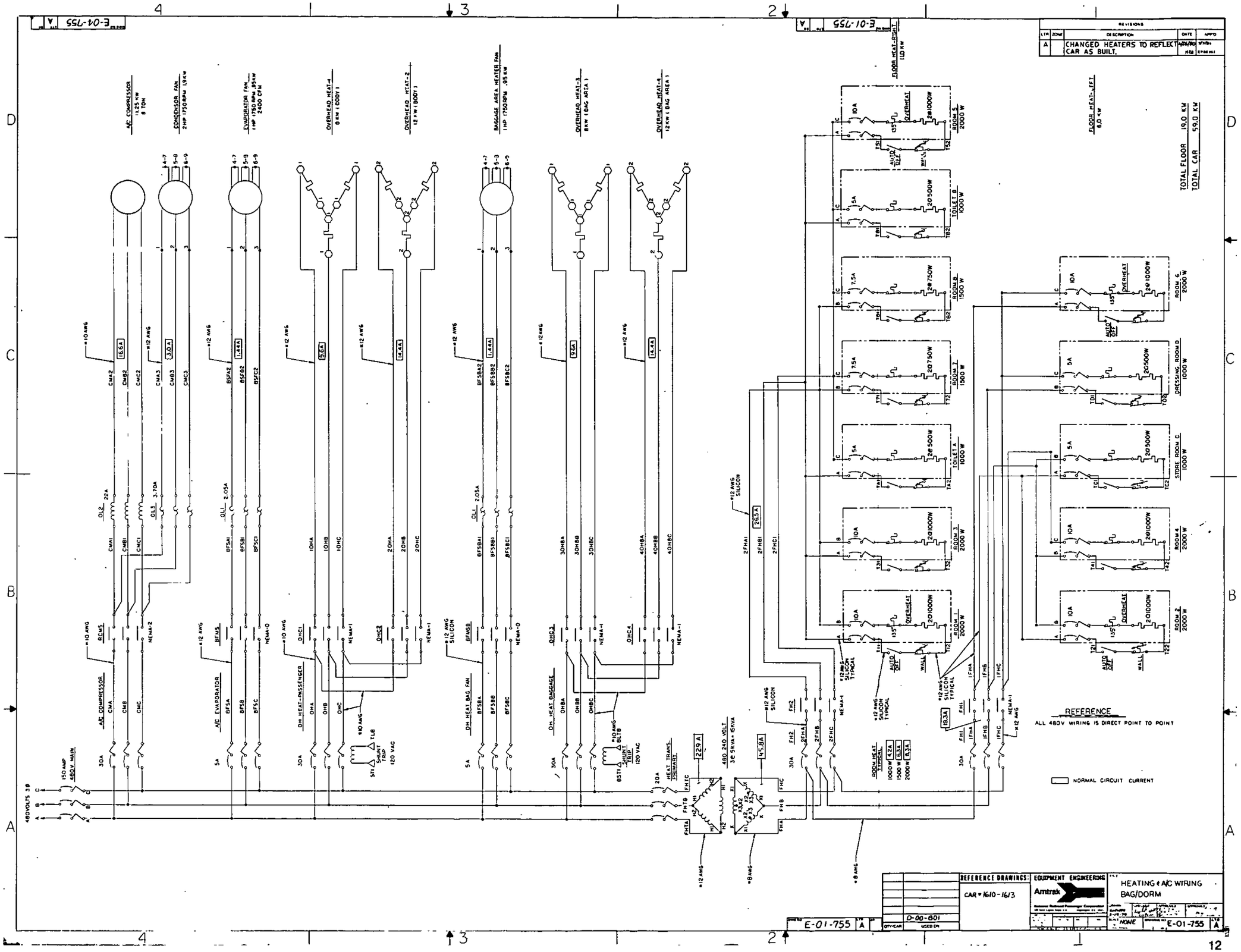

REVISIONS
LTR ZONE DESCRIPTION DATE APP'D
A CHANGED HEATERS TO REFLECT CAR AS BUILT.
A/C COMPRESSOR 11.25 KW 8 TON
CONDENSOR FAN 2 HP 1750 RPM 1.9 KW
EVAPORATOR FAN 1 HP 1750 RPM .95 KW 2400 CFM
OVERHEAD HEAT-1 8 KW (BODY)
OVERHEAD HEAT-2 12 KW (BODY)
BAGGAGE AREA HEATER FAN 1 HP 1750 RPM .95 KW
OVERHEAD HEAT-3 8 KW (BAG AREA)
OVERHEAD HEAT-4 12 KW (BAG AREA)
FLOOR HEAT-RIGHT 11.0 KW
FLOOR HEAT-LEFT 8.0 KW
TOTAL FLOOR 19.0 KW
TOTAL CAR 59.0 KW
ROOM 5 2000 W
TOILET B 1000 W
ROOM 8 1500 W
ROOM 7 1500 W
TOILET A 1000 W
ROOM 3 2000 W
ROOM 1 2000 W
ROOM 6 2000 W
DRESSING ROOM D 1000 W
STORE ROOM C 1000 W
ROOM 4 2000 W
ROOM 2 2000 W
A/C COMPRESSOR
A/C EVAPORATOR
OH HEAT-PASSENGER
OH HEAT BAG FAN
OH HEAT BAGGAGE
HEAT TRANS. PRIMARY
480 240 VOLT 3Ø 5KVA = 15KVA
ROOM HEAT TYPICAL
REFERENCE
ALL 480V WIRING IS DIRECT POINT TO POINT
NORMAL CIRCUIT CURRENT
REFERENCE DRAWINGS:
CAR # 1610-1613
EQUIPMENT ENGINEERING
Amtrak
HEATING & A/C WIRING BAG/DORM
E-01-755
D-00-801

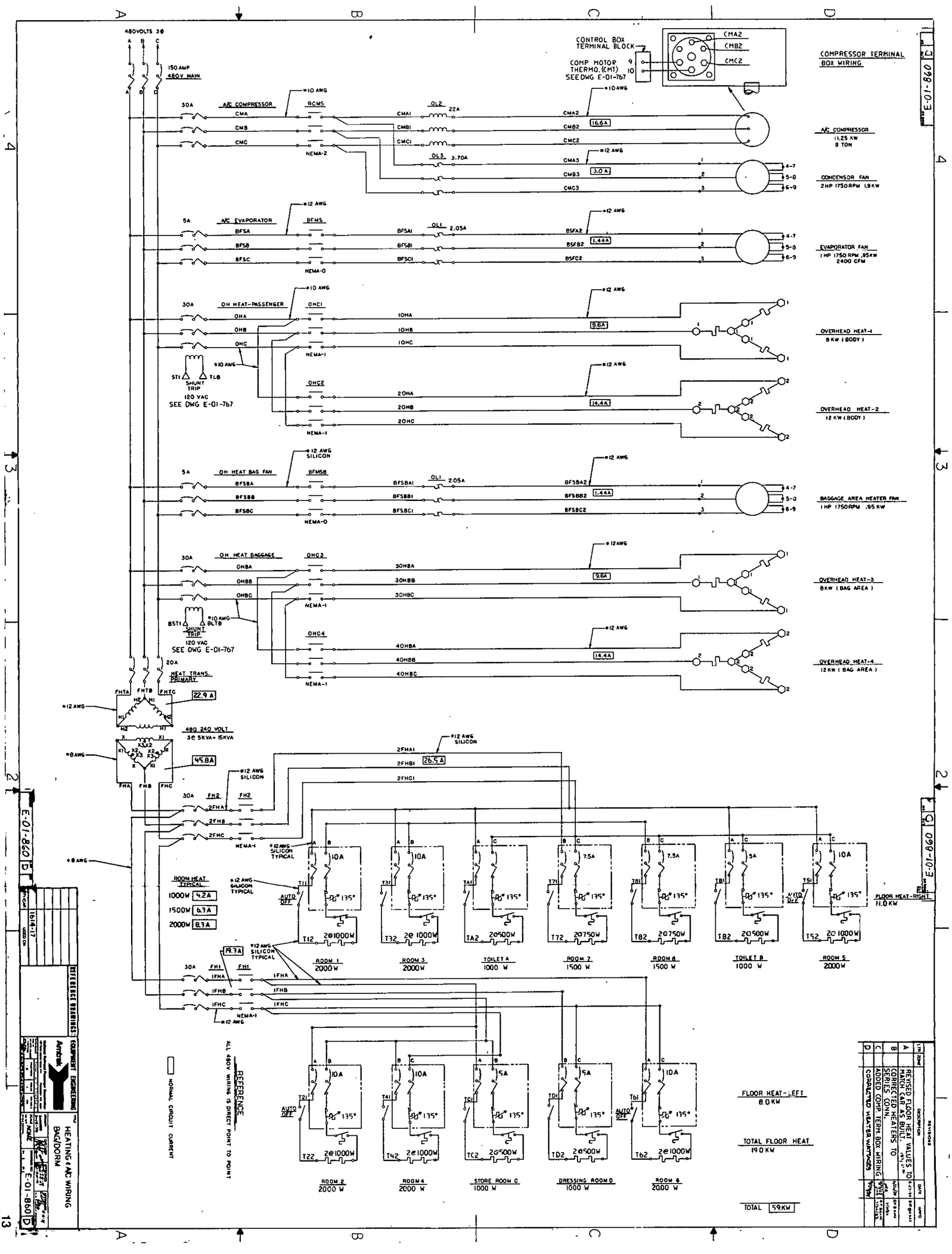

480VOLTS 3Ø
150 AMP 480V MAIN
CONTROL BOX TERMINAL BLOCK
COMP MOTOR THERMO. (CMT) SEE DWG E-01-767
COMPRESSOR TERMINAL BOX WIRING
A/C COMPRESSOR
11.25 KW 8 TON
CONDENSOR FAN
2HP 1750RPM 1.9KW
A/C EVAPORATOR
EVAPORATOR FAN
1HP 1750 RPM .95KW 2400 CFM
OH HEAT-PASSENGER
OVERHEAD HEAT-1
8KW (BODY)
OVERHEAD HEAT-2
12 KW (BODY)
SHUNT TRIP
120 VAC
SEE DWG E-01-767
OH HEAT BAG FAN
BAGGAGE AREA HEATER FAN
1HP 1750RPM .95 KW
OH HEAT BAGGAGE
OVERHEAD HEAT-3
8KW (BAG AREA)
OVERHEAD HEAT-4
12KW (BAG AREA)
HEAT TRANS. PRIMARY
480 240 VOLT
3Ø 5KVA= 15KVA
ROOM HEAT TYPICAL
1000W 4.2A
1500W 6.3A
2000W 8.3A
FLOOR HEAT-RIGHT 11.0KW
ROOM 1 2000W
ROOM 3 2000W
TOILET A 1000 W
ROOM 7 1500 W
ROOM 8 1500 W
TOILET B 1000 W
ROOM 5 2000W
ROOM 2 2000 W
ROOM 4 2000 W
STORE ROOM C 1000 W
DRESSING ROOM D 1000 W
ROOM 6 2000 W
FLOOR HEAT-LEFT 8.0KW
TOTAL FLOOR HEAT 19.0KW
TOTAL 59KW
REFERENCE
ALL 480V WIRING IS DIRECT POINT TO POINT
NORMAL CIRCUIT CURRENT
REFERENCE DRAWINGS
EQUIPMENT ENGINEERING
Amtrak
HEATING & A/C WIRING BAG/DORM
E-01-860
REVISED FLOOR HEAT VALUES TO MATCH CAR AS BUILT.
CORRECTED HEATERS TO SERIES CONN.
ADDED COMP. TERM. BOX WIRING
CORRECTED HEATER WATTAGES

E-01-756

REVISIONS				
LTR	ZONE	DESCRIPTION	DATE	APPD
A		MOTOR'S KW WAS 1000 W, NOS 6,9,2, 7,4,4,3,C,1,5,8,3,11 WERE 12KW OTH TOILET WAS 850 W	4/4/84	
B		ADDED COMP. TERM. BOX WIR. NO.	11/2/93	
C		CHG WIRE SIZE FOR #6,9,2,8,4,10,5,8 FROM #8 AWG TO #6 AWG, A,C,1,5,8,3,10,5 FROM #8 AWG TO #6 AWG	3-30-94	

COMPRESSOR TERMINAL BOX WIRING

CONTROL BOX TERMINAL BLOCK

COMP. MOTOR THERMOSTAT SEE DWG E-01-768

AC COMPRESSOR 11.25 KW @ TON

CONDENSER FAN 2HP 1750 RPM 1.9 KW

EVAPORATOR FAN 1HP 1750 RPM 95 KW 2400 CFM

OVERHEAD HEAT -1 8 KW

OVERHEAD HEAT -2 12 KW

FLOOR HEAT LEFT 11,475 W NOM.

FLOOR HEAT RIGHT 11,475 W NOM.

TOTAL 43KW NOM.

480 VAC 3Φ

150A MAIN

A/C COMPRESSOR / CONDENSER 30A

EVAPORATOR 5A

OH HEAT 30A

FLOOR HEAT LEFT 50A

FLOOR HEAT RIGHT 50A

60A HEAT TRANS PRIMARY

480/240V 3Φ 15KVA - 45KVA

TLB SHUNT TRIP 120 VAC USES 15A DWG E-01-768

TYPICAL HEATER CURRENT

WATTAGE	CURRENT
250	1.2 NOM
690	2.9 NOM
890	3.5 NOM
1000	4.2

REFERENCE

ALL 480V WIRING IS DIRECT POINT TO POINT

NORMAL CIRCUIT CURRENT

NOTE:
RAH (RAY CHEM AIR HEATER) UNITS ARE SELF-LIMITING
HEATER CURRENT (WATTAGE) CHANGES WITH AIR TEMP
HEATERS EXPERIENCE LARGE INRUSH REACHING STEADY VALUE WITHIN 5 MINUTES.

		REFERENCE DRAWINGS:	EQUIPMENT ENGINEERING
2050-56			Amtrak
D-00-802			

TITLE: HEATING & A/C WIRING SLUMBER COACH

SCALE: NONE

DRAWING NO. E-01-756 C

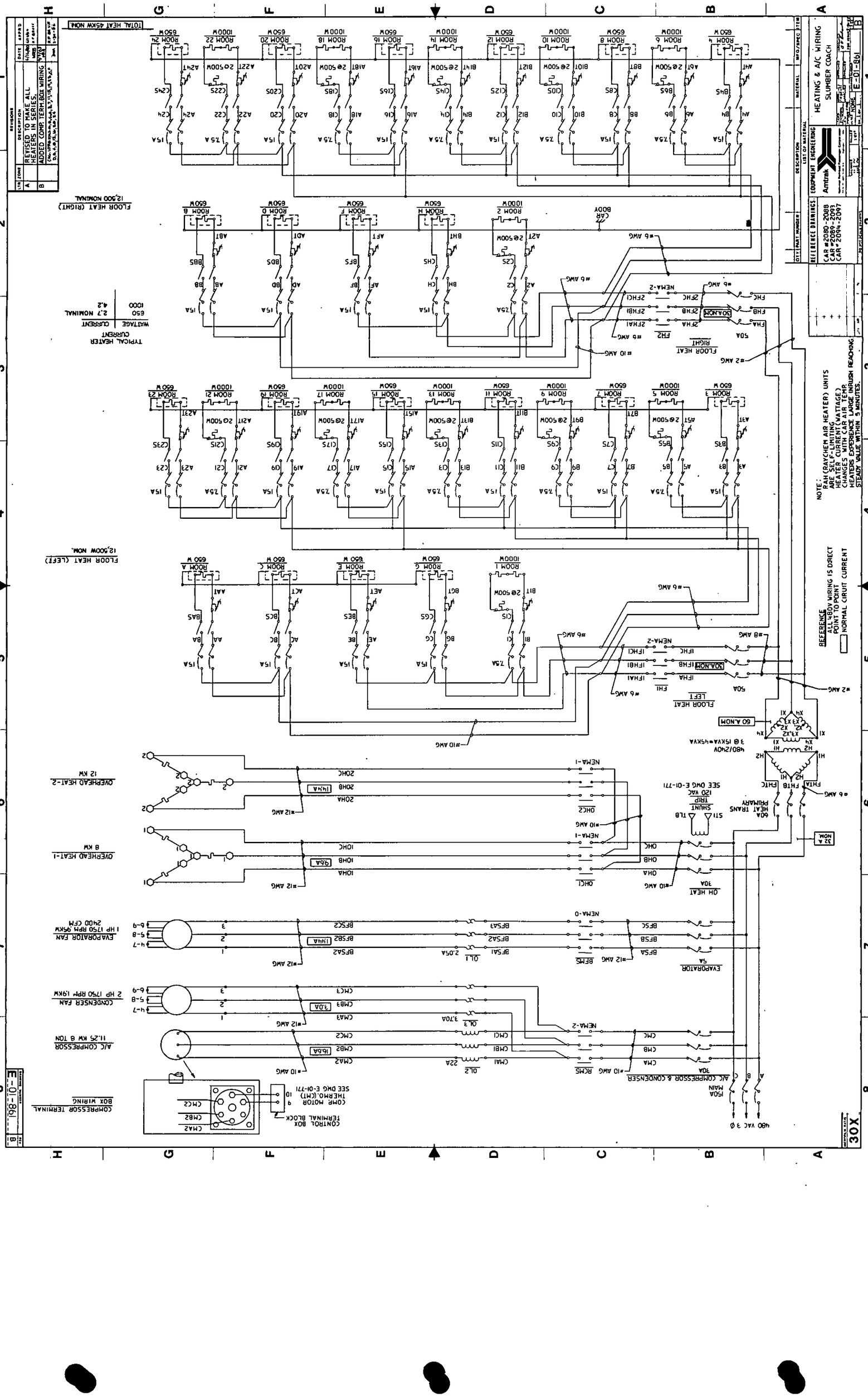
HEATING & A/C WIRING
SLUMBER COACH
Amtrak
EQUIPMENT ENGINEERING
E-01-86
REVISED TO MAKE ALL HEATERS IN SERIES.
ADDED COMP. TERM. BOX WIRING
REFERENCE DRAWINGS
CAR #2080-2088
CAR #2089-2093
CAR #2094-2097
TOTAL HEAT 45KW NOM.
FLOOR HEAT (RIGHT)
12,500 NOMINAL
FLOOR HEAT (LEFT)
12,500W NOM.
TYPICAL HEATER CURRENT
WATTAGE CURRENT
650 2.7 NOMINAL
1000 4.2
NOTE:
RAH (RAYCHEM AIR HEATER) UNITS ARE SELF-LIMITING (REDUCE CURRENT WITH WATTAGE). CHANGES WITH CAR AIR TEMP. HEATERS EXPERIENCE LARGE INRUSH REACHING STEADY VALUE WITHIN 5 MINUTES.
REFERENCE
ALL 480V WIRING IS DIRECT POINT TO POINT
NORMAL CIRCUIT CURRENT
FLOOR HEAT RIGHT
FLOOR HEAT LEFT
50A NOM
60 A.NOM
480/240V
3 Ø 15KVA=45KVA
OVERHEAD HEAT-2
12 KW
OVERHEAD HEAT-1
8 KW
60A HEAT TRANS PRIMARY
SHUNT TRIP
120 VAC
SEE DWG E-01-771
OH HEAT
30A
EVAPORATOR FAN
1 HP 1750 RPM 95KW
2400 CFM
EVAPORATOR
5A
CONDENSER FAN
2 HP 1750 RPM 19KW
A/C COMPRESSOR
11.25 KW 8 TON
A/C COMPRESSOR & CONDENSER
30A
150A MAIN
480 VAC 3 Ø
COMPRESSOR TERMINAL BOX WIRING
CONTROL BOX TERMINAL BLOCK
COMP. MOTOR THERMO.(CMT)
SEE DWG E-01-771
E-01-86
30X

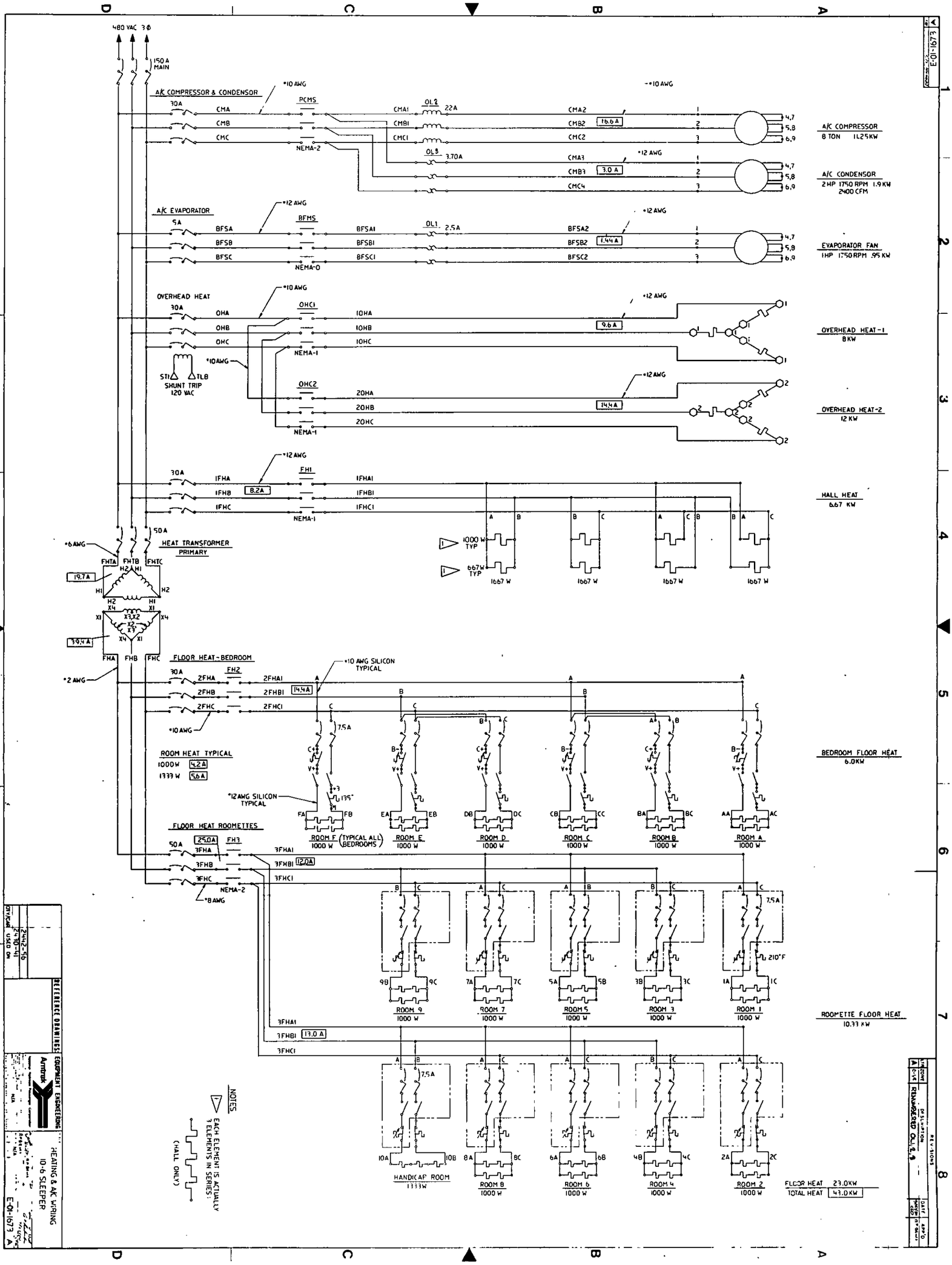
480 VAC 3Φ
150 A MAIN
A/C COMPRESSOR & CONDENSOR
*10 AWG
30A
CMA
CMB
CMC
PCMS
NEMA-2
CMA1
CMB1
CMC1
OL2
22A
OL3
3.70A
CMA2
CMB2
16.6 A
CMC2
CMA3
CMB3
3.0 A
CMC4
*12 AWG
A/C COMPRESSOR
8 TON 11.25KW
A/C CONDENSOR
2 HP 1750 RPM 1.9 KW
2400 CFM
A/C EVAPORATOR
5A
BFSA
BFSB
BFSC
BFMS
NEMA-0
BFSA1
BFSB1
BFSC1
OL1 2.5A
BFSA2
BFSB2
1.44 A
EVAPORATOR FAN
1HP 1750 RPM .95 KW
OVERHEAD HEAT
OHA
OHB
OHC
OHC1
NEMA-1
10HA
10HB
10HC
9.6 A
OVERHEAD HEAT-1
8KW
STA
TLB
SHUNT TRIP
120 VAC
OHC2
20HA
20HB
20HC
14.4 A
OVERHEAD HEAT-2
12 KW
FH1
IFHA
IFHB
IFHC
8.2A
IFHA1
IFHB1
IFHC1
HALL HEAT
6.67 KW
1000 W TYP
667W TYP
1667 W
*6 AWG
50A
HEAT TRANSFORMER PRIMARY
FHTA
FHTB
FHTC
19.7A
39.4A
FHA
FHB
FHC
*2 AWG
FLOOR HEAT-BEDROOM
FH2
2FHA
2FHB
2FHC
2FHA1
2FHB1
2FHC1
14.4A
*10 AWG SILICON TYPICAL
7.5A
ROOM HEAT TYPICAL
1000W 4.2A
1333 W 5.6A
*12AWG SILICON TYPICAL
135°
FA
FB
EA
EB
DB
DC
CB
CC
BA
BC
AA
AC
ROOM F 1000 W (TYPICAL ALL BEDROOMS)
ROOM E 1000 W
ROOM D 1000 W
ROOM C 1000 W
ROOM B 1000 W
ROOM A 1000 W
BEDROOM FLOOR HEAT
6.0KW
FLOOR HEAT ROOMETTES
25.0A
FH3
3FHA
3FHB
3FHC
3FHA1
3FHB1
3FHC1
12.0A
*8 AWG
9B
9C
7A
7C
5A
5B
3B
3C
1A
1C
210°F
ROOM 9 1000 W
ROOM 7 1000 W
ROOM 5 1000 W
ROOM 3 1000 W
ROOM 1 1000 W
ROOMETTE FLOOR HEAT
10.33 KW
13.0 A
10A
10B
8A
8C
6A
6B
4B
4C
2A
2C
HANDICAP ROOM 1333W
ROOM 8 1000 W
ROOM 6 1000 W
ROOM 4 1000 W
ROOM 2 1000 W
FLOOR HEAT 23.0KW
TOTAL HEAT 43.0KW
NOTES
EACH ELEMENT IS ACTUALLY 3 ELEMENTS IN SERIES.
(HALL ONLY)
E-01-1673
E-01-1673 A
REFERENCE DRAWINGS
EQUIPMENT ENGINEERING
HEATING & AC WIRING
10-6 SLEEPER
REVISIONS
REMARKED OL's 1 & 2
DESCRIPTION
DATE
APP'D
16

E-01-1677

LTR	ZONE	DESCRIPTION	DATE	APP'D
A		REVISED HEATER PHASING.		
B	F-12	RENUMBERED OL1,2,3		

A/C COMPRESSOR
8 TON 11.25KW

A/C CONDENSOR
2 HP 1750 RPM 1.9KW
2400 CFM

EVAPORATOR FAN
1HP 1750RPM .95 KW

OVERHEAD HEAT-1
8 KW

OVERHEAD HEAT-2
12 KW

HALL HEAT
6.67 KW

BEDROOM FLOOR HEAT
6.0KW

ROOMETTE FLOOR HEAT
9.43 KW

FLOOR HEAT 22.1KW
TOTAL HEAT 142.1 KW

*YP ROOMETTES

*10 AWG
*12 AWG
*8 AWG
*10 AWG SILICON TYPICAL
*12AWG SILICON TYPICAL
*8AWG

480 VAC 3Ø

150 A MAIN

A/C COMPRESSOR & CONDENSOR 30A
A/C EVAPORATOR 5A
OVERHEAD HEAT 30A
HALL HEAT 30A
HEAT TRANSFORMER PRIMARY 50A
FLOOR HEAT-BEDROOM FH2 30A
FLOOR HEAT ROOMETTES FH3 50A

OL2 22A
OL3 3.70A
OL1 2.5A

CMA2 16.6A
CMA3 3.0A
BFSA2 1.44A
9.6A
1.44A
8.2A
18.6A
37.1A
22.7A
14.4A
11.9A
10.8A

ROOM HEAT TYPICAL
900W 3.8A
1000W 4.2A
1333W 5.6A

1000 W TYP
667 W TYP

ROOM 1 1000 W
ROOM 2 900 W
ROOM 3 900 W
ROOM 4 900 W
ROOM 5 900 W
ROOM 6 900 W
ROOM 7 900 W
ROOM 8 900 W
ROOM 9 900 W
ROOM E 1000 W
ROOM F (TYPICAL ALL BEDROOMS) 1000 W
HANDICAP ROOM 1333W

7.5A TYP BEDROOMS
7.5A
5.0A
2.0A

NEMA-2
NEMA-1
NEMA-0

RCMS
BFMS
OHC1
OHC2
FH1

TLB SHUNT TRIP 120 VAC

NOTES

▽ EACH ELEMENT IS ACTUALLY 3 ELEMENTS IN SERIES:

(HALL ONLY)

REFERENCE DRAWINGS:

EQUIPMENT ENGINEERING

Amtrak

HEATING & A/C WIRING
10-6 SLEEPER

2447-60
CITY/CAR USED ON

E-01-1677 B

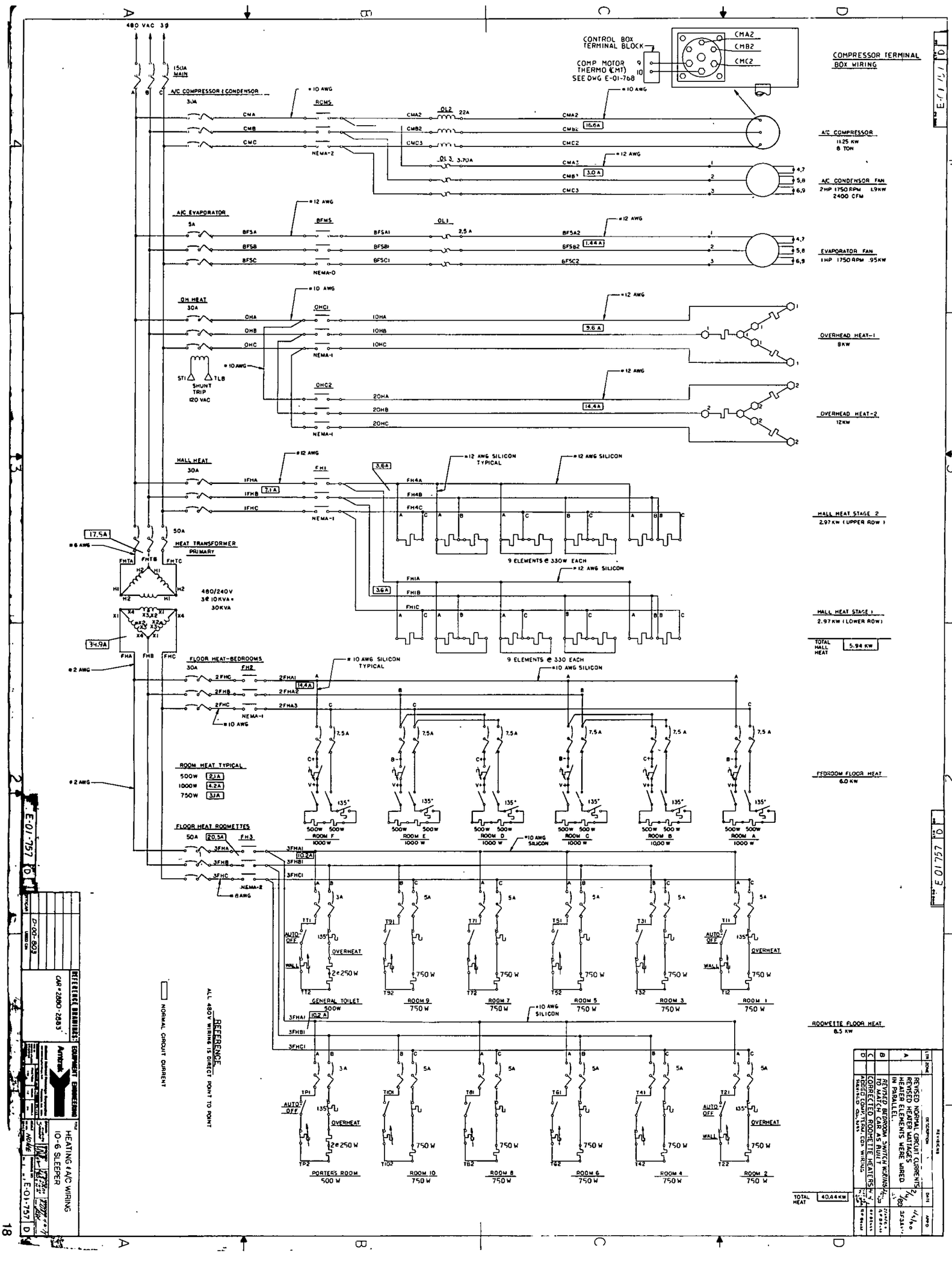

480 VAC 3Ø
150A MAIN
A/C COMPRESSOR & CONDENSOR
30A
CONTROL BOX TERMINAL BLOCK
COMP MOTOR THERMO (CMT) SEE DWG E-01-768
COMPRESSOR TERMINAL BOX WIRING
A/C COMPRESSOR 11.25 KW 8 TON
A/C CONDENSOR FAN 2HP 1750 RPM 1.9KW 2400 CFM
A/C EVAPORATOR
5A
EVAPORATOR FAN 1HP 1750 RPM .95KW
OH HEAT
30A
OVERHEAD HEAT-1 8KW
OVERHEAD HEAT-2 12KW
SHUNT TRIP 120 VAC
HALL HEAT
30A
HALL HEAT STAGE 2 2.97 KW (UPPER ROW)
HALL HEAT STAGE 1 2.97 KW (LOWER ROW)
TOTAL HALL HEAT 5.94 KW
HEAT TRANSFORMER PRIMARY
480/240V 3Ø 10KVA = 30KVA
9 ELEMENTS @ 330W EACH
9 ELEMENTS @ 330 EACH
FLOOR HEAT-BEDROOMS
30A
ROOM HEAT TYPICAL
500W 2.1A
1000W 4.2A
750W 3.1A
FEDROOM FLOOR HEAT 6.0 KW
FLOOR HEAT ROOMETTES
50A
ROOM F 1000 W
ROOM E 1000 W
ROOM D 1000 W
ROOM C 1000 W
ROOM B 1000 W
ROOM A 1000 W
GENERAL TOILET 500W
ROOM 9 750 W
ROOM 7 750 W
ROOM 5 750 W
ROOM 3 750 W
ROOM 1 750 W
ROOMETTE FLOOR HEAT 8.5 KW
PORTERS ROOM 500 W
ROOM 10 750 W
ROOM 8 750 W
ROOM 6 750 W
ROOM 4 750 W
ROOM 2 750 W
TOTAL HEAT 40.44 KW
REFERENCE
ALL 480V WIRING IS DIRECT POINT TO POINT
NORMAL CIRCUIT CURRENT
REVISED NORMAL CIRCUIT CURRENTS
REVISED HEATER WATTAGES
HEATER ELEMENTS WERE WIRED IN PARALLEL.
REVISED BEDROOM SWITCH WIRING TO MATCH CAR AS BUILT
CORRECTED ROOMETTE HEATERS
REFERENCE DRAWINGS: EQUIPMENT ENGINEERING
CAR #2880-2883
HEATING & A/C WIRING
10-6 SLEEPER
E-01-757 D

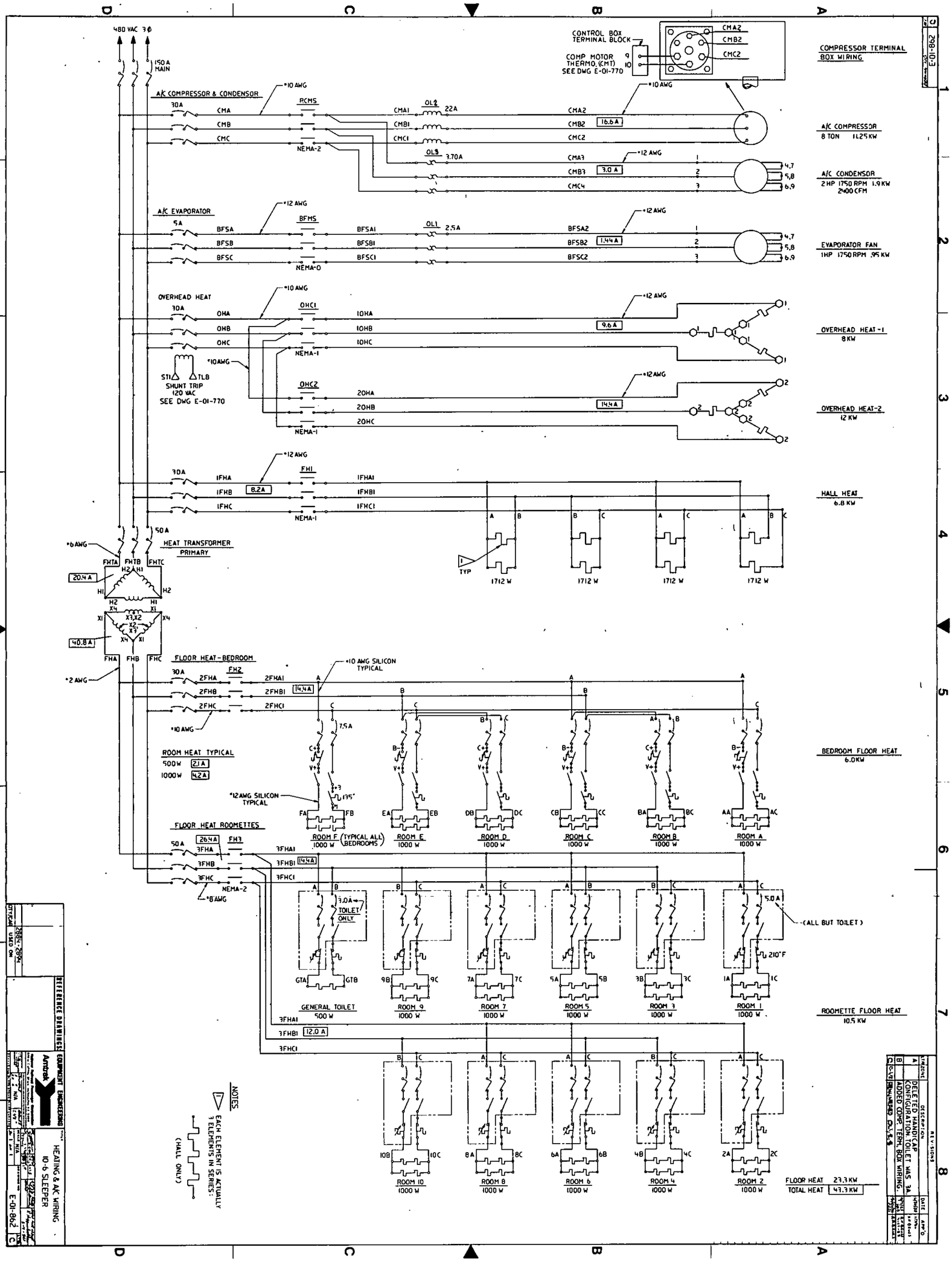
480 VAC 3Ø
150 A MAIN
A/C COMPRESSOR & CONDENSOR
*10 AWG
30A
CMA
CMB
CMC
PCMS
NEMA-2
CMA1
CMB1
CMC1
OL2
22A
OL3
3.70A
CMA2
CMB2
CMC2
16.6 A
CMA3
CMB3
CMC4
3.0 A
*12 AWG
CONTROL BOX TERMINAL BLOCK
COMP MOTOR THERMO. (CMT) SEE DWG E-01-770
COMPRESSOR TERMINAL BOX WIRING
A/C COMPRESSOR 8 TON 11.25 KW
A/C CONDENSOR 2 HP 1750 RPM 1.9 KW 2400 CFM
A/C EVAPORATOR
5A
BFSA
BFSB
BFSC
BFMS
NEMA-0
BFSA1
BFSB1
BFSC1
OL1
2.5A
BFSA2
BFSB2
BFSC2
1.44 A
EVAPORATOR FAN 1HP 1750 RPM .95 KW
OVERHEAD HEAT
OHA
OHB
OHC
OHC1
NEMA-1
10HA
10HB
10HC
9.6 A
OVERHEAD HEAT-1 8 KW
ST1
TLB
SHUNT TRIP 120 VAC
SEE DWG E-01-770
OHC2
20HA
20HB
20HC
14.4 A
OVERHEAD HEAT-2 12 KW
IFHA
IFHB
IFHC
FH1
8.2A
IFHA1
IFHB1
IFHC1
HALL HEAT 6.8 KW
TYP
1712 W
50 A
HEAT TRANSFORMER PRIMARY
*6 AWG
FHTA
FHTB
FHTC
20.4 A
40.8 A
FHA
FHB
FHC
*2 AWG
FLOOR HEAT-BEDROOM
2FHA
2FHB
2FHC
FH2
2FHA1
2FHB1
2FHC1
14.4A
*10 AWG SILICON TYPICAL
ROOM HEAT TYPICAL
500 W 2.1A
1000 W 4.2A
7.5A
*12 AWG SILICON TYPICAL
135°
FA
FB
EA
EB
DB
DC
CB
CC
BA
BC
AA
AC
ROOM F (TYPICAL ALL BEDROOMS) 1000 W
ROOM E 1000 W
ROOM D 1000 W
ROOM C 1000 W
ROOM B 1000 W
ROOM A 1000 W
BEDROOM FLOOR HEAT 6.0KW
FLOOR HEAT ROOMETTES
26.4A
FH3
3FHA
3FHB
3FHC
3FHA1
3FHB1
3FHC1
14.4A
*8 AWG
3.0A
TOILET ONLY
5.0A
(ALL BUT TOILET)
210°F
GTA
GTB
9B
9C
7A
7C
5A
5B
3B
3C
1A
1C
GENERAL TOILET 500 W
ROOM 9 1000 W
ROOM 7 1000 W
ROOM 5 1000 W
ROOM 3 1000 W
ROOM 1 1000 W
ROOMETTE FLOOR HEAT 10.5 KW
12.0 A
10B
10C
8A
8C
6A
6B
4B
4C
2A
2C
ROOM 10 1000 W
ROOM 8 1000 W
ROOM 6 1000 W
ROOM 4 1000 W
ROOM 2 1000 W
FLOOR HEAT 23.3 KW
TOTAL HEAT 43.3 KW
NOTES
EACH ELEMENT IS ACTUALLY 3 ELEMENTS IN SERIES:
(HALL ONLY)
REFERENCE DRAWINGS EQUIPMENT ENGINEERING
Amtrak
HEATING & A/C WIRING
10-6 SLEEPER
E-01-862
DELETE DESCRIPTION
CONFIGURATION TOILET WAS 3A
ADDED COMP. TERM. BOX WIRING
E-01-862

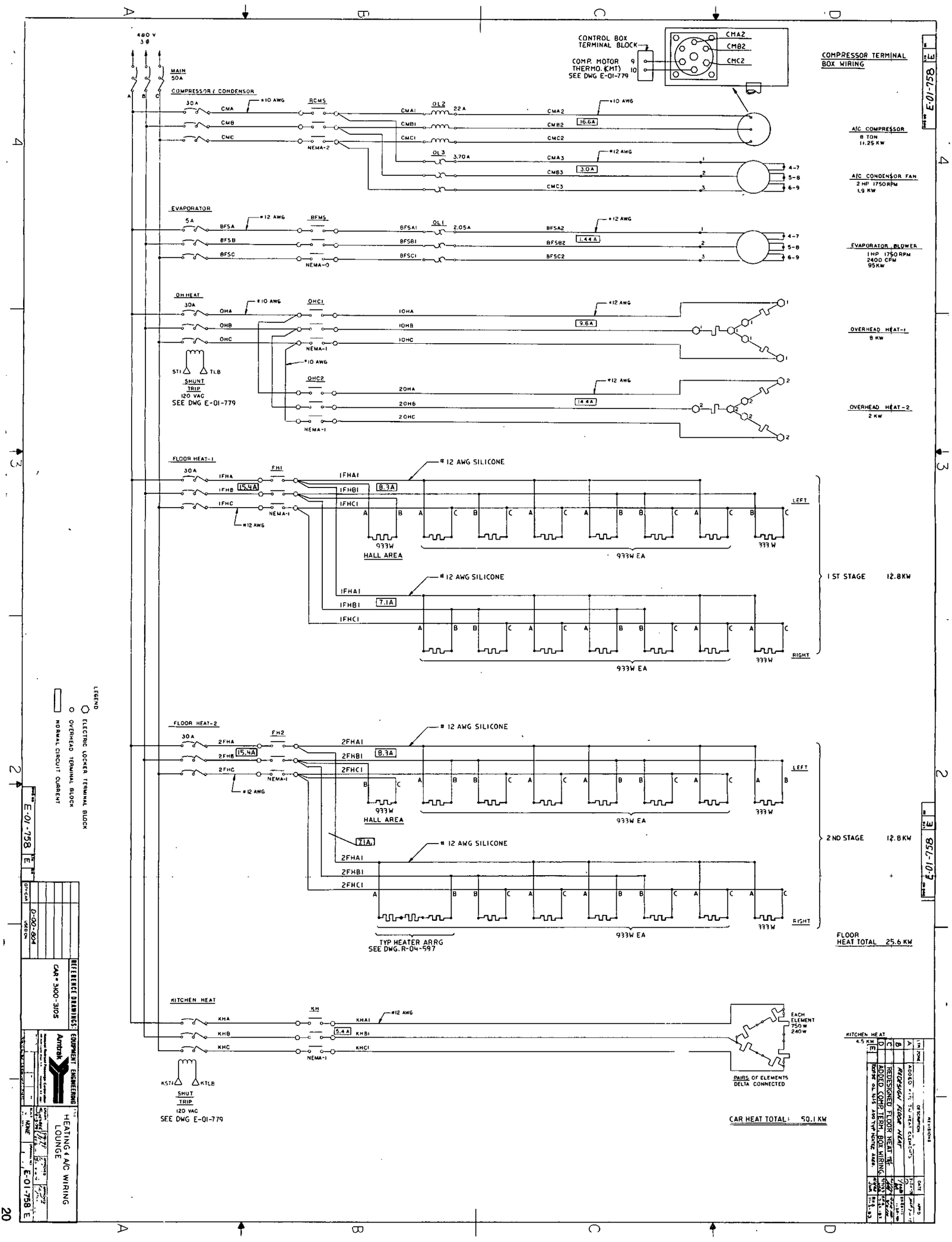

480 V 3 Ø
MAIN 50A
COMPRESSOR / CONDENSOR
CONTROL BOX TERMINAL BLOCK
COMP. MOTOR THERMO. (CMT) SEE DWG E-01-779
CMA2
CMB2
CMC2
COMPRESSOR TERMINAL BOX WIRING
A/C COMPRESSOR 8 TON 11.25 KW
A/C CONDENSOR FAN 2 HP 1750 RPM 1.9 KW
EVAPORATOR
EVAPORATOR BLOWER 1 HP 1750 RPM 2400 CFM 95 KW
OH HEAT
OVERHEAD HEAT-1 8 KW
OVERHEAD HEAT-2 2 KW
SHUNT TRIP 120 VAC SEE DWG E-01-779
FLOOR HEAT-1
FLOOR HEAT-2
12 AWG SILICONE
HALL AREA
933W
933W EA
333W
LEFT
RIGHT
1 ST STAGE 12.8 KW
2 ND STAGE 12.8 KW
TYP HEATER ARRG SEE DWG. R-04-597
FLOOR HEAT TOTAL 25.6 KW
KITCHEN HEAT
EACH ELEMENT 750 W 240 W
PAIRS OF ELEMENTS DELTA CONNECTED
KITCHEN HEAT 4.5 KW
CAR HEAT TOTAL: 50.1 KW
LEGEND
ELECTRIC LOCKER TERMINAL BLOCK
OVERHEAD TERMINAL BLOCK
NORMAL CIRCUIT CURRENT
REFERENCE DRAWINGS: CAR # 3100-3105
EQUIPMENT ENGINEERING
Amtrak
HEATING & A/C WIRING LOUNGE
E-01-758 E

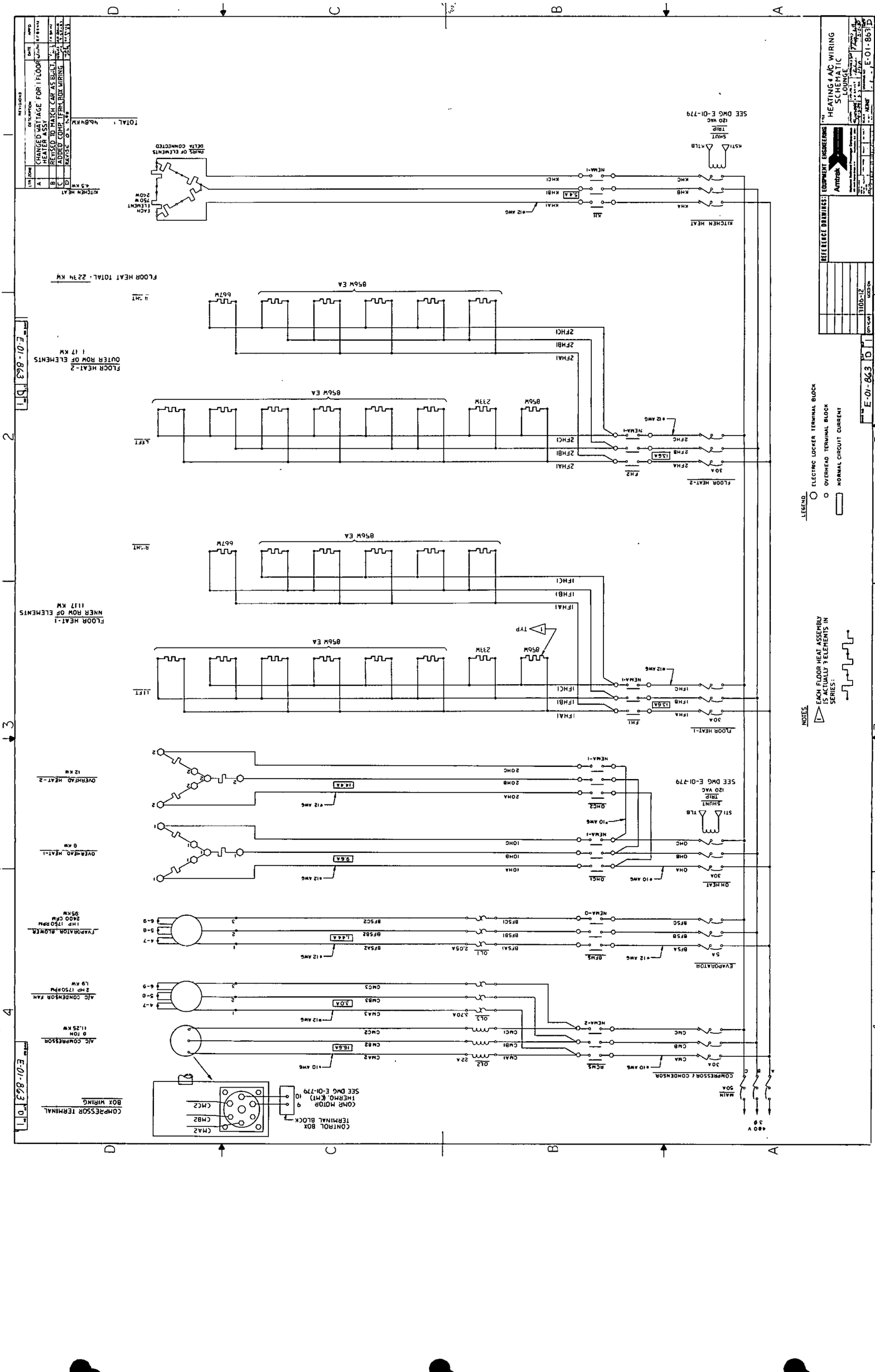
HEATING & A/C WIRING SCHEMATIC
LOUNGE
E-01-863
E-01-863
E-01-863
REFERENCE DRAWINGS:
EQUIPMENT ENGINEERING
Amtrak
LEGEND
ELECTRIC LOCKER TERMINAL BLOCK
OVERHEAD TERMINAL BLOCK
NORMAL CIRCUIT CURRENT
NOTES
EACH FLOOR HEAT ASSEMBLY IS ACTUALLY 7 ELEMENTS IN SERIES.
KITCHEN HEAT
4.5 KW
TOTAL : 46.8 KW
FLOOR HEAT TOTAL: 22.34 KW
FLOOR HEAT-2
OUTER ROW OF ELEMENTS
1.17 KW
FLOOR HEAT-1
INNER ROW OF ELEMENTS
1.17 KW
OVERHEAD HEAT-2
12 KW
OVERHEAD HEAT-1
9 KW
EVAPORATOR BLOWER
1 HP 1750 RPM
2400 CFM
95 KW
A/C CONDENSER FAN
2 HP 1750 RPM
1.9 KW
A/C COMPRESSOR
9 TON
11.25 KW
COMPRESSOR TERMINAL BOX WIRING
CONTROL BOX TERMINAL BLOCK
SEE DWG E-01-779
SEE DWG E-01-779
856W EA
667W
239W
856W
TYP
MAIN
50A
480 V
3 Ø
COMPRESSOR / CONDENSER
EVAPORATOR
DM HEAT
FLOOR HEAT-1
FLOOR HEAT-2
KITCHEN HEAT
NEMA-1
NEMA-2
NEMA-Q
#12 AWG
#10 AWG
#8 AWG
#6 AWG
#4 AWG
#2 AWG
SHUNT TRIP
120 VAC
TLB
M1
M2
M3
M4
M5
M6
M7
M8
M9
M10
M11
M12
M13
M14
M15
M16
M17
M18
M19
M20
M21
M22
M23
M24
M25
M26
M27
M28
M29
M30
M31
M32
M33
M34
M35
M36
M37
M38
M39
M40

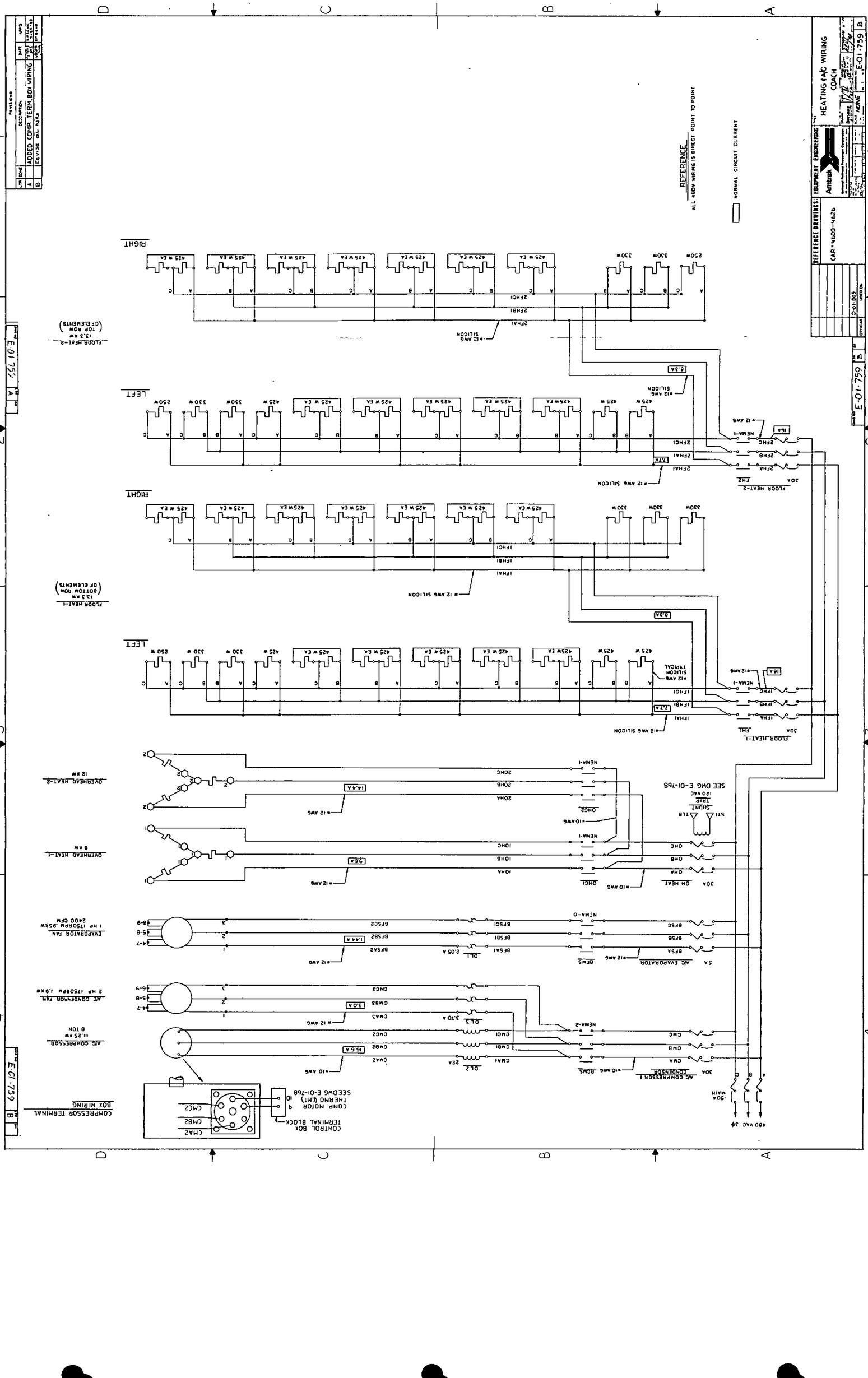
REVISIONS
LTR
DESCRIPTION
DATE
APVD
A
ADDED COMP. TERM. BOX WIRING
7/95
B
REVISED DWG. NO.
10/96
REFERENCE
ALL 480V WIRING IS DIRECT POINT TO POINT
NORMAL CIRCUIT CURRENT
EQUIPMENT ENGINEERING
Amtrak
HEATING & AC WIRING
COACH
E-01-759
B
REFERENCE DRAWINGS:
CAR # 4600-4626
E-01-757
E-01-759
RIGHT
LEFT
FLOOR HEAT-2
13.3 KW
(TOP ROW OF ELEMENTS)
FLOOR HEAT-1
13.3 KW
(BOTTOM ROW OF ELEMENTS)
OVERHEAD HEAT-2
12 KW
OVERHEAD HEAT-1
8 KW
EVAPORATOR FAN
1 HP 1750RPM .95KW
2400 CFM
A/C COMPRESSOR FAN
2 HP 1750RPM 1.9 KW
A/C COMPRESSOR
11.25 KW
8 TON
COMPRESSOR TERMINAL
BOX WIRING
CONTROL BOX
TERMINAL BLOCK
COMP MOTOR
THERMO (CMT)
SEE DWG E-01-768
SEE DWG E-01-768
480 VAC 3Φ
150A
MAIN
A/C COMPRESSOR 1
CONDENSOR
30A
A/C EVAPORATOR
5A
OH HEAT
30A
FLOOR HEAT-1
CHT
30A
FLOOR HEAT-2
FHT
30A
NEMA-1
NEMA-2
NEMA-0
NEMA-4
NEMA-5
NEMA-6
NEMA-7
NEMA-8
NEMA-9
NEMA-10
NEMA-11
NEMA-12
NEMA-13
NEMA-14
NEMA-15
NEMA-16
NEMA-17
NEMA-18
NEMA-19
NEMA-20
NEMA-21
NEMA-22
NEMA-23
NEMA-24
NEMA-25
NEMA-26
NEMA-27
NEMA-28
NEMA-29
NEMA-30
NEMA-31
NEMA-32
NEMA-33
NEMA-34
NEMA-35
NEMA-36
NEMA-37
NEMA-38
NEMA-39
NEMA-40
NEMA-41
NEMA-42
NEMA-43

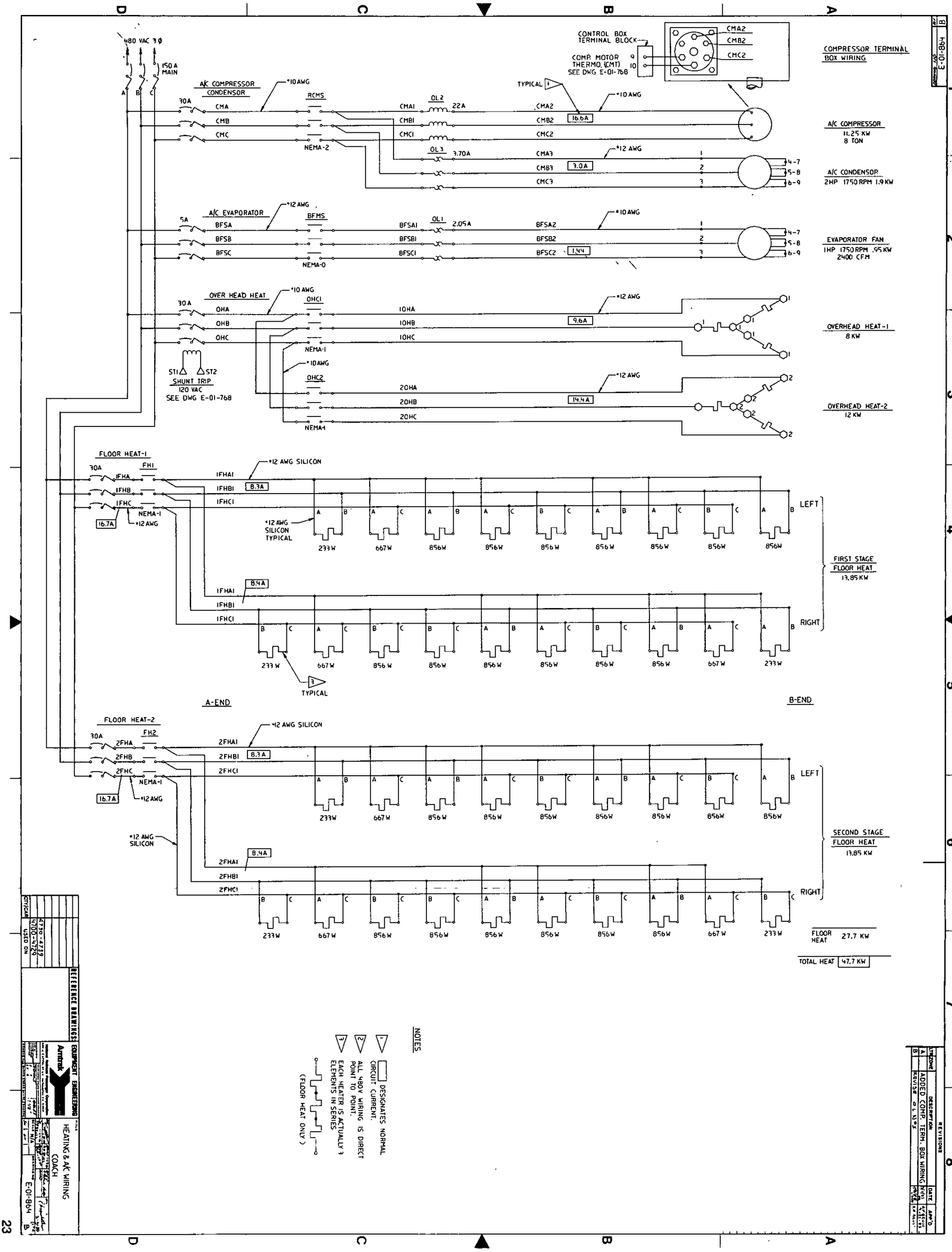

480 VAC 3Ø
150 A MAIN
A/C COMPRESSOR CONDENSOR
*10 AWG
RCMS
NEMA-2
CMA
CMB
CMC
CMA1
CMB1
CMC1
OL2
22A
OL3
3.70A
CMA2
CMB2
CMC2
CMA3
CMB3
CMC3
16.6A
3.0A
*12 AWG
TYPICAL
CONTROL BOX TERMINAL BLOCK
COMP. MOTOR THERMO. (CMT) SEE DWG E-01-768
COMPRESSOR TERMINAL BOX WIRING
A/C COMPRESSOR 11.25 KW 8 TON
A/C CONDENSOR 2HP 1750 RPM 1.9 KW
A/C EVAPORATOR
BFMS
NEMA-0
BFSA
BFSB
BFSC
BFSA1
BFSB1
BFSC1
OL1
2.05A
BFSA2
BFSB2
BFSC2
1.44
EVAPORATOR FAN 1HP 1750 RPM .95 KW 2400 CFM
OVER HEAD HEAT
OHA
OHB
OHC
OHC1
OHC2
NEMA-1
10HA
10HB
10HC
9.6A
OVERHEAD HEAT-1 8 KW
20HA
20HB
20HC
14.4A
OVERHEAD HEAT-2 12 KW
ST1
ST2
SHUNT TRIP 120 VAC SEE DWG E-01-768
FLOOR HEAT-1
FH1
1FHA
1FHB
1FHC
16.7A
*12 AWG SILICON
1FHA1
1FHB1
1FHC1
8.3A
8.4A
*12 AWG SILICON TYPICAL
233W
667W
856W
LEFT
RIGHT
FIRST STAGE FLOOR HEAT 13.85 KW
TYPICAL
A-END
B-END
FLOOR HEAT-2
FH2
2FHA
2FHB
2FHC
2FHA1
2FHB1
2FHC1
SECOND STAGE FLOOR HEAT 13.85 KW
FLOOR HEAT 27.7 KW
TOTAL HEAT 47.7 KW
NOTES
DESIGNATES NORMAL CIRCUIT CURRENT.
ALL 480V WIRING IS DIRECT POINT TO POINT.
EACH HEATER IS ACTUALLY 3 ELEMENTS IN SERIES
(FLOOR HEAT ONLY)
REVISIONS
ADDED COMP. TERM. BOX WIRING
REFERENCE DRAWINGS
EQUIPMENT ENGINEERING
Amtrak
HEATING & A/C WIRING COACH
E-01-864

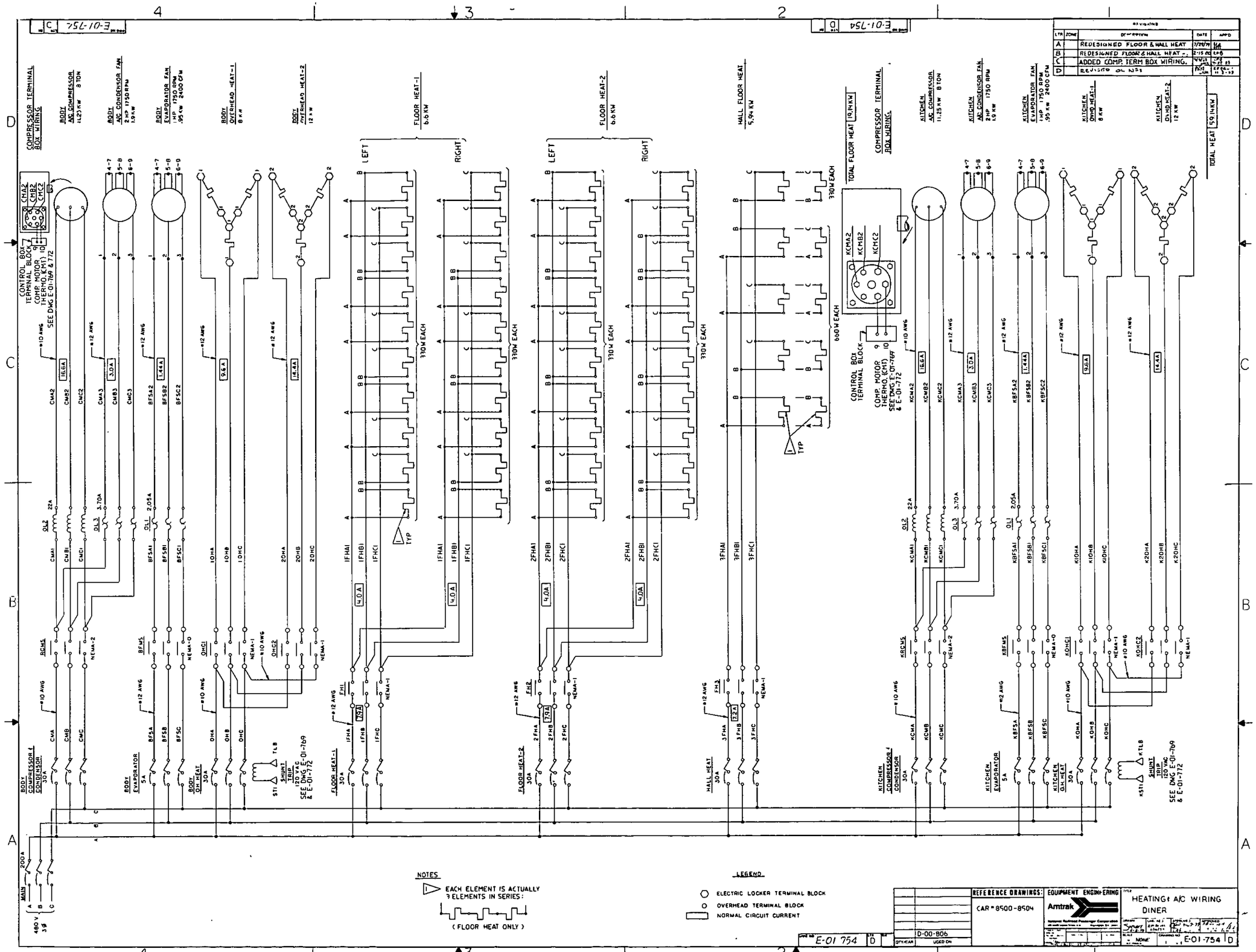

E-01-754
REVISIONS
A REDESIGNED FLOOR & HALL HEAT
B REDESIGNED FLOOR & HALL HEAT
C ADDED COMP. TERM BOX WIRING.
D REVISED OL NOS
COMPRESSOR TERMINAL BOX WIRING
BODY A/C COMPRESSOR 11.25 KW 8 TON
BODY A/C CONDENSOR FAN 2 HP 1750 RPM 1.9 KW
BODY EVAPORATOR FAN 1 HP 1750 RPM .95 KW 2400 CFM
BODY OVERHEAD HEAT-1 8 KW
BODY OVERHEAD HEAT-2 12 KW
FLOOR HEAT-1 6.6 KW
FLOOR HEAT-2 6.6 KW
HALL FLOOR HEAT 5.94 KW
TOTAL FLOOR HEAT 19.14 KW
KITCHEN A/C COMPRESSOR 11.25 KW 8 TON
KITCHEN A/C CONDENSOR FAN 2 HP 1750 RPM 1.9 KW
KITCHEN EVAPORATOR FAN 1 HP 1750 RPM .95 KW 2400 CFM
KITCHEN OVHD HEAT-1 8 KW
KITCHEN OVHD HEAT-2 12 KW
TOTAL HEAT 59.14 KW
CONTROL BOX TERMINAL BLOCK
COMP. MOTOR THERMO. (CMT)
SEE DWG E-01-769 & 772
330W EACH
660W EACH
LEFT
RIGHT
TYP
BODY COMPRESSOR & CONDENSOR 30A
BODY EVAPORATOR 5A
BODY OH HEAT 30A
FLOOR HEAT-1 30A
FLOOR HEAT-2 30A
HALL HEAT 30A
KITCHEN COMPRESSOR & CONDENSOR 30A
KITCHEN EVAPORATOR 5A
KITCHEN OH HEAT 30A
SHUNT TRIP 120 VAC
SEE DWG E-01-769 & E-01-772
MAIN 200A
480 V 3Ø
NOTES
EACH ELEMENT IS ACTUALLY 3 ELEMENTS IN SERIES:
(FLOOR HEAT ONLY)
LEGEND
ELECTRIC LOCKER TERMINAL BLOCK
OVERHEAD TERMINAL BLOCK
NORMAL CIRCUIT CURRENT
REFERENCE DRAWINGS:
CAR # 8500-8504
EQUIPMENT ENGINEERING
Amtrak
HEATING & A/C WIRING DINER
D-00-806
E-01 754
D

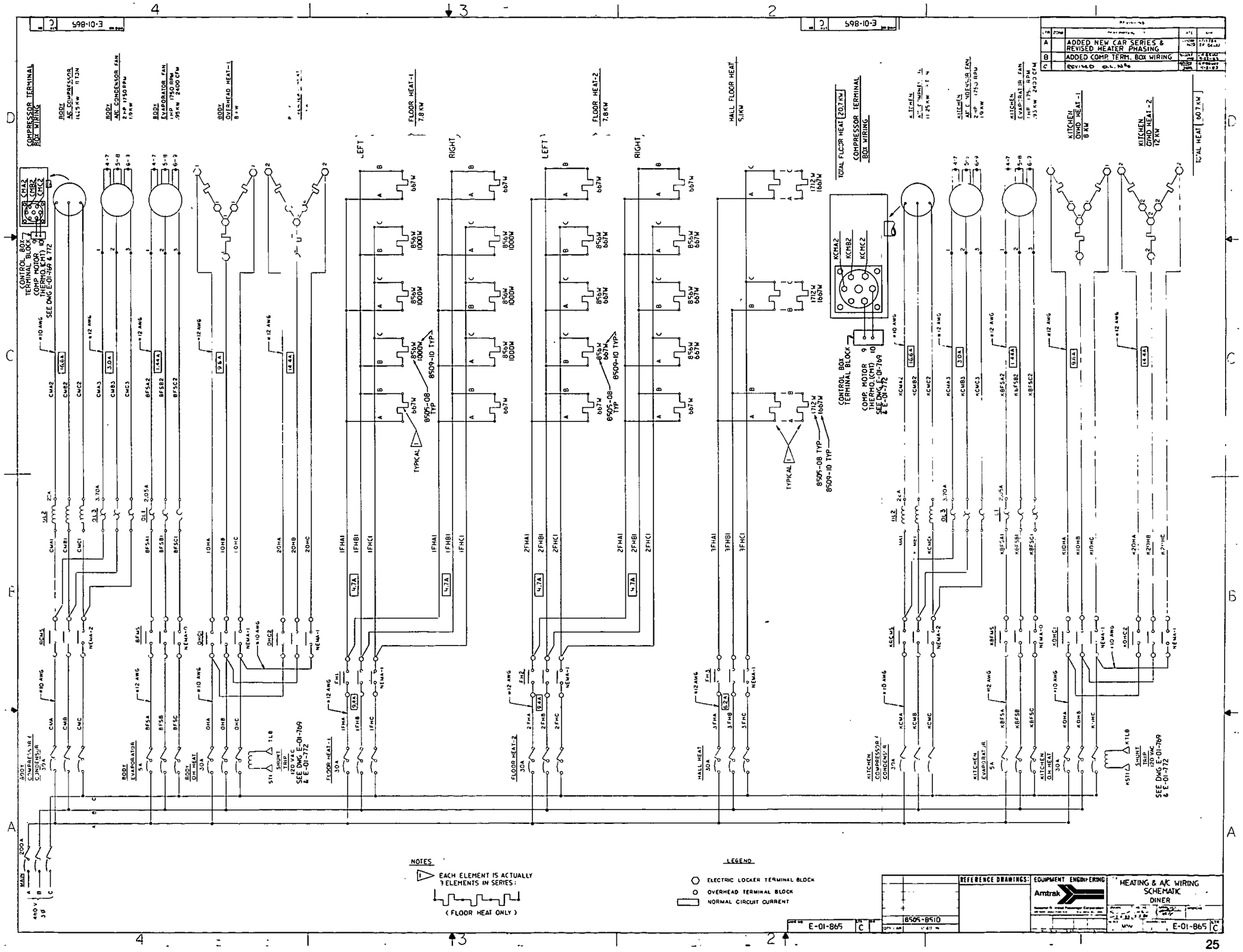

REVISIONS
A ADDED NEW CAR SERIES & REVISED HEATER PHASING
B ADDED COMP. TERM. BOX WIRING
C REVISED O.L. NOS
COMPRESSOR TERMINAL BOX WIRING
BODY A/C COMPRESSOR
BODY A/C CONDENSOR FAN
BODY EVAPORATOR FAN
BODY OVERHEAD HEAT-1
FLOOR HEAT-1 7.8 KW
FLOOR HEAT-2 7.8 KW
HALL FLOOR HEAT 5.1 KW
TOTAL FLOOR HEAT 20.7 KW
COMPRESSOR TERMINAL BOX WIRING
KITCHEN OVHD HEAT-1 8 KW
KITCHEN OVHD HEAT-2 12 KW
TOTAL HEAT 60.7 KW
CONTROL BOX TERMINAL BLOCK
COMP. MOTOR THERMO. (CMT)
SEE DWG E-01-769 & E-01-772
8505-08 TYP
8509-10 TYP
TYPICAL
LEFT
RIGHT
MAIN
NOTES
EACH ELEMENT IS ACTUALLY 3 ELEMENTS IN SERIES:
(FLOOR HEAT ONLY)
LEGEND
ELECTRIC LOCKER TERMINAL BLOCK
OVERHEAD TERMINAL BLOCK
NORMAL CIRCUIT CURRENT
REFERENCE DRAWINGS:
EQUIPMENT ENGINEERING
Amtrak
HEATING & A/C WIRING SCHEMATIC
DINER
8505-8510
E-01-865

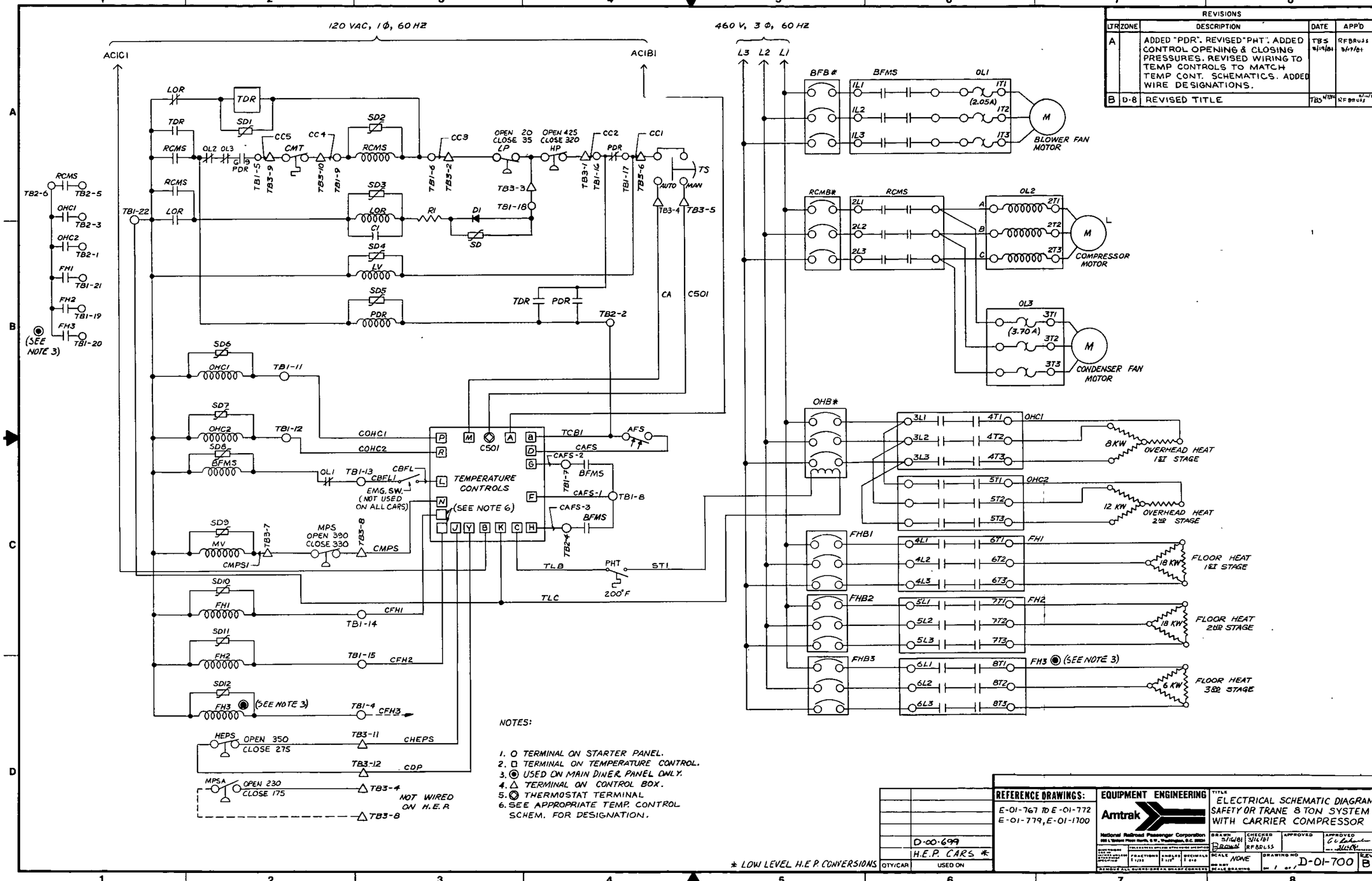

REVISIONS

LTR	ZONE	DESCRIPTION	DATE	APP'D
A		ADDED "PDR". REVISED "PHT". ADDED CONTROL OPENING & CLOSING PRESSURES. REVISED WIRING TO TEMP CONTROLS TO MATCH TEMP CONT. SCHEMATICS. ADDED WIRE DESIGNATIONS.	TBS 3/19/81	RFBRUSS 3/19/81
B	D-8	REVISED TITLE	TBS	RFBRUSS

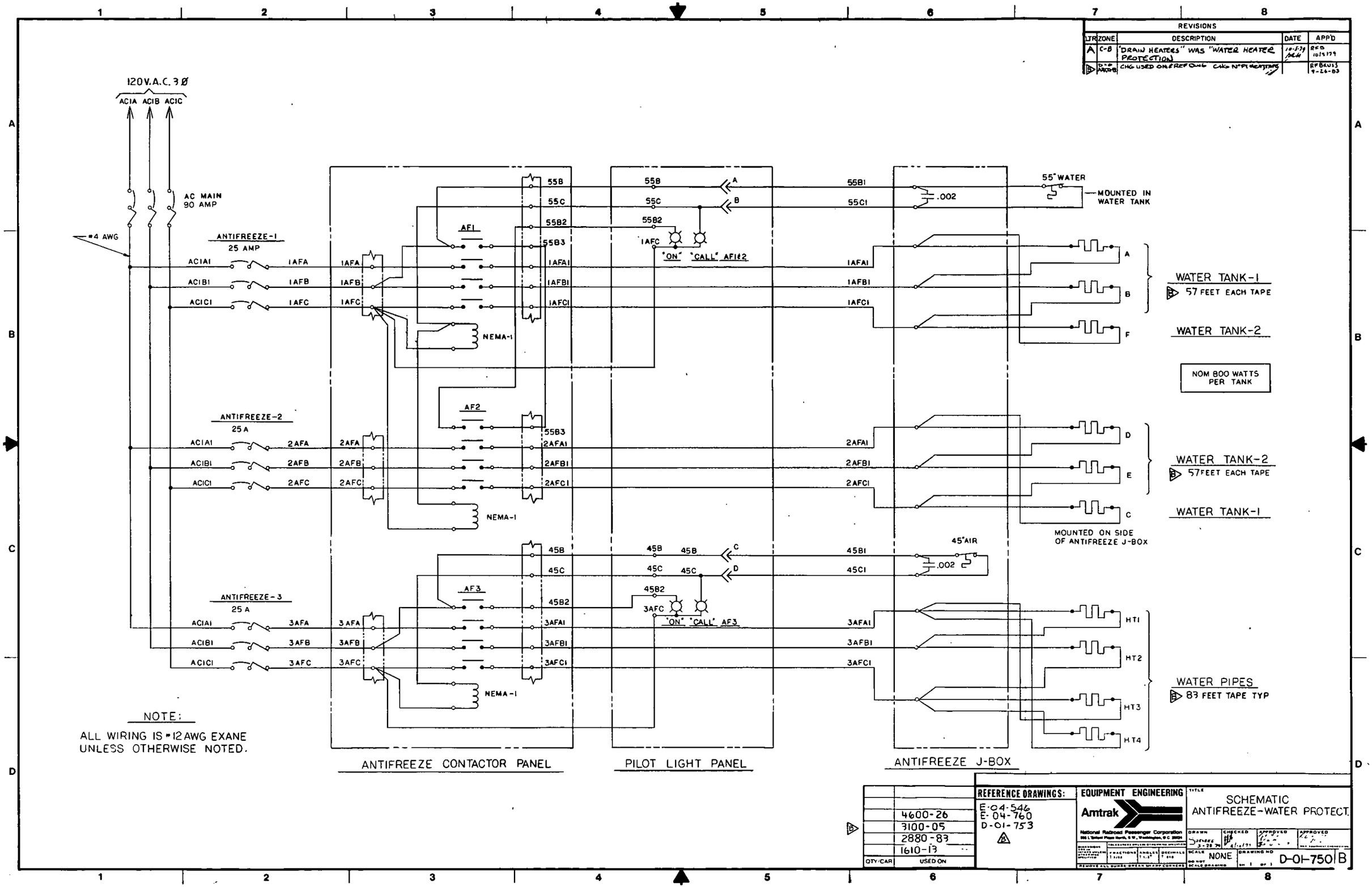

REVISIONS
LTR ZONE DESCRIPTION DATE APP'D
A C-8 "DRAIN HEATERS" WAS "WATER HEATER PROTECTION"
CHG USED ON & REF DWG
120V.A.C. 3Ø
AC1A AC1B AC1C
AC MAIN 90 AMP
#4 AWG
ANTIFREEZE-1
25 AMP
ANTIFREEZE-2
25 A
ANTIFREEZE-3
25 A
AF1
AF2
AF3
NEMA-1
55B
55C
55B2
55B3
1AFA1
1AFB1
1AFC1
2AFA1
2AFB1
2AFC1
45B
45C
45B2
3AFA1
3AFB1
3AFC1
1AFC
"ON" "CALL" AF1&2
3AFC
"ON" "CALL" AF3
55B1
55C1
.002
55" WATER
MOUNTED IN WATER TANK
45" AIR
WATER TANK-1
57 FEET EACH TAPE
WATER TANK-2
NOM 800 WATTS PER TANK
WATER TANK-2
57 FEET EACH TAPE
WATER TANK-1
MOUNTED ON SIDE OF ANTIFREEZE J-BOX
WATER PIPES
83 FEET TAPE TYP
HT1
HT2
HT3
HT4
NOTE:
ALL WIRING IS #12 AWG EXANE UNLESS OTHERWISE NOTED.
ANTIFREEZE CONTACTOR PANEL
PILOT LIGHT PANEL
ANTIFREEZE J-BOX
4600-26
3100-05
2880-83
1610-13
QTY/CAR USED ON
REFERENCE DRAWINGS:
E-04-546
E-04-760
D-01-753
EQUIPMENT ENGINEERING
Amtrak
National Railroad Passenger Corporation
SCHEMATIC
ANTIFREEZE-WATER PROTECT.
SCALE NONE
D-01-750 B

E-04-546 A

REVISIONS				
LTR	ZONE	DESCRIPTION	DATE	APPD
A		ADDED NEW CAR SERIES TO USED ON BLOCK	4/29/83	EP 04-17 4/29/83

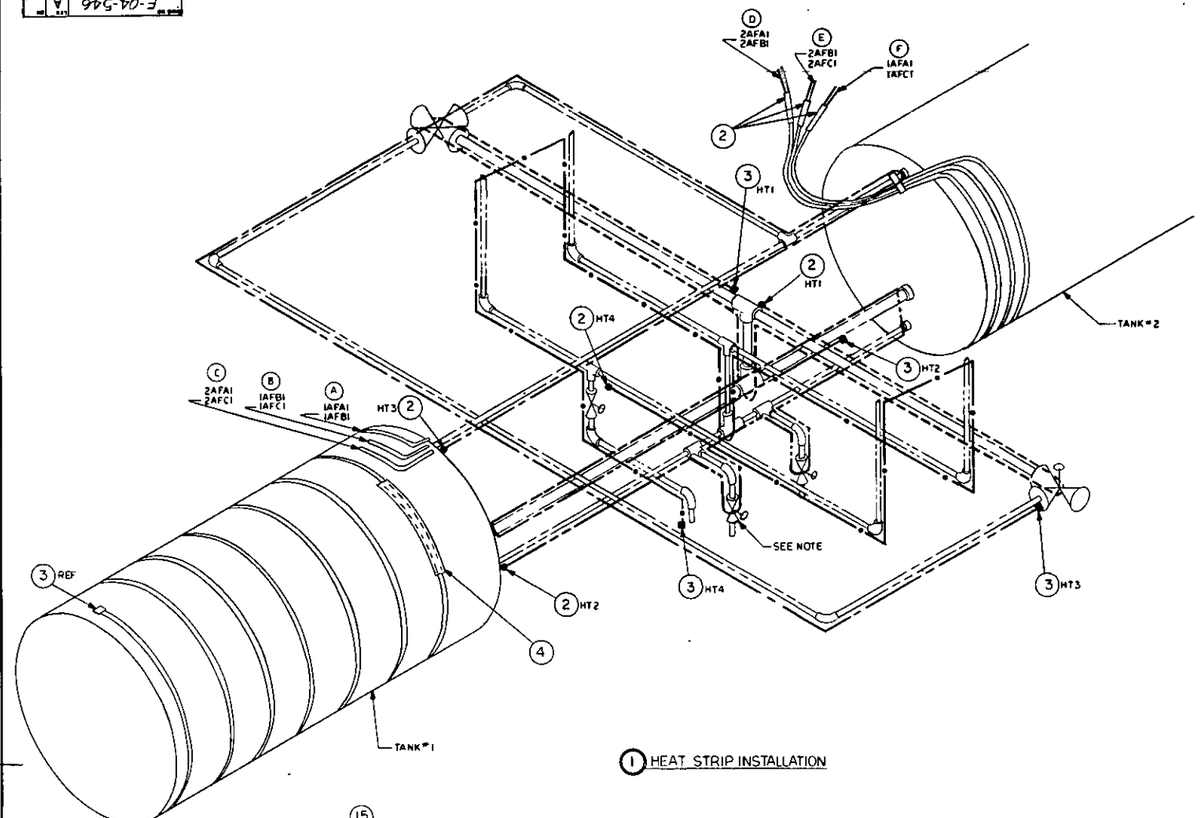

1 HEAT STRIP INSTALLATION

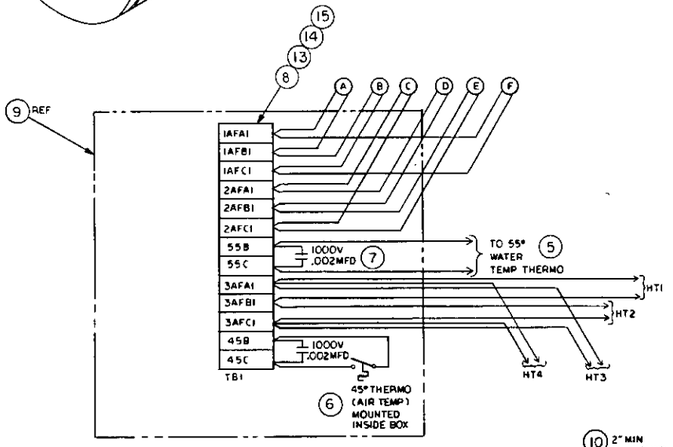

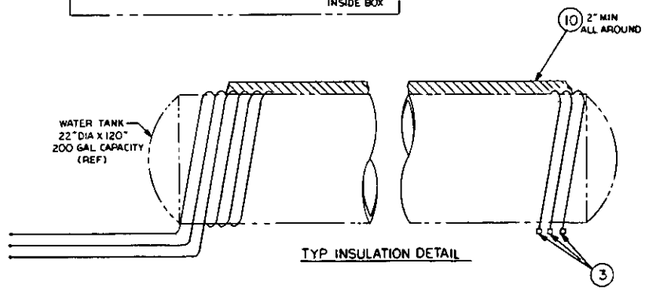

TYP INSULATION DETAIL

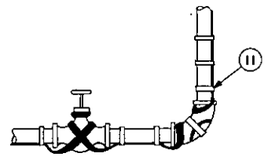

TYP VALVE & FITTING DETAIL
SEE NOTE

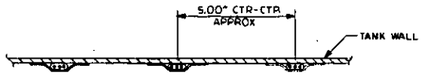

TYP CROSS SECTION
TANK

HEAT TRACING INSTALLATION INSTRUCTIONS

1. WATER STORAGE TANKS:
   - A. PREPARE THREE 57 FT. LENGTHS OF THERMO-LIMIT FOR EACH TANK BY CONNECTING POWER FEED WIRES TO HEATER STRIPS WITH RCT-1 KITS. FEED WIRES MUST BE LONG ENOUGH TO REACH FROM THE POWER SUPPLY PANEL TO 2 FT. PAST THE CONDUIT EXIT POINT. APPLY END SEALS FROM KITS.
   - B. ENSURE THE TANK IS CLEAN AND DRY. SECURE EACH OF THE THREE STRIPS TO THE UPPER AIR LINE ADJACENT TO THE TANK, AT A POINT ON THE HEATER STRIP 5 FT. FROM THE FEED WIRE CONNECTION.
   - C. SPIRAL WRAP EACH HEATER AROUND THE TANK WITH APPROXIMATELY 16 INCHES BETWEEN ADJACENT WRAPS, SO THAT WHEN ALL THREE HEATERS ARE IN PLACE THE SPACING BETWEEN ADJACENT STRIPS IS ABOUT 5 INCHES. SECURE THE HEATER TO THE TANK WITH AT-150 ALUMINUM TAPE, EXCEPT WHERE THE TANK IS COVERED BY FIBERGLASS INSULATION AT THE TOP.
2. AIR AND WATER LINES:
   - A. PREPARE FOUR LENGTHS OF THERMO-LIMIT FOR CIRCUITS HT-1 THROUGH HT-4, AS EXPLAINED ABOVE.
   - B. TANK AND HEAT TRACE TAPE TO BE INSULATED AFTER TEST OF HEAT TAPES, USING ITEM 10, MIN. OF 2" THICK
   - C. INSTALL EACH HEATER AS SHOWN ON THE LAYOUT (NOT TO SCALE), SECURING THE STRIP TO THE PIPE AT 1 FT. INTERVALS WITH TIE-WRAPS, LOOP THE HEATER AROUND ELBOWS AND VALVES AS SHOWN IN DETAIL A, TO ALLOW FOR EASY REMOVAL OF THESE PARTS IN THE FUTURE
3. WATER + ILL VALVES AND LINES:
   - A. FILL VALVE BODIES SHALL BE MOUNTED ON "STANDOFFS" TO MINIMIZE HEAT LOSSES AS MUCH AS POSSIBLE
   - B. ALL VALVES SHALL BE REMOVABLE WITHOUT REMOVING OR DISCONNECTING HEAT TAPES
   - C. APPLY HEAT TAPE TO OGONTZ AUTOMATIC DRAIN VALVES AT LEAST TWO (2) TURNS. (TO AID IN FILLING WITH COLD WATER, ETC.)
   - D. VALVE BODIES SHALL HAVE TWO (2) LOOPS APPLIED. HEAT TAPE SHALL NOT INTERFERE WITH VALVE REMOVAL. MAKE AT LEAST 3" FREE HANGING LOOP AT EACH ELBOW. REFER TO CHEMLEX RAYCHEM INSTRUCTIONS MANUAL.
   - E. MAKE AT LEAST FOUR (4) WRAPS OF HEAT TAPE AROUND THE FILL VALVE BODIES. INSULATE ALL PIPING & VALVES AFTER TESTING. MINIMUM OF 1" FOR PIPING AND 2" FOR VALVES.
   - F. HEAT TAPES SHALL BE CONTINUOUS AND NOT SPLICED.
   - G. INSULATE ALL PIPING AND VALVES AFTER TESTING. MINIMUM OF 3/4" FIBERGLASS INSULATION, ITEM 10.
4. POWER FEED WIRE ROUTING.
   - A. COLLECT ALL FEED WIRES TOGETHER AT THE HEATER JUNCTION, AND SECURELY BAND TO A FRAME STUD WITH A HEAVY-DUTY TIE-WRAP. PULL THE FEED WIRES THROUGH THE CONDUIT TO THE POWER DISTRIBUTION PANEL, LEAVING ENOUGH SLACK OUTSIDE THE CONDUIT TO FORM A DRIP LOOP.

QTY/CAR	USED ON
7600-18	
7000-07	
8700-01	
8526-23	
8500-04	
4649-50	
4000-26	
3113-17	

QTY/CAR	USED ON
2900-41	
2650-94	
2474-78	
2430-56	
2050-56	
1622-25	

REF	AMTRAK P/N	DESCRIPTION	MFG/MAT'L	PART NO.	ITEM
	D01-750	ANTIFREEZE WATER PROTECT SCHEMATIC			16
1		MARKER STRIP	ALLEN-BRADLEY	1492-N2	15
1		TRACK, MOUNTING	ALLEN-BRADLEY	1492-N11	14
1		END SECTION	ALLEN-BRADLEY	1492-N16	13
470'		HEAT TRACING STRIP (TLT120BT)	RAYCHEM	75010	12
AR	25-89005523	TIE WRAP			11
AR		INSULATION, FIBERGLASS			10
REF	D-00-747-1	JUNCTION BOX			9
14		TERMINAL SECTION	ALLEN-BRADLEY	1492-CD3130	8
2		CAPACITOR, CERAMIC DISC	SPRAGUE	5GAD20	7
1		THERMOSTAT, OUTSIDE TEMP	FENWAL	80016-4	6
1		THERMOSTAT, WATER TANK	FENWAL	80016-4	5
270'		TAPE, ALUM (AT150)	RAYCHEM	77731	4
10		END SEAL (RCT-1 KIT)	RAYCHEM	75002	3
10		POWER FEEDWIRE CONNECTION	RAYCHEM	75002	2
X	-1	HEAT STRIP INSTALLATION			1

LIST OF MATERIAL

REFERENCE DRAWINGS:
D-00-802
D-00-803
D-00-806

EQUIPMENT ENGINEERING
Amtrak

TITLE: ANTI-FREEZE WATER PROTECTION INSTALLATION

E-04-546 A

E-04-760 A

E-04-760 A

REVISIONS				
LTR	ZONE	DESCRIPTION	DATE	APPD
A		ADDED NEW CAR SERIES TO USED ON BLOCK.	5/7/85 MRD	R.P.BRAND 9/5/85

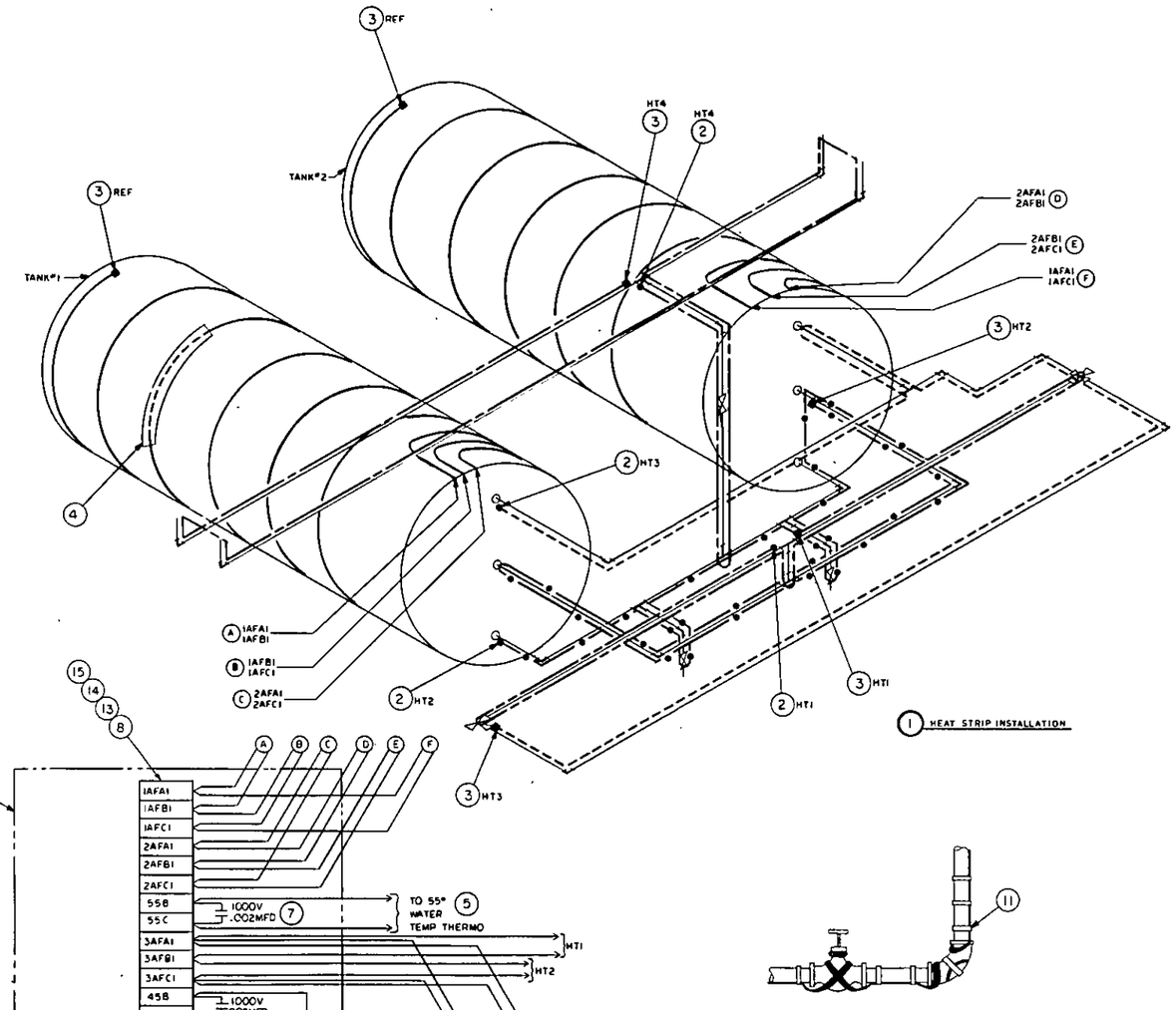

1 HEAT STRIP INSTALLATION

TYP VALVE & FITTING DETAIL
SEE NOTE

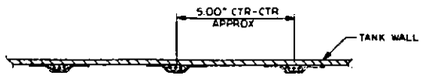

TYP CROSS SECTION
TANK

TYP INSULATION DETAIL

HEAT TRACERS INSTALLATION INSTRUCTIONS

1. WATER STORAGE TANKS:
   - A. PREPACE THREE 57 FT. LENGTHS OF THERMO-LIMIT FOR EACH TANK BY CONNECTING POWER FEED WIRES TO HEATER STRIPS WITH RET-1 KITS. FEED WIRES MUST BE LONG ENOUGH TO REACH FROM THE POWER SUPPLY PANEL TO 2 FT. PAST THE CONDUIT EXIT POINT. APPLY END SEALS FROM KITS.
   - B. ENSURE THE TANK IS CLEAN AND DRY. SECURE EACH OF THE THREE STRIPS TO THE UPPER AIR LINE ADJACENT TO THE TANK, AT A POINT ON THE HEATER STRIP 3 FT. FROM THE FEED WIRE CONNECTION.
   - C. SPIRAL WRAP EACH HEATER AROUND THE TANK WITH APPROXIMATELY 16 INCHES BETWEEN ADJACENT WRAPS, SO THAT WHEN ALL THREE HEATERS ARE IN PLACE THE SPACING BETWEEN ADJACENT STRIPS IS ABOUT 5 INCHES. SECURE THE HEATER TO THE TANK WITH AT-150 ALUMINUM TAPE, EXCEPT WHERE THE TANK IS COVERED BY FIBERGLASS INSULATION AT THE TOP.
2. AIR AND WATER LINES:
   - A. PREPACE FOUR LENGTHS OF THERMO-LIMIT FOR CIRCUITS HT-1 THROUGH HT-4, AS EXPLAINED ABOVE.
   - B. TANK AND HEAT TRACE TAPE TO BE INSULATED AFTER TEST OF HEAT TAPES, USING ITEM 10, MIN. OF 2" THICK
   - C. INSTALL EACH HEATER AS SHOWN ON THE LAYOUT (NOT TO SCALE), SECURING THE STRIP TO THE PIPE AT 1 FT. INTERVALS WITH TIE-WRAPS. LOOP THE HEATER AROUND ELBOWS AND VALVES AS SHOWN IN DETAIL A, TO ALLOW FOR EASY REMOVAL OF THESE PARTS IN THE FUTURE
3. WATER FILL VALVES AND LINES:
   - A. FILL VALVE BODIES SHALL BE MOUNTED ON "STANDOFFS" TO MINIMIZE HEAT LOSSES AS MUCH AS POSSIBLE
   - B. ALL VALVES SHALL BE REMOVABLE WITHOUT REMOVING OR DISCONNECTING HEAT TAPES
   - C. APPLY HEAT TAPE TO OGONIZ AUTOMATIC DRAIN VALVES AT LEAST TWO (2) TURNS. (TO AID IN FILLING WITH COLD WATER, ETC.)
   - D. VALVE BODIES SHALL HAVE TWO (2) LOOPS APPLIED. HEAT TAPE SHALL NOT INTERFERE WITH VALVE REMOVAL. MAKE AT LEAST 1" FREE HANGING LOOP AT EACH ELBOW. REFER TO CHEMLEX RAYCHEM INSTRUCTIONS MANUAL.
   - E. MAKE AT LEAST FOUR (4) WRAPS OF HEAT TAPE AROUND THE FILL VALVE BODIES. INSULATE ALL PIPING & VALVES AFTER TESTING. MINIMUM OF 1" FOR PIPING AND 2" FOR VALVES.
   - F. HEAT TAPES SHALL BE CONTINUOUS AND NOT SPLICED.
   - G. INSULATE ALL PIPING AND VALVES AFTER TESTING. MINIMUM OF 3/4" FIBERGLASS INSULATION, ITEM 10.
4. POWER FEED WIRE ROUTING:
   - A. COLLECT ALL FEED WIRES TOGETHER AT THE HEATER JUNCTION, AND SECURELY BAND TO A FRAME STUD WITH A HEAVY-DUTY TIE-WRAP. PULL THE FEED WIRES THROUGH THE CONDUIT TO THE POWER DISTRIBUTION PANEL, LEAVING ENOUGH SLACK OUTSIDE THE CONDUIT TO FORM A DRIP LOOP.

QTY	AMTRAK P/N	DESCRIPTION	MFG / MAT'L	PART NO.	ITEM
		LIST OF MATERIAL			
REF	D-01-750	ANTIFREEZE WATER PROTECT SCHEMATIC			16
1		MARKER STRIP	ALLEN-BRADLEY	1492-N2	15
1		TRACK, MOUNTING	ALLEN-BRADLEY	1492-N11	14
1		END SECTION	ALLEN-BRADLEY	1492-N16	13
270'		HEAT TRACING STRIP (TLT120BT)			12
AR	25-89005523	TIE WRAP			11
AR		INSULATION, FIBERGLASS			10
REF	D-00-747-1	JUNCTION BOX			9
14		TERMINAL SECTION	ALLEN-BRADLEY	1492-CD3130	8
2		CAPACITOR, CERAMIC DISC	SPRAGUE	5GA020	7
1		THERMOSTAT, OUTSIDE TEMP	FENWAL	80016-4	6
1		THERMOSTAT, WATER TANK	FENWAL	80016-4	5
270'		TAPE, ALUM (AT150)	RAYCHEM	77731	4
10		END SEAL (ACT-1 KIT)	RAYCHEM	75002	3
10		POWER FEEDWIRE CONNECTION	RAYCHEM	75002	2
X	-1	HEAT STRIP INSTALLATION			1

QTY/CAR	USED ON
	8600-05
	7620-79
	8830-82
	8850-83
	2360-97
	2871-79
	2457-73
	2060-97
	1626-57
	1610-21

QTY/CAR	USED ON
	8702-04
	8503-25
	5000-08
	4700-45
	4600-46
	3118-27
	3100-12

REFERENCE DRAWINGS:
D-01-801
D-01-804
D-01-805

EQUIPMENT ENGINEERING

Amtrak

TITLE: ANTI-FREEZE WATER-PROTECTION INSTALLATION

DRAWING NO. E-04-760 A

E-04-760 A

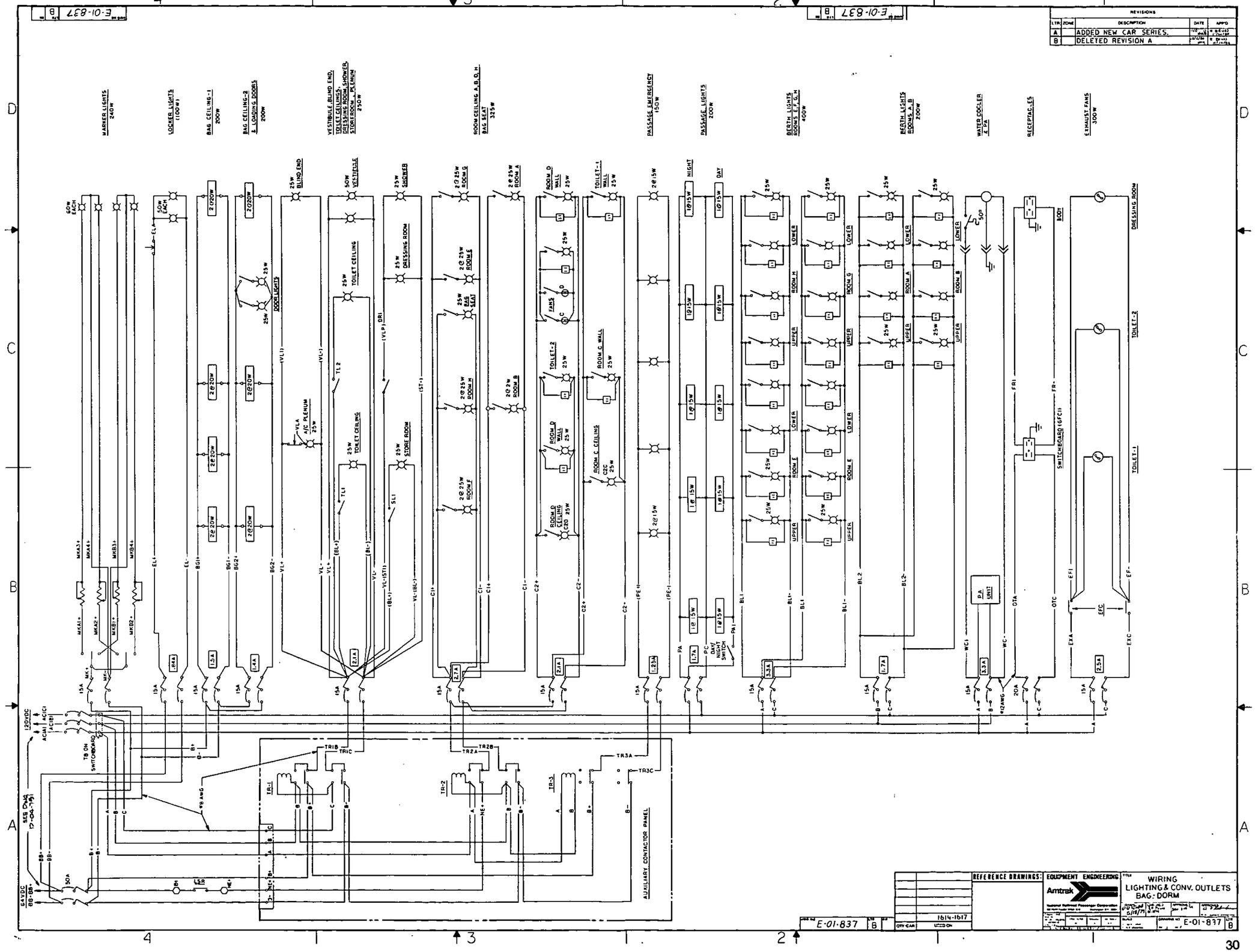
E-01-837 B
REVISIONS
LTR | ZONE | DESCRIPTION | DATE | APPD
A | | ADDED NEW CAR SERIES. | 7/26/78 | R. W. Hill
B | | DELETED REVISION A | 3/12/81 | R. W. Hill
MARKER LIGHTS 240W
LOCKER LIGHTS (100W)
BAG CEILING-1 200W
BAG CEILING-2 & LOADING DOORS 200W
VESTIBULE, BLIND END, TOILET CEILINGS, DRESSING ROOM, SHOWER, STOREROOM, PLENUM 250W
ROOM CEILING A, B, G, H BAG SEAT 325W
PASSAGE EMERGENCY 150W
PASSAGE LIGHTS 200W
BERTH LIGHTS ROOMS E, F, G, H 400W
BERTH LIGHTS ROOMS A, B 200W
WATER COOLER & FA
RECEPTACLES
EXHAUST FANS 300W
60W EACH
50W EACH
2@20W
DOOR LIGHTS
25W BLIND END
50W VESTIBULE
25W TOILET CEILING
25W DRESSING ROOM
25W SHOWER
25W STORE ROOM
2@25W ROOM G
2@25W BAG SEAT
2@25W ROOMS F
2@25W ROOM H
2@25W ROOM A
2@25W ROOM B
ROOM D WALL 25W
ROOM D CEILING C2D 25W
TOILET-2 25W
TOILET-1 WALL 25W
FANS
ROOM C WALL 25W
ROOM C CEILING C2C 25W
2@15W
1@15W NIGHT
1@15W DAY
1@15W
1@15W
1@15W

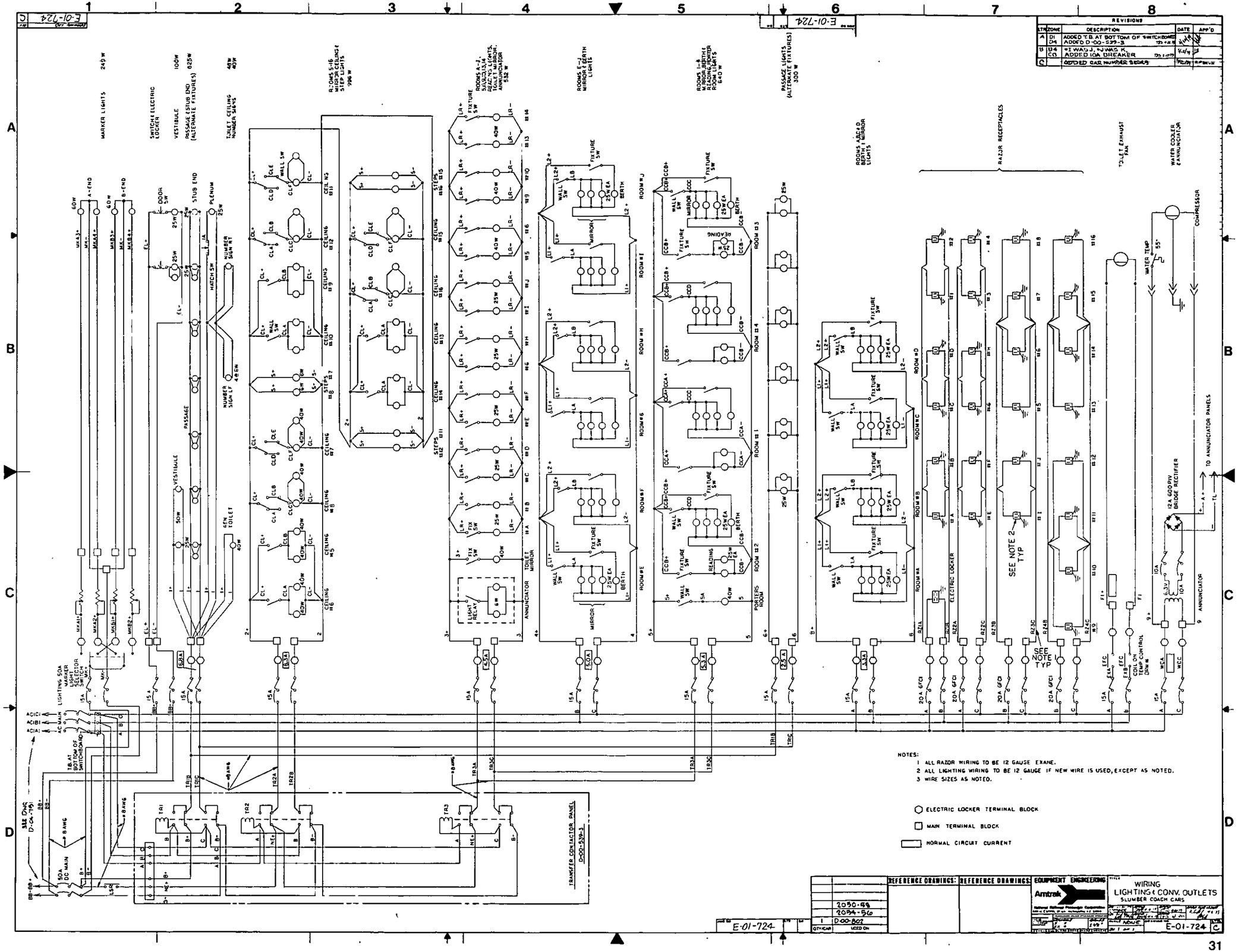

NOTES:
1 ALL RAZOR WIRING TO BE 12 GAUGE EXANE.
2 ALL LIGHTING WIRING TO BE 12 GAUGE IF NEW WIRE IS USED, EXCEPT AS NOTED.
3 WIRE SIZES AS NOTED.

○ ELECTRIC LOCKER TERMINAL BLOCK
□ MAIN TERMINAL BLOCK
▭ NORMAL CIRCUIT CURRENT

REVISIONS				
LTR	ZONE	DESCRIPTION	DATE	APP'D
A	D1 D4	ADDED T.B. AT BOTTOM OF SWITCHBOARD ADDED D-00-539-3		
B	B4 C0	#1 WAS J, #J WAS K, ADDED 10A BREAKER		
C		ADDED CAR NUMBER SIGNS		

QTY/CAR	USED ON
	2050-58
	2054-56
1	D-00-802

REFERENCE DRAWINGS: | REFERENCE DRAWINGS:

EQUIPMENT ENGINEERING
Amtrak
National Railroad Passenger Corporation

TITLE: WIRING LIGHTING & CONV. OUTLETS SLUMBER COACH CARS

E-01-724 C

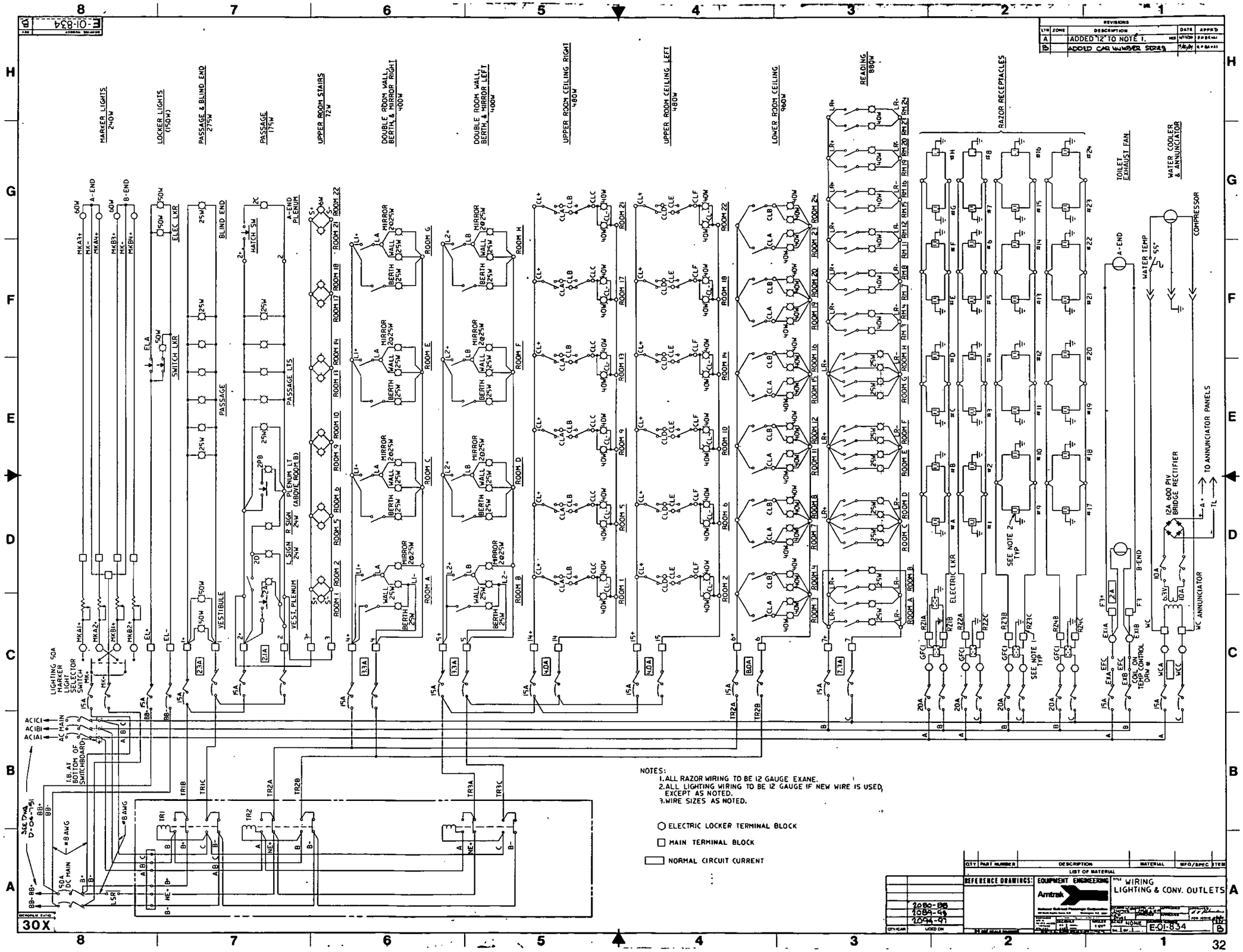

NOTES:
1. ALL RAZOR WIRING TO BE 12 GAUGE EXANE.
2. ALL LIGHTING WIRING TO BE 12 GAUGE IF NEW WIRE IS USED, EXCEPT AS NOTED.
3. WIRE SIZES AS NOTED.

○ ELECTRIC LOCKER TERMINAL BLOCK

□ MAIN TERMINAL BLOCK

▭ NORMAL CIRCUIT CURRENT

REVISIONS				
LTR	ZONE	DESCRIPTION	DATE	APPR'D
A		ADDED "12" TO NOTE 1.		
B		ADDED CAR NUMBER SERIES		

QTY	PART NUMBER	DESCRIPTION	MATERIAL	MFG/SPEC	ITEM
LIST OF MATERIAL					

REFERENCE DRAWINGS: 2080-88, 2089-90, 2094-91

EQUIPMENT ENGINEERING — Amtrak

TITLE: WIRING LIGHTING & CONV. OUTLETS

SCALE: NONE — DRAWING NUMBER: E-01-834 — SH. 1 OF 1 — REV: B

E-01-834 B

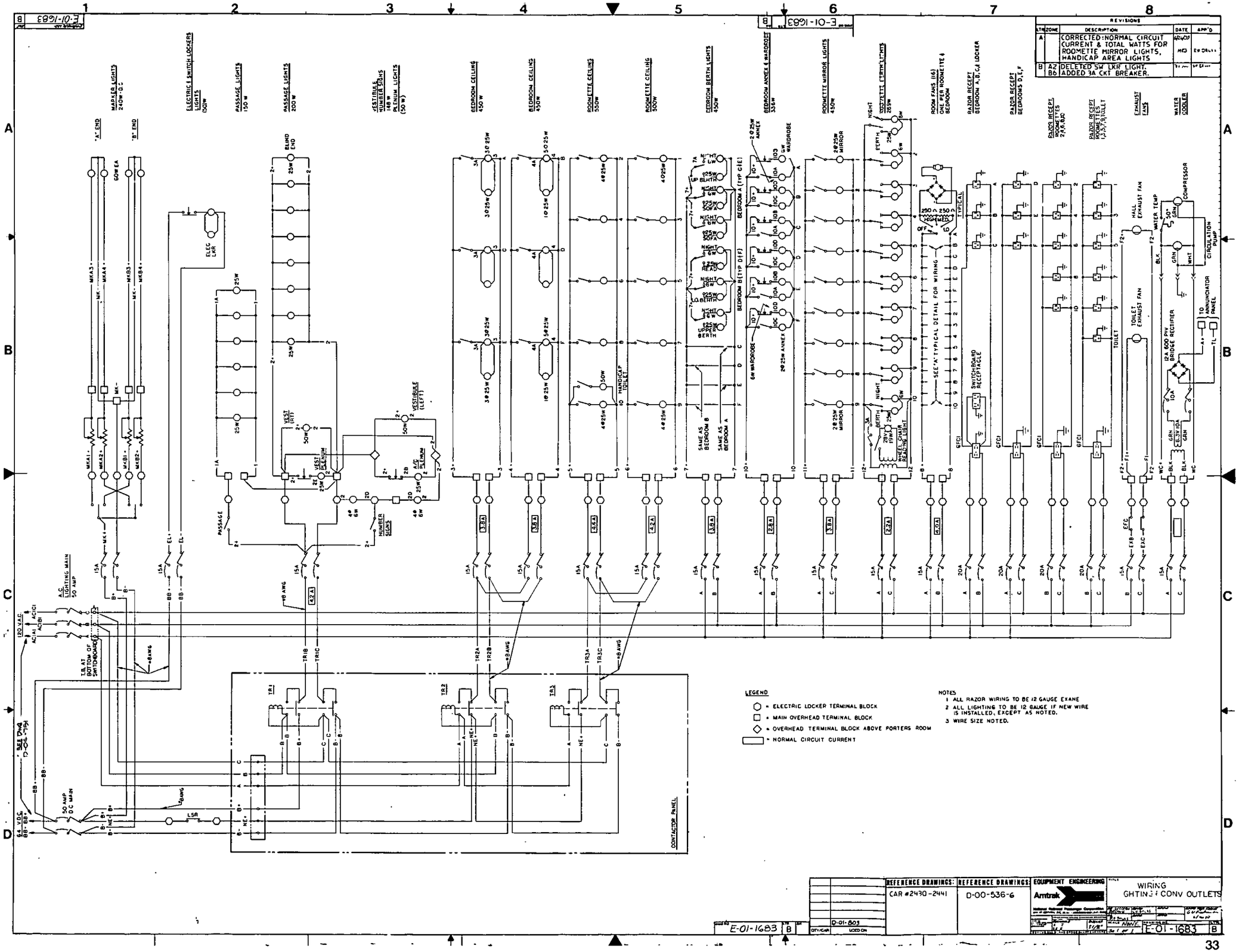

REVISIONS
LTR ZONE DESCRIPTION DATE APP'D
A CORRECTED: NORMAL CIRCUIT CURRENT & TOTAL WATTS FOR ROOMETTE MIRROR LIGHTS, HANDICAP AREA LIGHTS
B A2 B6 DELETED SW LKR LIGHT. ADDED 3A CKT BREAKER.
MARKER LIGHTS 240W-DC
ELECTRIC & SWITCH LOCKERS LIGHTS 150W
PASSAGE LIGHTS 150 W
PASSAGE LIGHTS 200 W
VESTIBULE NUMBER SIGNS 148 W
PLENUM LIGHTS (50 W)
BEDROOM CEILING 450 W
BEDROOM CEILING 450W
ROOMETTE CEILING 550W
ROOMETTE CEILING 500W
BEDROOM BERTH LIGHTS 450W
BEDROOM ANNEX & WARDROBE 336W
ROOMETTE MIRROR LIGHTS 450W
ROOMETTE BERTH LIGHTS 265W
ROOM FANS (16) ONE PER ROOMETTE & BEDROOM
RAZOR RECEPT BEDROOM A,B,C,& LOCKER
RAZOR RECEPT BEDROOMS D,E,F
RAZOR RECEPT ROOMETTES 2,4,6,8,10
RAZOR RECEPT ROOMETTES 1,3,5,7,9 TOILET
EXHAUST FANS
WATER COOLER
A.C. LIGHTING MAIN 50 AMP
T.B. AT BOTTOM OF SWITCHBOARD
50 AMP DC MAIN
64 VDC
120 VAC
CONTACTOR PANEL
TR1
TR2
TR3
LEGEND
○ = ELECTRIC LOCKER TERMINAL BLOCK
□ = MAIN OVERHEAD TERMINAL BLOCK
◇ = OVERHEAD TERMINAL BLOCK ABOVE PORTERS ROOM
▭ = NORMAL CIRCUIT CURRENT
NOTES
1 ALL RAZOR WIRING TO BE 12 GAUGE EXANE
2 ALL LIGHTING TO BE 12 GAUGE IF NEW WIRE IS INSTALLED, EXCEPT AS NOTED.
3 WIRE SIZE NOTED.
REFERENCE DRAWINGS: CAR #2430-2441
REFERENCE DRAWINGS: D-00-536-6
EQUIPMENT ENGINEERING
Amtrak
WIRING
GHTING & CONV OUTLETS
E-01-1683 B
D-01-803

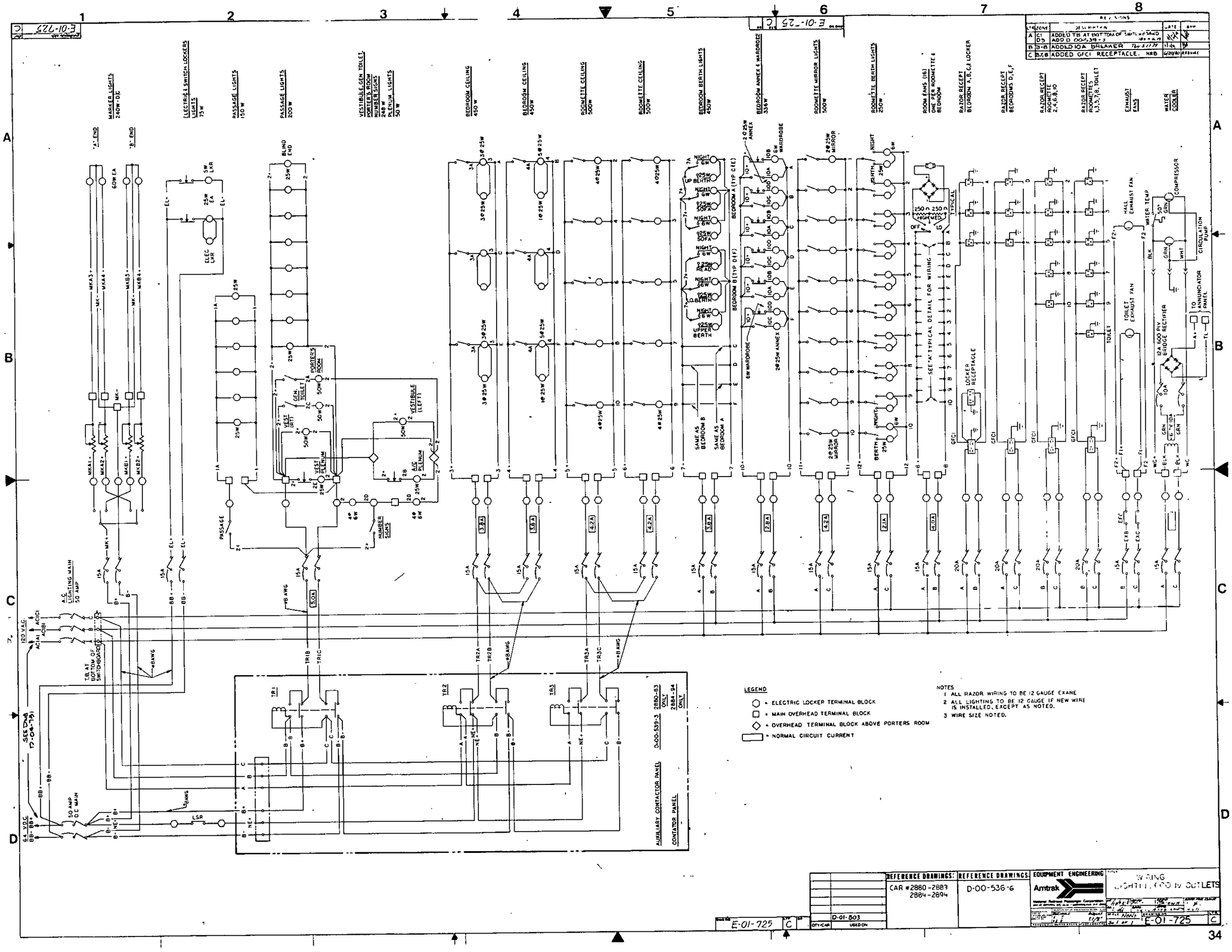

REVISIONS
A C1 D5 ADDED TB AT BOTTOM OF SWITCHBOARD ADD D 00-539-3
B 3-8 ADDED 10A BREAKER
C 3,7,8 ADDED GFCI RECEPTACLE. NRB
MARKER LIGHTS 240W-DC
ELECTRIC & SWITCH LOCKERS LIGHTS 75W
PASSAGE LIGHTS 150 W
PASSAGE LIGHTS 200 W
VESTIBULE, GEN TOILET, PORTER'S ROOM NUMBER SIGNS 248 W PLENUM LIGHTS 50 W
BEDROOM CEILING 450 W
BEDROOM CEILING 450W
ROOMETTE CEILING 500W
ROOMETTE CEILING 500W
BEDROOM BERTH LIGHTS 450W
BEDROOM ANNEX & WARDROBE 336W
ROOMETTE MIRROR LIGHTS 500W
ROOMETTE BERTH LIGHTS 250W
ROOM FANS (16) ONE PER ROOMETTE & BEDROOM
RAZOR RECEPT BEDROOM A,B,C,& LOCKER
RAZOR RECEPT BEDROOMS D,E,F
RAZOR RECEPT ROOMETTES 2,4,6,8,10
RAZOR RECEPT ROOMETTES 1,3,5,7,8, TOILET
EXHAUST FANS
WATER COOLER
A.C. LIGHTING MAIN 50 AMP
120 V.A.C.
64 V.D.C.
50 AMP D.C. MAIN
AUXILIARY CONTACTOR PANEL D-00-539-3 2880-83 ONLY 2884-94 ONLY
CONTATOR PANEL
LEGEND
○ = ELECTRIC LOCKER TERMINAL BLOCK
□ = MAIN OVERHEAD TERMINAL BLOCK
◇ = OVERHEAD TERMINAL BLOCK ABOVE PORTERS ROOM
▭ = NORMAL CIRCUIT CURRENT
NOTES
1 ALL RAZOR WIRING TO BE 12 GAUGE EXANE
2 ALL LIGHTING TO BE 12 GAUGE IF NEW WIRE IS INSTALLED, EXCEPT AS NOTED.
3 WIRE SIZE NOTED.
REFERENCE DRAWINGS: CAR #2880-2883 2884-2894
REFERENCE DRAWINGS: D-00-536-6
EQUIPMENT ENGINEERING
Amtrak
WIRING LIGHTING & 600 IV OUTLETS
E-01-725
D-01-803

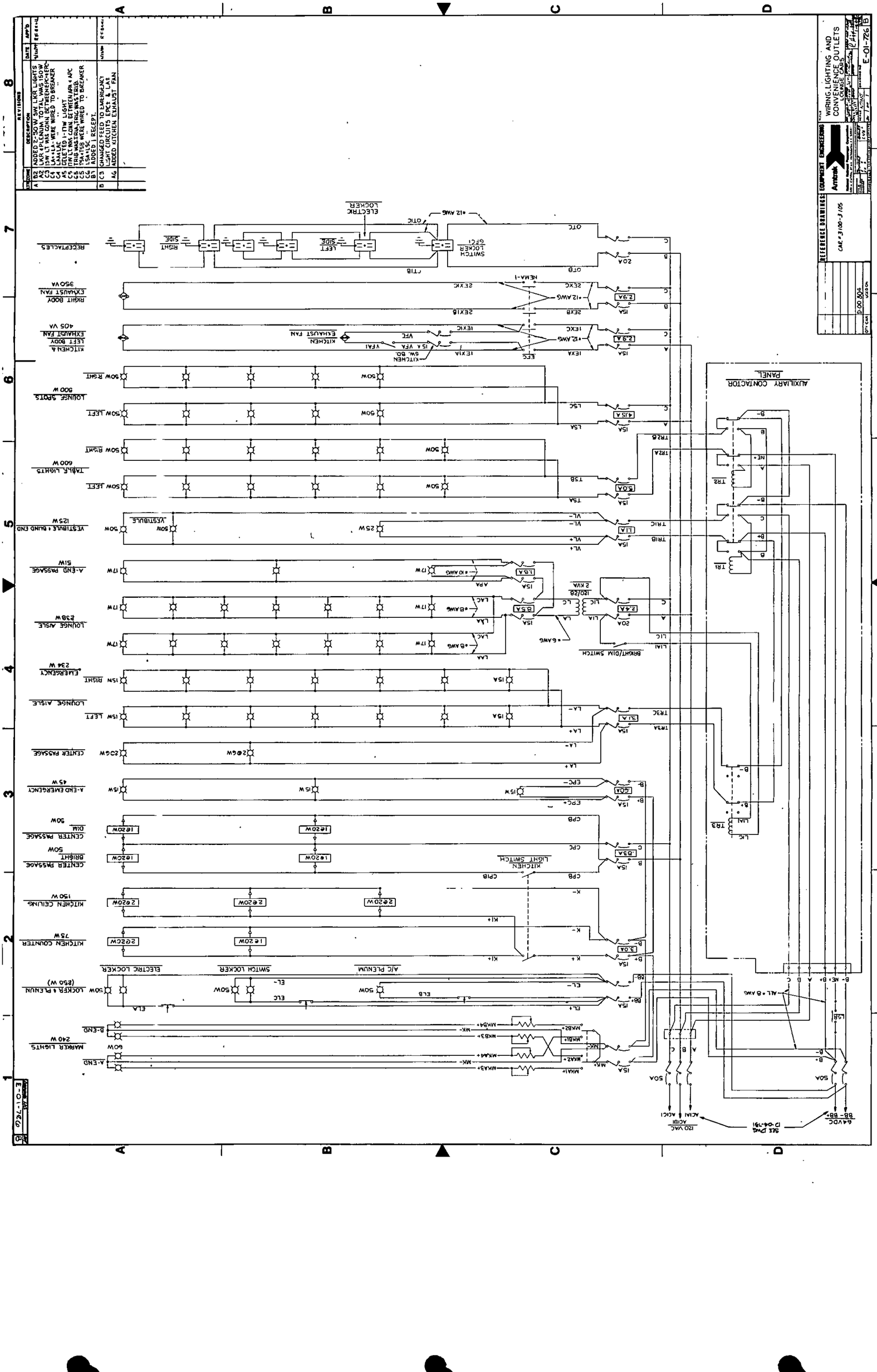
REVISIONS
DESCRIPTION
ADDED 2-300 W SW LKR LIGHTS
ADDED 2-300 W TOILET LIGHTS
1 SW LT WAS CONN. BETWEEN PERC+PERC-
LA+ +LA- WERE WIRED TO BREAKER
DELETED 1-ITW LIGHT
1 ITW LT WAS CONN. BETWEEN APA + APC
TRIG MAS TRIA, TRIG WAS TRIB
CHASS WIRE WIRED TO BREAKER
ADDED 1 RECEPT.
CHANGED FEED TO EMERGENCY
ADDED 1-LA
ADDED KITCHEN EXHAUST FAN
WIRING, LIGHTING AND CONVENIENCE OUTLETS
CARRIE CAYS
E-01-726
REFERENCE DRAWINGS
EQUIPMENT ENGINEERING
Amtrak
CAE # 3/00-3/05
D 00 804
REPEATSIDE
LEFT SIDE
RIGHT SIDE
SWITCH LOCKER GFCI
ELECTRIC LOCKER
#12 AWG
OTC
OTB
20A
2.9A
#12AWG
2EXC
2EXB
2EXIC
2EXIB
RIGHT BODY EXHAUST FAN 350VA
KITCHEN & LEFT BODY EXHAUST FAN 405 VA
KITCHEN EXHAUST FAN
KITCHEN SW. BD.
15A VFA
VFAI
VFC
1EXC
1EXB
1EXIC
1EXIB
EFC
LOUNGE SPOTS 300 W
50W RGHT
50W LEFT
4.5A
LSA
LSC
TABLE LIGHTS 600 W
TRSB
TRSA
5.0A
VESTIBULE & BUND END 125 W
VESTIBULE
TRIC
TRID
1.1A
A-END PASSAGE 51W
17W
#10 AWG
1.6A
APA
LOUNGE AISLE 238 W
#8 AWG
8.5A
LAC
LAA
LOUNGE AISLE
15W RIGHT
15W LEFT
TR3A
TR3C
3.1A
CENTER PASSAGE 230W
2@6W
A-END EMERGENCY 45 W
15W
EPC+
EPC-
60A
CENTER PASSAGE DIM 50W
CENTER PASSAGE BRIGHT 50W
1@20W
CPB
CPC
.63A
LIGHT SWITCH
KITCHEN CEILING 150 W
2@20W
K+
K-
KITCHEN COUNTER 75W
2@20W
1@20W
3.0A
A/C PLENUM
SWITCH LOCKER
ELECTRIC LOCKER
LOCKER & PLENUM (850 W)
50W
ELA
ELB
ELC
ELD
MARKER LIGHTS 240 W
A-END
B-END
60W
MKA1+
MKA2+
MKA3+
MKA4+
MKB1+
MKB2+
MKB3+
MKB4+
MK-
AUXILIARY CONTACTOR PANEL
TR1
TR2
TR3
BRIGHT/DIM SWITCH
120/28 2 KVA
2.4A
20A
LIA
LIC
LIE
#6 AWG
ALL #8 AWG
LSB
LSA
50A
64 VDC
BB+ BB-
120 VAC
ACIAI ACIC1
SEE DWG D-04-791

E-01-835

REVISIONS			
STR ZONE	DESCRIPTION	DATE	APP'D

MARKER LIGHTS 240 W
A-END 60W
B-END
LOCKER 1 PLENUM (216 W)
STORAGE LOCKERS
SWITCH LOCKER
ELECTRIC LKR.
KITCHEN COUNTER 75 W
KITCHEN CEILING 150 W
CENTER PASSAGE BRIGHT 50W
CENTER PASSAGE DIM 50W
KITCHEN LIGHT SWITCH
CENTER PASSAGE EMERGENCY 24 W
LOUNGE AISLE EMERGENCY 270W
LOUNGE AISLE 540W
PASSAGE & BLIND END 150W
A-END PASSAGE
A-BLIND END
B-BLIND END
PASSAGE
TABLE SPOTS 600 W
LOUNGE 566 VA
LOUNGE COVE
LOUNGE SPOT
KITCHEN & RIGHT BODY EXHAUST FAN 405 VA
KITCHEN EXHAUST FAN
LEFT BODY EXHAUST FAN 950 VA
RECEPTACLES
RIGHT SIDE
LEFT SIDE
ELECTRIC LOCKER
SWITCH LOCKER GFCI
BRIGHT-DIM SWITCH
120 VAC ACB1
ACIN & ACIC1
64 VDC BB+ BB-
SEE DWG 12-04-794
ALL #8 AWG
AUXILIARY CONTACTOR PANEL

REFERENCE DRAWINGS:	EQUIPMENT ENGINEERING	TITLE
CAR # 3106-3112	Amtrak	WIRING, LIGHTING AND CONVENIENCE OUTLETS LOUNGE CARS
D-00-804 QTY/CAR: USED ON		E-01-835

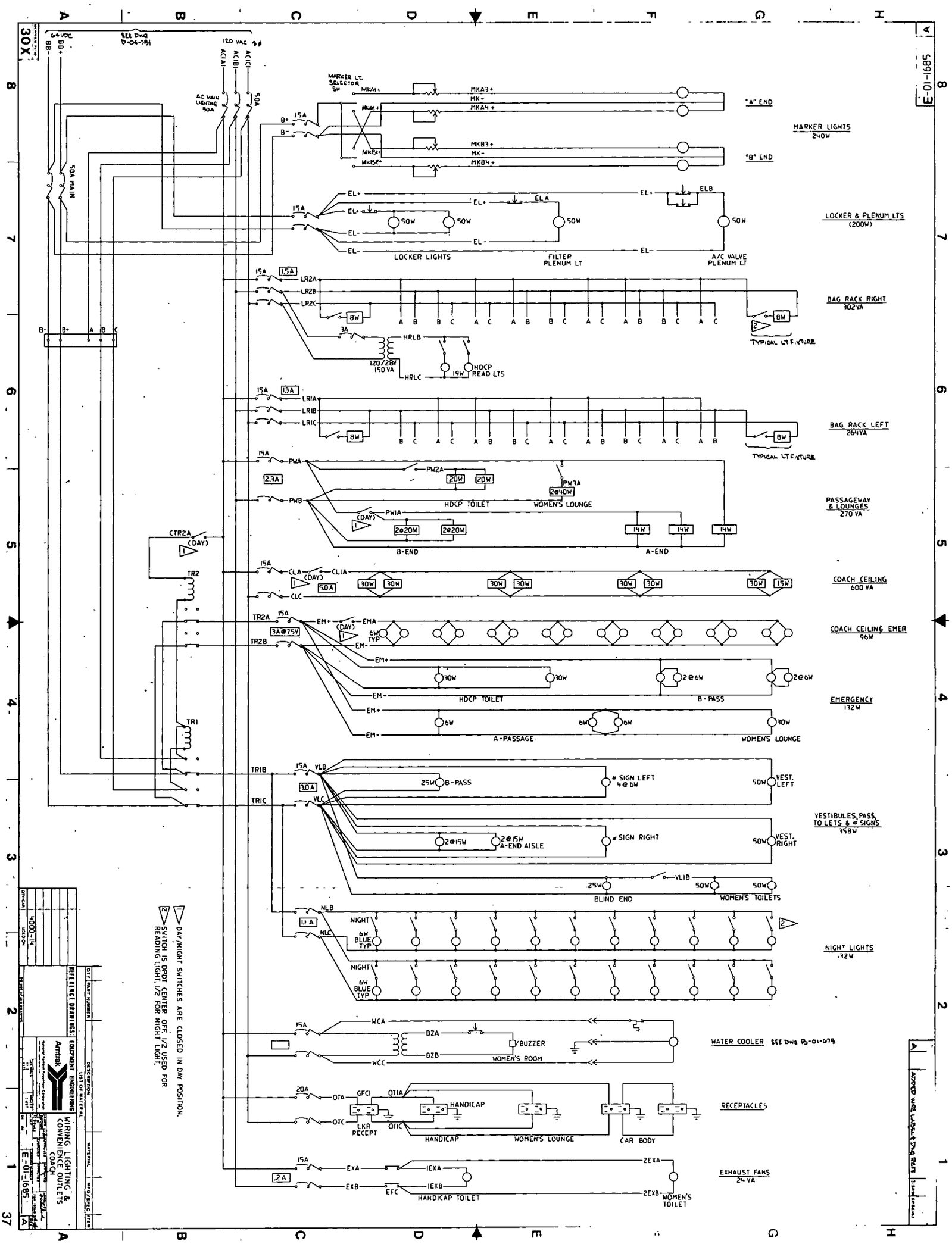

E-01-1685
MARKER LIGHTS 240W
"A" END
"B" END
LOCKER & PLENUM LTS (200W)
LOCKER LIGHTS
FILTER PLENUM LT
A/C VALVE PLENUM LT
BAG RACK RIGHT 302VA
TYPICAL LT FIXTURE
HDCP READ LTS
BAG RACK LEFT 264VA
PASSAGEWAY & LOUNGES 270 VA
HDCP TOILET
WOMEN'S LOUNGE
B-END
A-END
COACH CEILING 600 VA
COACH CEILING EMER 96W
EMERGENCY 132W
B-PASS
A-PASSAGE
VESTIBULES, PASS, TOILETS & # SIGNS 358W
SIGN LEFT 4@6W
SIGN RIGHT
A-END AISLE
BLIND END
WOMEN'S TOILETS
NIGHT LIGHTS 132W
WATER COOLER SEE DWG B-01-678
BUZZER
WOMEN'S ROOM
RECEPTACLES
HANDICAP
LKR RECEPT
CAR BODY
EXHAUST FANS 24 VA
HANDICAP TOILET
WOMEN'S TOILET
DAY/NIGHT SWITCHES ARE CLOSED IN DAY POSITION.
SWITCH IS DPDT CENTER OFF. 1/2 USED FOR READING LIGHT, 1/2 FOR NIGHT LIGHT.
REFERENCE DRAWINGS:
EQUIPMENT ENGINEERING
Amtrak
WIRING LIGHTING & CONVENIENCE OUTLETS COACH
E-01-1685

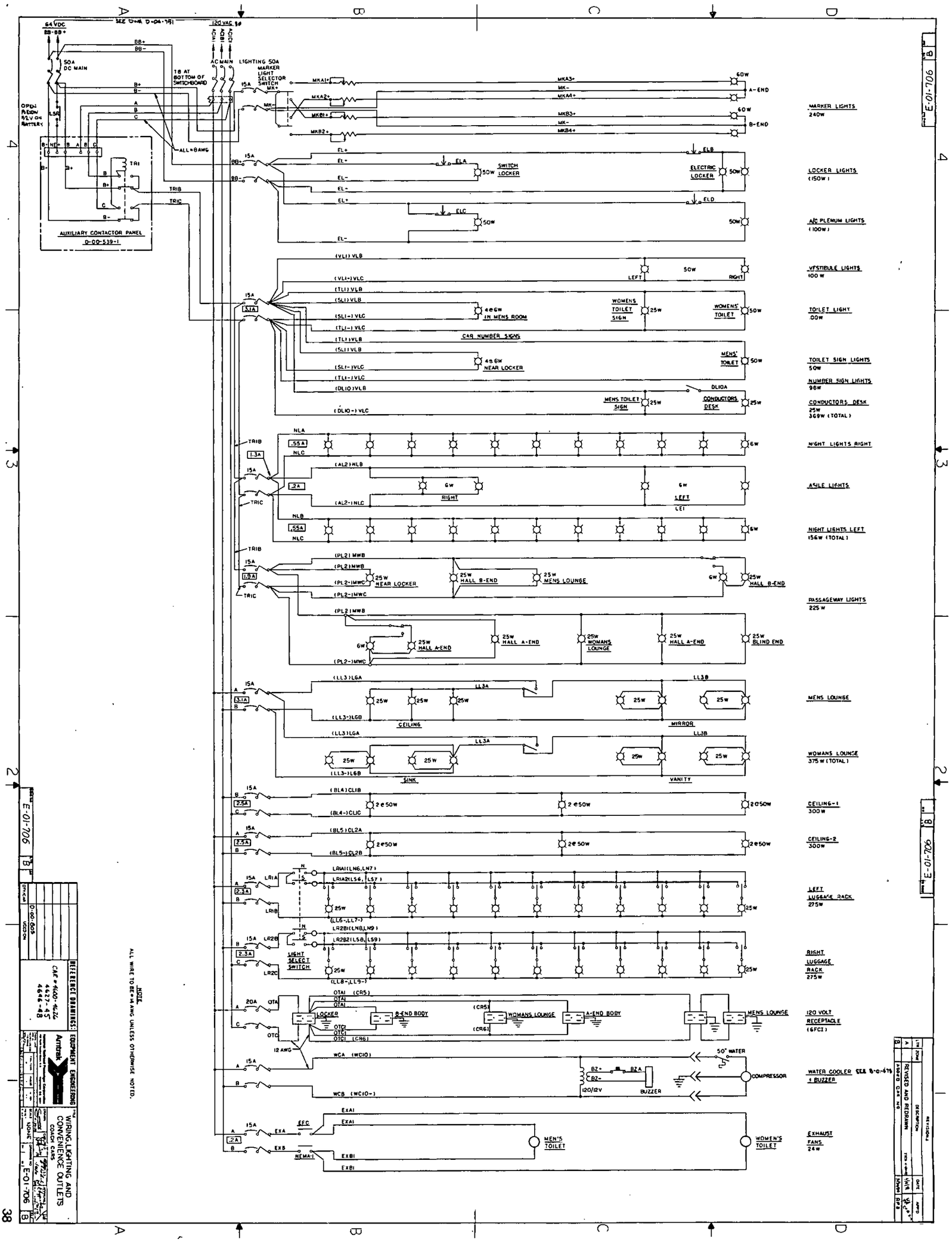

AUXILIARY CONTACTOR PANEL
D-00-539-1
50A DC MAIN
TB AT BOTTOM OF SWITCHBOARD
LIGHTING 50A
MARKER LIGHT SELECTOR SWITCH
MARKER LIGHTS 240W
LOCKER LIGHTS (150W)
A/C PLENUM LIGHTS (100W)
VESTIBULE LIGHTS 100W
TOILET LIGHT 100W
TOILET SIGN LIGHTS 50W
NUMBER SIGN LIGHTS 98W
CONDUCTORS DESK 25W 369W (TOTAL)
NIGHT LIGHTS RIGHT
ASILE LIGHTS
NIGHT LIGHTS LEFT 156W (TOTAL)
PASSAGEWAY LIGHTS 225W
MENS LOUNGE
WOMANS LOUNGE 375W (TOTAL)
CEILING-1 300W
CEILING-2 300W
LEFT LUGGAGE RACK 275W
RIGHT LUGGAGE RACK 275W
120 VOLT RECEPTACLE (6FCI)
WATER COOLER SEE B-01-679 + BUZZER
EXHAUST FANS 24W
SWITCH LOCKER
ELECTRIC LOCKER
CAR NUMBER SIGNS
WOMENS TOILET SIGN
WOMENS' TOILET
MENS' TOILET
MENS TOILET SIGN
CONDUCTORS DESK
NEAR LOCKER
HALL B-END
MENS LOUNGE
HALL A-END
WOMANS LOUNGE
BLIND END
CEILING
MIRROR
SINK
VANITY
LIGHT SELECT SWITCH
LOCKER
B-END BODY
A-END BODY
COMPRESSOR
BUZZER
MEN'S TOILET
WOMEN'S TOILET
NOTE
ALL WIRE TO BE #14 AWG UNLESS OTHERWISE NOTED.
REFERENCE DRAWINGS:
CAR #4600-4626
4627-45
4646-48
EQUIPMENT ENGINEERING
Amtrak
WIRING, LIGHTING AND CONVENIENCE OUTLETS
COACH CARS
E-01-706
REVISED AND REDRAWN

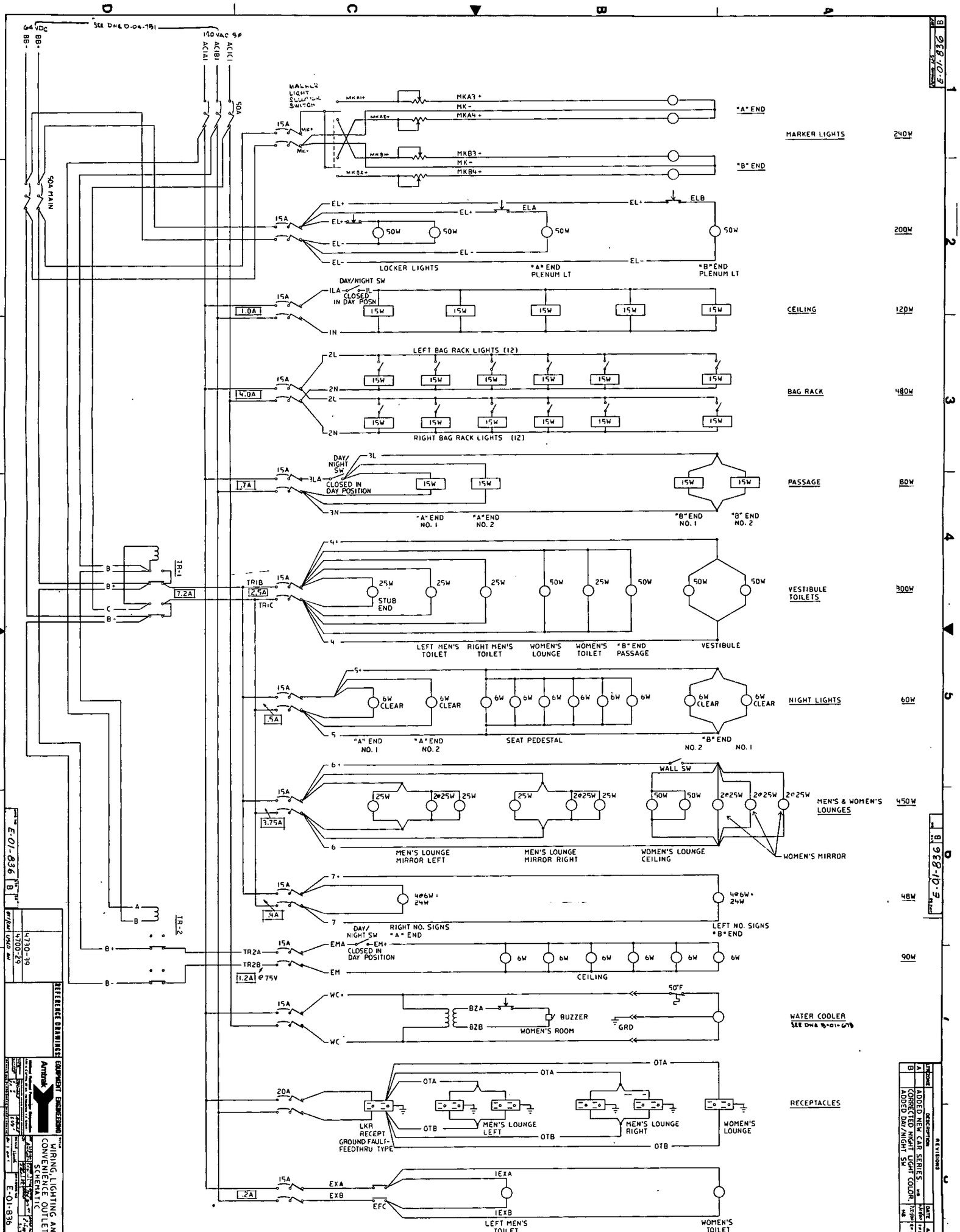

MARKER LIGHTS 240W
"A" END
"B" END
LOCKER LIGHTS
"A" END PLENUM LT
"B" END PLENUM LT
200W
CEILING 120W
LEFT BAG RACK LIGHTS (12)
RIGHT BAG RACK LIGHTS (12)
BAG RACK 480W
PASSAGE 80W
"A" END NO. 1
"A" END NO. 2
"B" END NO. 1
"B" END NO. 2
VESTIBULE TOILETS 300W
LEFT MEN'S TOILET
RIGHT MEN'S TOILET
WOMEN'S LOUNGE
WOMEN'S TOILET
"B" END PASSAGE
VESTIBULE
NIGHT LIGHTS 60W
SEAT PEDESTAL
MEN'S & WOMEN'S LOUNGES 450W
MEN'S LOUNGE MIRROR LEFT
MEN'S LOUNGE MIRROR RIGHT
WOMEN'S LOUNGE CEILING
WOMEN'S MIRROR
48W
RIGHT NO. SIGNS "A" END
LEFT NO. SIGNS "B" END
90W
CEILING
WATER COOLER
BUZZER
WOMEN'S ROOM
RECEPTACLES
LKR RECEPT GROUND FAULT-FEEDTHRU TYPE
MEN'S LOUNGE LEFT
MEN'S LOUNGE RIGHT
WOMEN'S LOUNGE
LEFT MEN'S TOILET
WOMEN'S TOILET
REFERENCE DRAWINGS
EQUIPMENT ENGINEERING
Amtrak
WIRING, LIGHTING AND CONVENIENCE OUTLETS SCHEMATIC
E-01-836
ADDED NEW CAR SERIES
CORRECTED NIGHT LIGHT COLOR
ADDED DAY/NIGHT SW

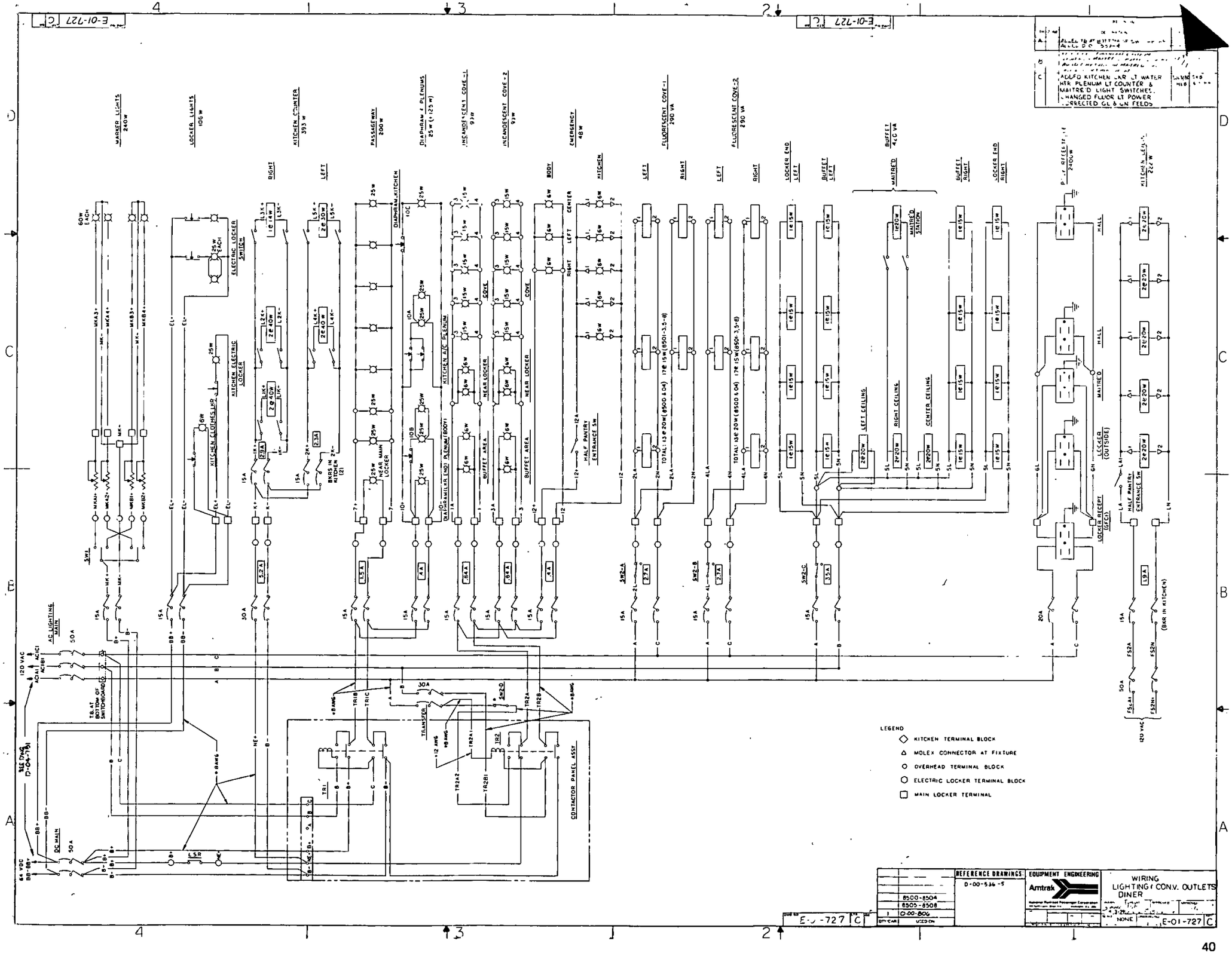

E-01-727 C
MARKER LIGHTS 240W
LOCKER LIGHTS 106W
KITCHEN COUNTER 393 W
PASSAGEWAY 200W
DIAPHRAM & PLENUMS 25W (+125W)
INCANDESCENT COVE-1 97W
INCANDESCENT COVE-2 97W
EMERGENCY 48W
FLUORESCENT COVE-1 290 VA
FLUORESCENT COVE-2 290 VA
BUFFET 420 VA
KITCHEN LIGHTS 224 W
ELECTRIC LOCKER SWITCH
KITCHEN ELECTRIC LOCKER
KITCHEN CLOTHES LKR
KITCHEN A/C PLENUM
NEAR LOCKER
BUFFET AREA
HALF PANTRY ENTRANCE SW
LEFT CEILING
RIGHT CEILING
CENTER CEILING
MAITRE'D STATION
LOCKER RECEPT (GFCI)
HALL
LOCKER (OUTSIDE)
AC LIGHTING MAIN
DC MAIN
CONTACTOR PANEL ASSY
TRANSFER
LEGEND
KITCHEN TERMINAL BLOCK
MOLEX CONNECTOR AT FIXTURE
OVERHEAD TERMINAL BLOCK
ELECTRIC LOCKER TERMINAL BLOCK
MAIN LOCKER TERMINAL
REFERENCE DRAWINGS
D-00-536-5
EQUIPMENT ENGINEERING
Amtrak
WIRING
LIGHTING & CONV. OUTLETS
DINER
8500-8504
8505-8508
D-00-806
NONE
E-01-727 C

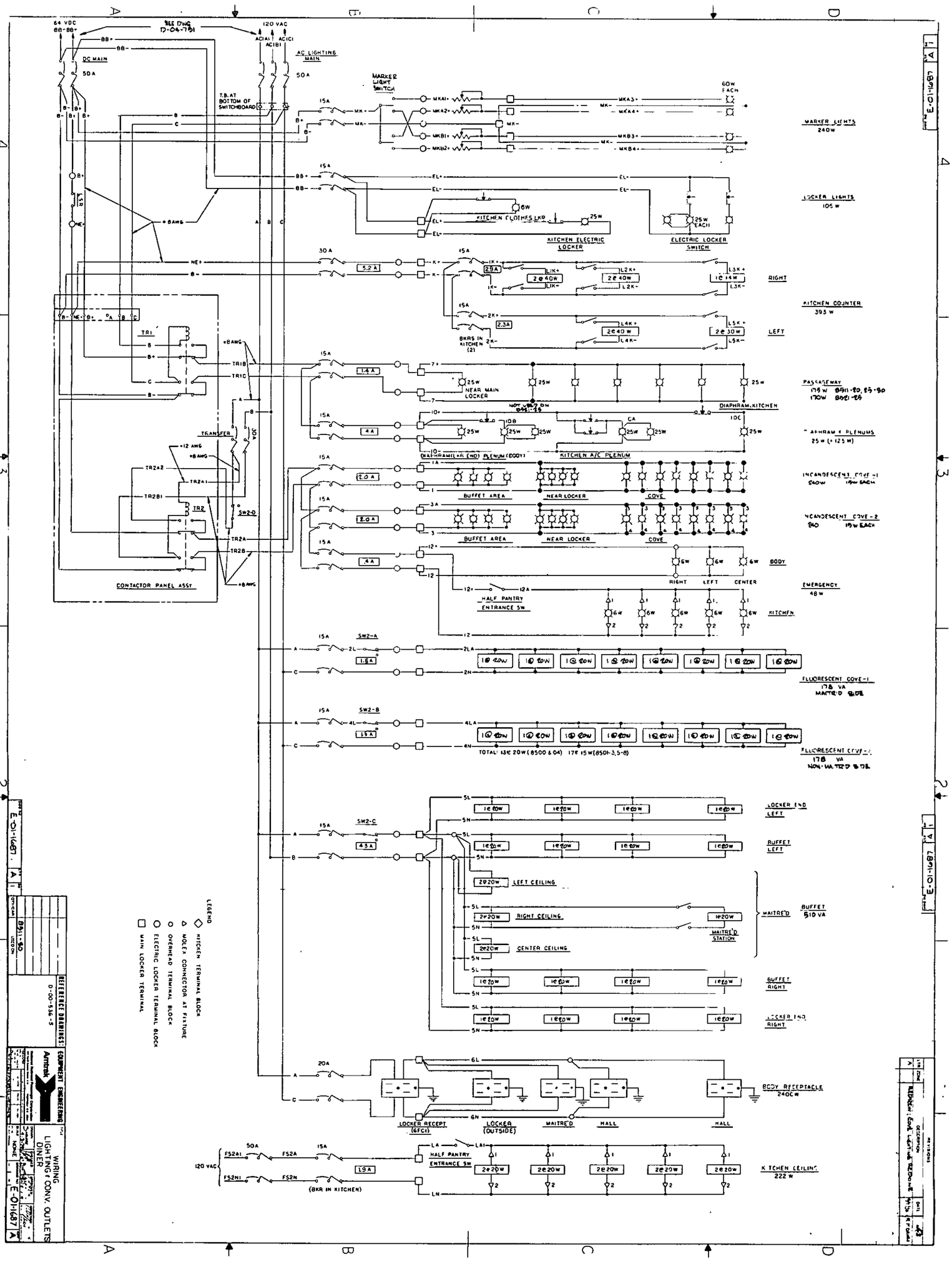

64 VDC
120 VAC
DC MAIN
AC LIGHTING MAIN
MARKER LIGHT SWITCH
MARKER LIGHTS 240W
LOCKER LIGHTS 105 W
KITCHEN ELECTRIC LOCKER
ELECTRIC LOCKER SWITCH
KITCHEN COUNTER 393 W
RIGHT
LEFT
PASSAGEWAY
DIAPHRAM KITCHEN
KITCHEN A/C PLENUM
INCANDESCENT COVE-1
INCANDESCENT COVE-2
BUFFET AREA
NEAR LOCKER
COVE
BODY
EMERGENCY 48 W
HALF PANTRY ENTRANCE SW
KITCHEN
CONTACTOR PANEL ASSY
TRANSFER
FLUORESCENT COVE-1
FLUORESCENT COVE-2
LOCKER END LEFT
BUFFET LEFT
LEFT CEILING
RIGHT CEILING
CENTER CEILING
MAITRE'D
MAITRE'D STATION
BUFFET 510 VA
BUFFET RIGHT
LOCKER END RIGHT
BODY RECEPTACLE 240CW
LOCKER RECEPT (GFCI)
LOCKER (OUTSIDE)
HALL
KITCHEN CEILING 222 W
LEGEND
KITCHEN TERMINAL BLOCK
MOLEX CONNECTOR AT FIXTURE
OVERHEAD TERMINAL BLOCK
ELECTRIC LOCKER TERMINAL BLOCK
MAIN LOCKER TERMINAL
REFERENCE DRAWINGS: D-00-536-5
EQUIPMENT ENGINEERING
Amtrak
WIRING LIGHTING & CONV. OUTLETS DINER
E-01-1687

E-01-526

REVISIONS				
LTR	ZONE	DESCRIPTION	DATE	APP'D
A	C-3	19C, 20C, BLR1, 19A, 20A, BLR2 WERE CONNECTED TO WON LOCKER END TERMINAL BLOCK, PS16 WAS @ PS16 A OPEN + B OPEN LESS THAN 5 PS10 A CLOSED & B OPEN	5/1977	RF 77-43
B	ALL	CORRECTION 23A & 23D ON D-END LR. BL+ & BLR2 & 20A CHANGED TO MATCH CAR AS BUILT	6/78	RF 78-43
C		CHG USED ON, ADD REF DWG BLOCKS	4/79	TD 0440 D-1503

DUMMY — LEFT — RIGHT RECEPTACLES

A-END J-BOX

RECEPTACLES — LEFT — RIGHT — DUMMY

N° INDICATES 27 POINT RECEPTACLE PIGTAIL WIRE TAG N°

#10 AWG ALL OTHERS #12 AWG EXCEPT SHIELDED WHICH IS 14/2

2D	LOOP RELAY COIL	
TB-	BATTERY NEGATIVE	
PA1	TAPE MUSIC-1	(BLK)
PA2	TAPE MUSIC-1	(WHT)
PA3	PA (INTERCOM	(BLK)
PA4	PA (INTERCOM	(WHT)
PA5	PA CONTROL	(BLK)
PA6	PA CONTROL	(WHT)
RA1	RADIO	(BLK)
RA2	RADIO	(WHT)
EP1	BRAKE APPLICATION	
EP2	BRAKE RELEASE	
EP3	BRAKE NEGATIVE	
D1	DOOR CONTROL	14
D2	DOOR CONTROL	15
D3	DOOR CONTROL	16
D4	DOOR CONTROL	17
DC1A	DOOR CLOSE LIGHT	18
BRB	BRAKE RELEASE LIGHT	
BAB	BRAKE APPLIED LIGHT	
HJ	HOT JOURNAL	
CS	CONDUCTOR SIGNAL	
DC2A	DOOR CLOSE LIGHT	23
PA7	TAPE MUSIC-2	(BLK)
PA8	TAPE MUSIC-2	(WHT)
BLS	CONDUCTOR DOOR CLOSED LIGHT	
AN	ATTENDANT CALL	
BL+		
BLR2		
SP1		
SP2		

N8 INDICATES 27 POINT RECEPTACLE PIGTAIL WIRE TAG N8

B-END J-BOX

ALL #12 AWG EXCEPT WIRE-2 WHICH IS #10 AWG

NOTE POLARITY

AIR BRAKE PRESSURE SWITCHES

MORE THAN 23 PSIG B OPEN & A CLOSED

LESS THAN 10 PSIG B CLOSED & A OPEN

ELECTRIC LOCKER TERMINAL STRIP (COACH ONLY)

PA UNITS

BAGGAGE & BAGDORM ONLY

ALL OTHER CARS

TB-2

TB-1

CONDUCTOR SIGNAL

A-END

B-END

A-END COND SIGNAL

B-END

LR-A

LR-B

LOOP RELAY PANEL

E-5 DECELOSTAT PLUG

SPARES (TAPE UP)

NOTE:
SEE DRAWING E-01-1498 & E-01-1499 FOR 27 PT JUMPER SCHEMATICS

REFERENCE DRAWINGS:	
D-00-805 (4600)	
D-00-802 (2880)	
8600-03	
4600-26	
2880-83	

EQUIPMENT ENGINEERING — Amtrak

TITLE: COMMUNICATIONS TRAINLINE SCHEMATIC
4600 COACH & 2880 SLEEPER CARS

E-01-526

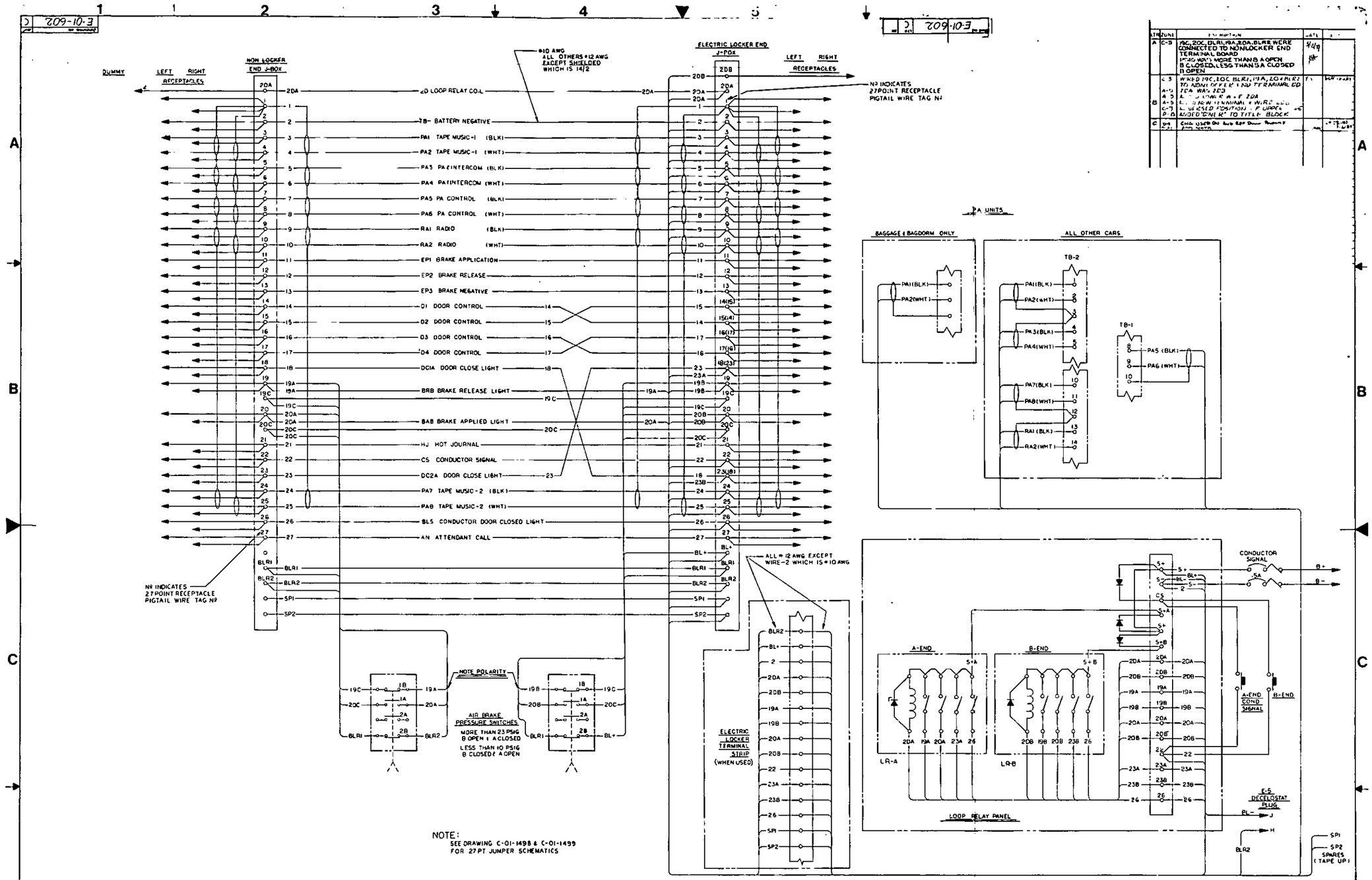

NOTE:
SEE DRAWING C-01-1498 & C-01-1499 FOR 27PT JUMPER SCHEMATICS

QTY/CAR	USED ON	QTY/CAR	USED ON	QTY/CAR	USED ON	QTY/CAR	USED ON	QTY/CAR	USED ON	QTY/CAR	USED ON	QTY/CAR	USED ON
			8505-08		4730-39		3113-17		2871-79		2430-56		1626-27
			8500-04		4700-29		3112		2482		2089-97		1622-25
	8526-28		7600-18		4649-50		3106-11		2474-81		2080-88		1619-21
	8521-25		7000-07		4626-48		3100-05		2469-73		2054-56		1618
	8511-20		5000-08		4000-26		2895-96		2461-68		2050-53		1614-17
	8509-10		4740-42		3118-27		2884-94		2457-60		1628-37		1610-13

REFERENCE DRAWINGS:	REFERENCE DRAWINGS:
	D-00-806
	D-00-802
	D-00-801

EQUIPMENT ENGINEERING
Amtrak
National Railroad Passenger Corporation

TITLE: COMMUNICATIONS TRAINLINE SCHEMATIC
BAG/DORM, SLUMBER COACH, & DINER

E-01-602 C

REVISIONS				
LTR	ZONE	DESCRIPTION	DATE	APP'D
A	A-2 A3	ADDED SPKR LOCATION DIAGRAM 7 SPKS WAS 8 ADDED "SLUMBERCOACH" TO SPKR1	12/6/79	RF BRUNS
B	A 5 A 6 A 7	P.A. CONTROL PANEL TB1 WAS ON RIGHT, TB2 WAS ON LEFT. ADDED DOOR SWITCH & P.A. LIGHT	5/14/80	RF BRUNS
C		ADDED NEW CAR SERIES.	11/17/80 NRA	RF BRUNS 11/17/80

SPEAKER ADJACENT TO CONTROL PANEL

2050'S SLUMBER COACH- 7 PASSAGEWAY SPEAKERS
2880'S SLEEPER- 8 HALLWAY SPEAKERS
SPKR 2-9

SLUMBERCOACH TOILET SPEAKER
SPKR1

SPEAKER ASSEMBLY (WITH XFORMER)
LDSPKR1

DOOR SWITCH
P.A. LIGHT

P.A. CONTROL PANEL

TB1: 1 PA+, 2 PA-, 3, 4, 5, 6, 7, 8 PA5 BLK, 9 PA6 WHT, 10, 11, 12, 13, 14

TB2: 1 BLK PA1, 2 WHT PA2, 3, 4 BLK PA3, 5 WHT PA4, 6 BLK LSP1, 7 WHT LSP2, 8 BLK SPK1, 9 WHT SPK2, 10 BLK PA7, 11 WHT PA8, 12, 13 BLK RA1, 14 WHT RA2

NOTE: BASE OF P.A. CONTROL PANEL MUST BE GROUNDED TO CAR STRUCTURE

BELDEN 8471
SPK1, SPK2 } BLK WHT

BELDEN 8471
LSP1, LSP2 } BLK WHT

#12
PA+
PA-
P/A CIRCUIT BREAKER

FLOOR LINE

TYPICAL RECEPTACLE WIRING (4 PLACES)
1 PA1
3 PA2
4 PA3
5 PA4
6 PA5
7 PA6
8 RA1
9 RA2
10 PA7
24 PA8
25

27 POINT RECEPTACLE LEFT SIDE

BELDEN 8719
PA1, PA2, PA3, PA4, PA5, PA6, RA1, RA2, PA7, PA8

27 POINT RECEPTACLE RIGHT SIDE
1, 3, 4, 5, 6, 7, 8, 9, 10, 24, 25

"A" END

TB1: SHD, PA1, PA2, PA3, PA4, PA5, PA6, RA1, RA2, PA7, PA8

PA1 (BLK)
PA2 (WHT)
PA3 (BLK)
PA4 (WHT)
PA5 (BLK)
PA6 (WHT)
RA1 (BLK)
RA2 (WHT)
PA7 (BLK)
PA8 (WHT)

LOCATED IN 'A' END T/L JUNCTION BOX SEE DWG#

BELDEN 8720 5 PAIRS

TB2: SHD, PA1, PA2, PA3, PA4, PA5, PA6, RA1, RA2, PA7, PA8

LOCATED IN 'B' END T/L JUNCTION BOX SEE DWG#

"B" END

27 POINT RECEPTACLE LEFT SIDE
25, 24, 10, 9, 8, 7, 6, 5, 4, 3, 1

27 POINT RECEPTACLE RIGHT SIDE
25, 24, 10, 9, 8, 7, 6, 5, 4, 3, 1

TRAINLINE WIRE FUNCTIONS	
WIRE CODE	FUNCTION
PA1, PA2	CALL P.A. AND TAPE MUSIC #1
PA3, PA4	CALL INTERCOM
PA5, PA6	P.A. CONTROL
RA1, RA2	RADIO (FUTURE USE)
PA7, PA8	TAPE MUSIC #2 (FUTURE USE)

QTY/CAR	USED ON
	2871-96

QTY/CAR	USED ON
	2430-82
	2080-97
	2050-56

P.A. CONTROL PANEL (LOCATED ABOVE WATER COOLER)

B-END

P.A. CONTROL PANEL (LOCATED ABOVE WATER COOLER)

SLEEPER

SPEAKER (TYP)

SLUMBERCOACH

SPEAKER LOCATIONS

A-END

REFERENCE DRAWINGS:
D-00-802
D-00-803

EQUIPMENT ENGINEERING
Amtrak
National Railroad Passenger Corporation
955 L'Enfant Plaza North, S.W., Washington, D.C. 20024

TITLE
PUBLIC ADDRESS WIRING DIAGRAM
SLEEPER & SLUMBER COACH

DRAWN	CHECKED	APPROVED	APPROVED
Sarnot 4-8-79	HA 4/10/79	[illegible] 4-12-79	[illegible]

SCALE NONE
DRAWING NO D-04-775
REV C
SH 1 OF 1

DO NOT SCALE DRAWING
REMOVE ALL BURRS-BREAK SHARP CORNERS

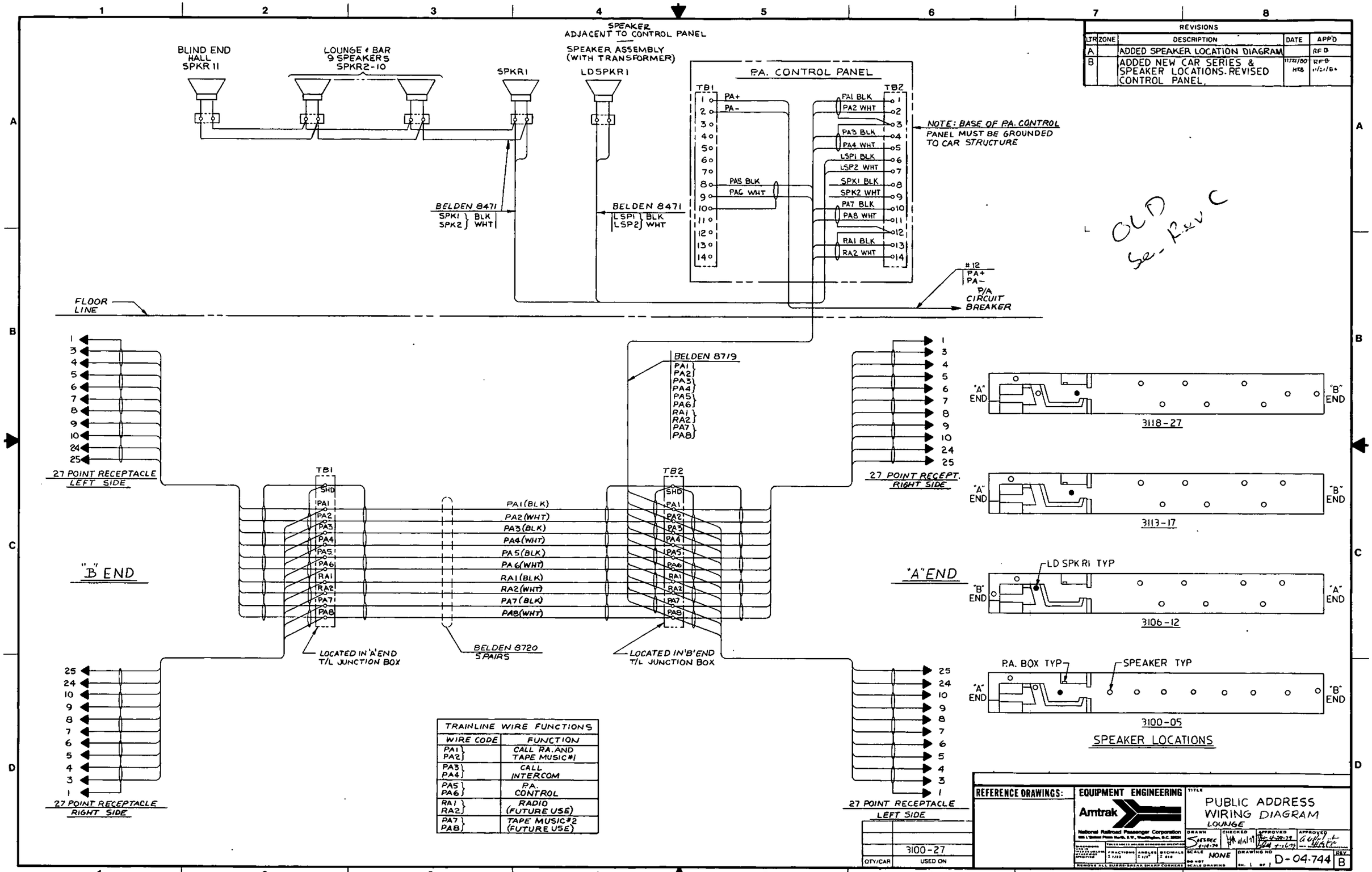

REVISIONS
LTR ZONE DESCRIPTION DATE APP'D
A ADDED SPEAKER LOCATION DIAGRAM RFB
B ADDED NEW CAR SERIES & SPEAKER LOCATIONS. REVISED CONTROL PANEL. 11/21/80 HEB RFB 11/21/80
BLIND END HALL SPKR 11
LOUNGE & BAR 9 SPEAKERS SPKR2-10
SPKR1
SPEAKER ADJACENT TO CONTROL PANEL
SPEAKER ASSEMBLY (WITH TRANSFORMER)
LDSPKR1
P.A. CONTROL PANEL
TB1
TB2
PA+
PA-
PA1 BLK
PA2 WHT
PA3 BLK
PA4 WHT
LSP1 BLK
LSP2 WHT
SPK1 BLK
SPK2 WHT
PA7 BLK
PA8 WHT
RA1 BLK
RA2 WHT
PA5 BLK
PA6 WHT
NOTE: BASE OF P.A. CONTROL PANEL MUST BE GROUNDED TO CAR STRUCTURE
BELDEN 8471
SPK1 SPK2 BLK WHT
LSP1 LSP2 BLK WHT
#12 PA+ PA-
P/A CIRCUIT BREAKER
FLOOR LINE
BELDEN 8719
PA1 PA2 PA3 PA4 PA5 PA6 RA1 RA2 PA7 PA8
27 POINT RECEPTACLE LEFT SIDE
27 POINT RECEPT. RIGHT SIDE
"B" END
"A" END
PA1(BLK)
PA2(WHT)
PA3(BLK)
PA4(WHT)
PA5(BLK)
PA6(WHT)
RA1(BLK)
RA2(WHT)
PA7(BLK)
PA8(WHT)
LOCATED IN 'A' END T/L JUNCTION BOX
BELDEN 8720 5 PAIRS
LOCATED IN 'B' END T/L JUNCTION BOX
27 POINT RECEPTACLE RIGHT SIDE
27 POINT RECEPTACLE LEFT SIDE
3118-27
3113-17
LD SPK R1 TYP
3106-12
P.A. BOX TYP
SPEAKER TYP
3100-05
SPEAKER LOCATIONS
OLD Se. Rev C
TRAINLINE WIRE FUNCTIONS
WIRE CODE FUNCTION
PA1 PA2 CALL P.A. AND TAPE MUSIC #1
PA3 PA4 CALL INTERCOM
PA5 PA6 P.A. CONTROL
RA1 RA2 RADIO (FUTURE USE)
PA7 PA8 TAPE MUSIC #2 (FUTURE USE)
3100-27
QTY/CAR USED ON
REFERENCE DRAWINGS:
EQUIPMENT ENGINEERING
Amtrak
National Railroad Passenger Corporation
TITLE PUBLIC ADDRESS WIRING DIAGRAM LOUNGE
SCALE NONE
DRAWING NO D-04-744
REV B

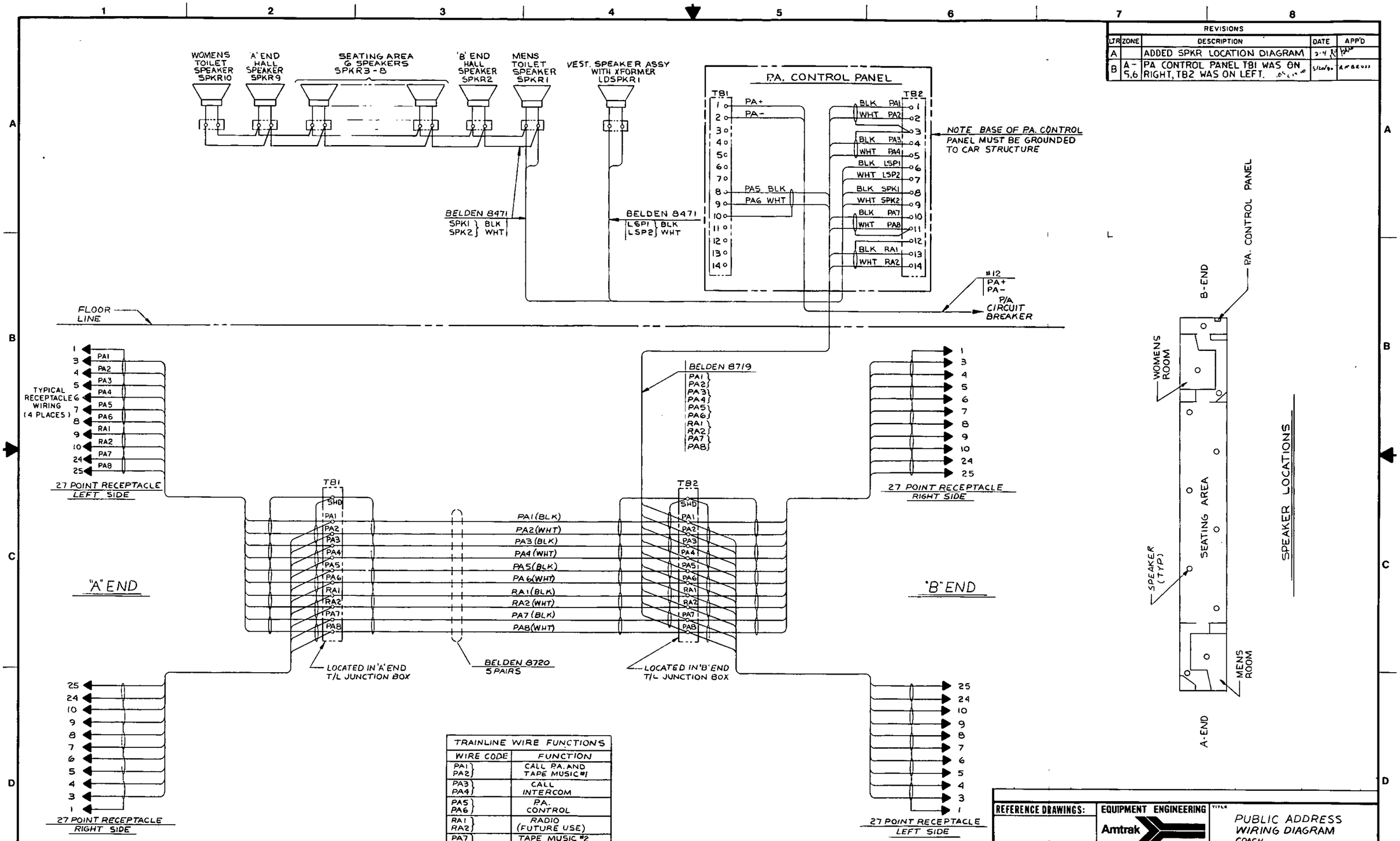

TRAINLINE WIRE FUNCTIONS	
WIRE CODE	FUNCTION
PA1 PA2	CALL P.A. AND TAPE MUSIC #1
PA3 PA4	CALL INTERCOM
PA5 PA6	P.A. CONTROL
RA1 RA2	RADIO (FUTURE USE)
PA7 PA8	TAPE MUSIC #2 (FUTURE USE)

REVISIONS				
LTR	ZONE	DESCRIPTION	DATE	APP'D
A		ADDED SPKR LOCATION DIAGRAM	2-4	
B	A-5,6	PA CONTROL PANEL TB1 WAS ON RIGHT, TB2 WAS ON LEFT.	5/20/80	

QTY-CAR	USED ON
	D-00-805(4600-50)

REFERENCE DRAWINGS:

EQUIPMENT ENGINEERING
Amtrak
National Railroad Passenger Corporation

TITLE: PUBLIC ADDRESS WIRING DIAGRAM COACH

DRAWN: Soesbee 2-28-79 | CHECKED | APPROVED | APPROVED

SCALE: NONE | DRAWING NO: D-04-737 | REV: B

SH 1 OF 1

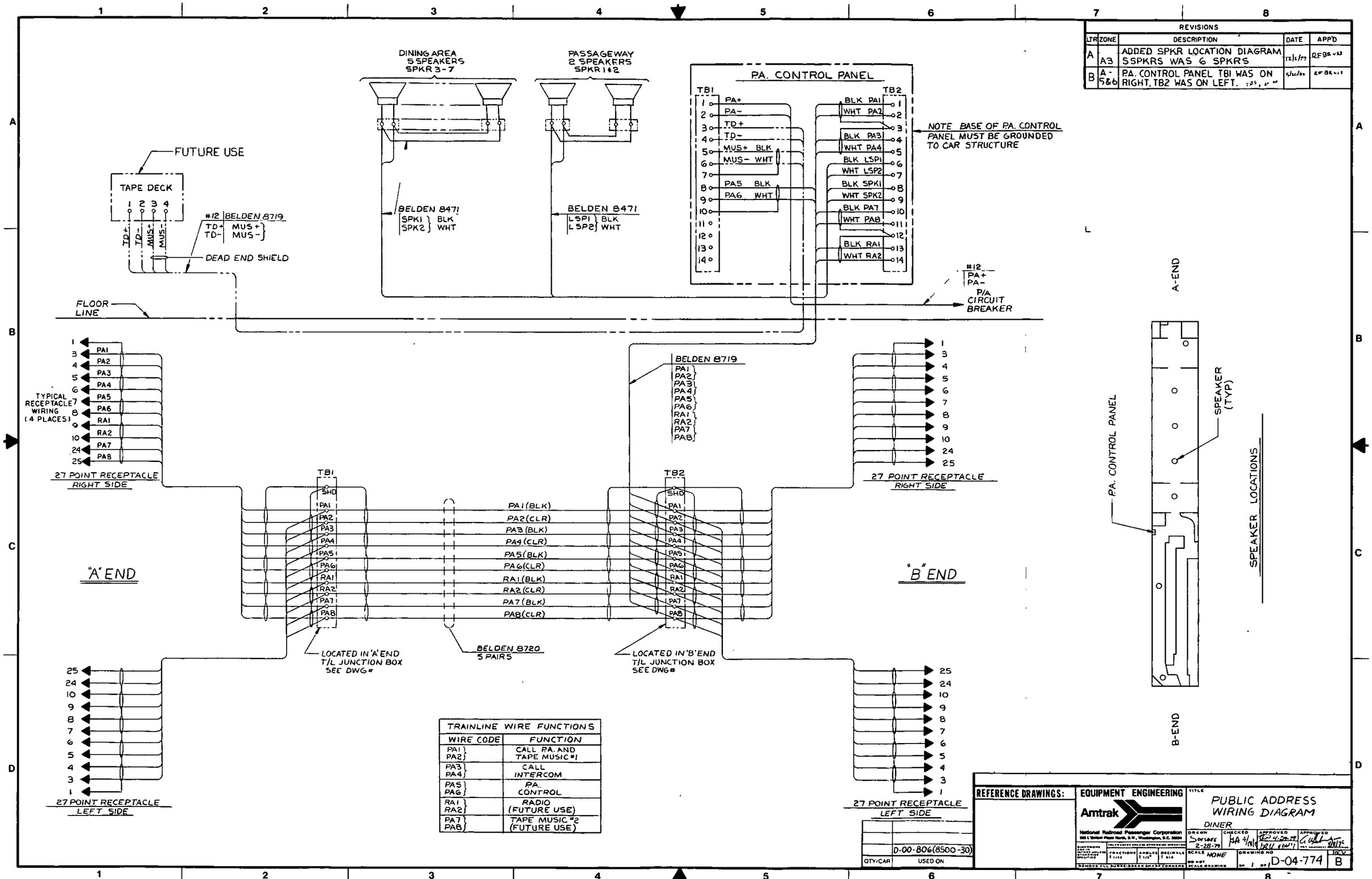

REVISIONS				
LTR	ZONE	DESCRIPTION	DATE	APP'D
A	A3	ADDED SPKR LOCATION DIAGRAM 5 SPKRS WAS 6 SPKRS	12/1/79	RFBR
B	A-5&6	P.A. CONTROL PANEL TB1 WAS ON RIGHT, TB2 WAS ON LEFT.	5/20/80	RFBR

TRAINLINE WIRE FUNCTIONS	
WIRE CODE	FUNCTION
PA1, PA2	CALL P.A. AND TAPE MUSIC #1
PA3, PA4	CALL INTERCOM
PA5, PA6	P.A. CONTROL
RA1, RA2	RADIO (FUTURE USE)
PA7, PA8	TAPE MUSIC #2 (FUTURE USE)

QTY/CAR	USED ON
	D-00-806(8500-30)

REFERENCE DRAWINGS:

EQUIPMENT ENGINEERING
Amtrak
National Railroad Passenger Corporation

TITLE: PUBLIC ADDRESS WIRING DIAGRAM
DINER

DRAWN: Soesbee 2-28-79 | CHECKED: JA 4/18/79 | APPROVED: 4-20-79 | APPROVED: 4/18/79

SCALE: NONE | DRAWING NO: D-04-774 | REV: B

SH 1 OF 1

REMOVE ALL BURRS-BREAK SHARP CORNERS

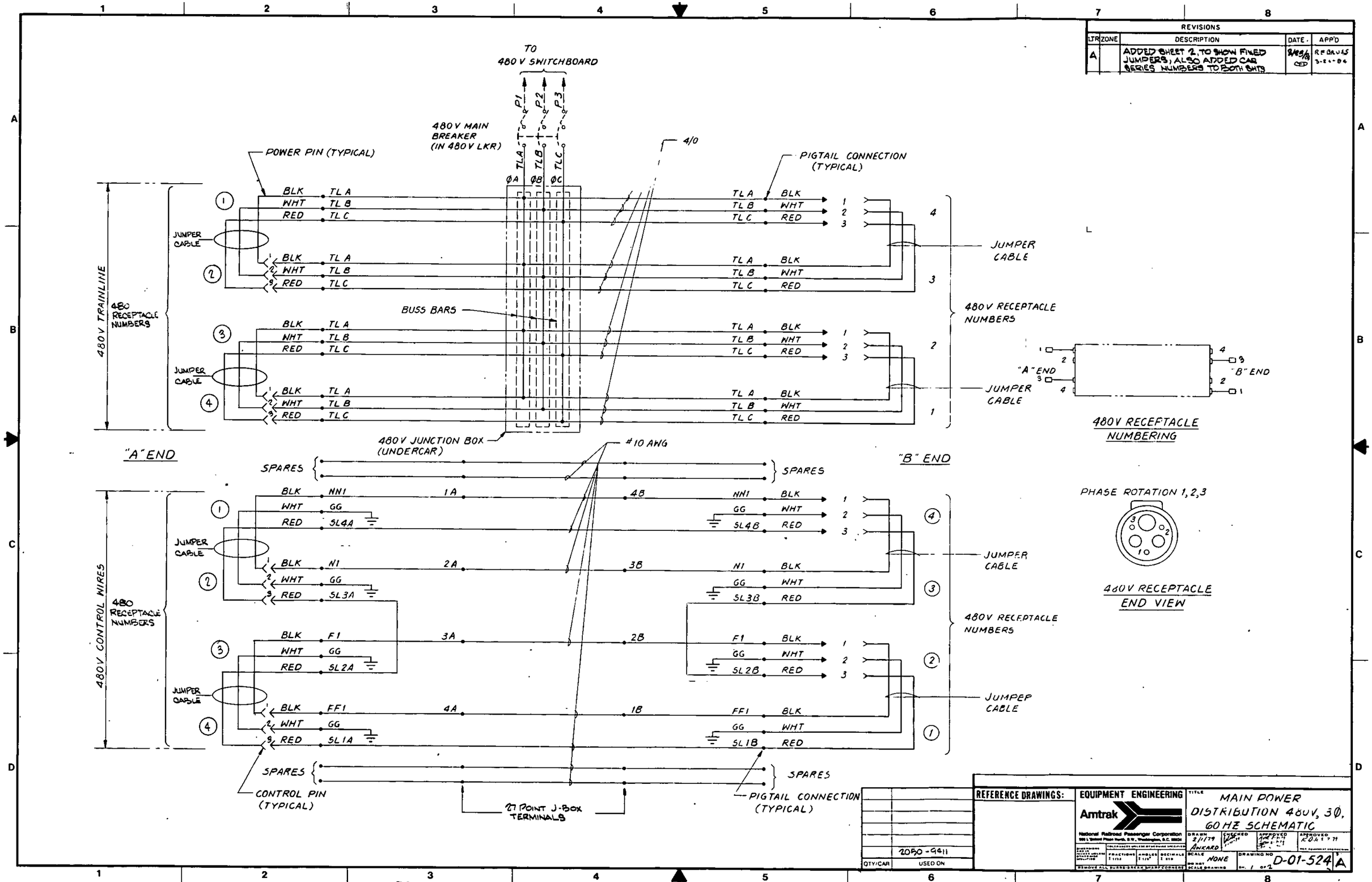
REVISIONS
LTR ZONE DESCRIPTION DATE APP'D
A ADDED SHEET 2, TO SHOW FIXED JUMPERS, ALSO ADDED CAR SERIES NUMBERS TO BOTH SHTS
TO 480 V SWITCHBOARD
P1 P2 P3
TLA TLB TLC
ØA ØB ØC
480 V MAIN BREAKER (IN 480 V LKR)
4/0
POWER PIN (TYPICAL)
PIGTAIL CONNECTION (TYPICAL)
480 V TRAINLINE
480 RECEPTACLE NUMBERS
JUMPER CABLE
BLK WHT RED
TL A TL B TL C
BUSS BARS
480 V RECEPTACLE NUMBERS
480 V JUNCTION BOX (UNDERCAR)
"A" END
"B" END
SPARES
#10 AWG
480 V CONTROL WIRES
NN1 GG SL4A
1A 4B
N1 GG SL3A
2A 3B
F1 GG SL2A
3A 2B
FF1 GG SL1A
4A 1B
SL4B SL3B SL2B SL1B
CONTROL PIN (TYPICAL)
27 POINT J-BOX TERMINALS
PIGTAIL CONNECTION (TYPICAL)
"A" END
"B" END
480V RECEPTACLE NUMBERING
PHASE ROTATION 1,2,3
480V RECEPTACLE END VIEW
2050-9411
QTY/CAR USED ON
REFERENCE DRAWINGS:
EQUIPMENT ENGINEERING
Amtrak
National Railroad Passenger Corporation
TITLE MAIN POWER DISTRIBUTION 480V, 3Ø, 60 HZ SCHEMATIC
DRAWN 2/1/79 AWKARD
SCALE NONE
DRAWING NO D-01-524 A
SH. 1 OF 2

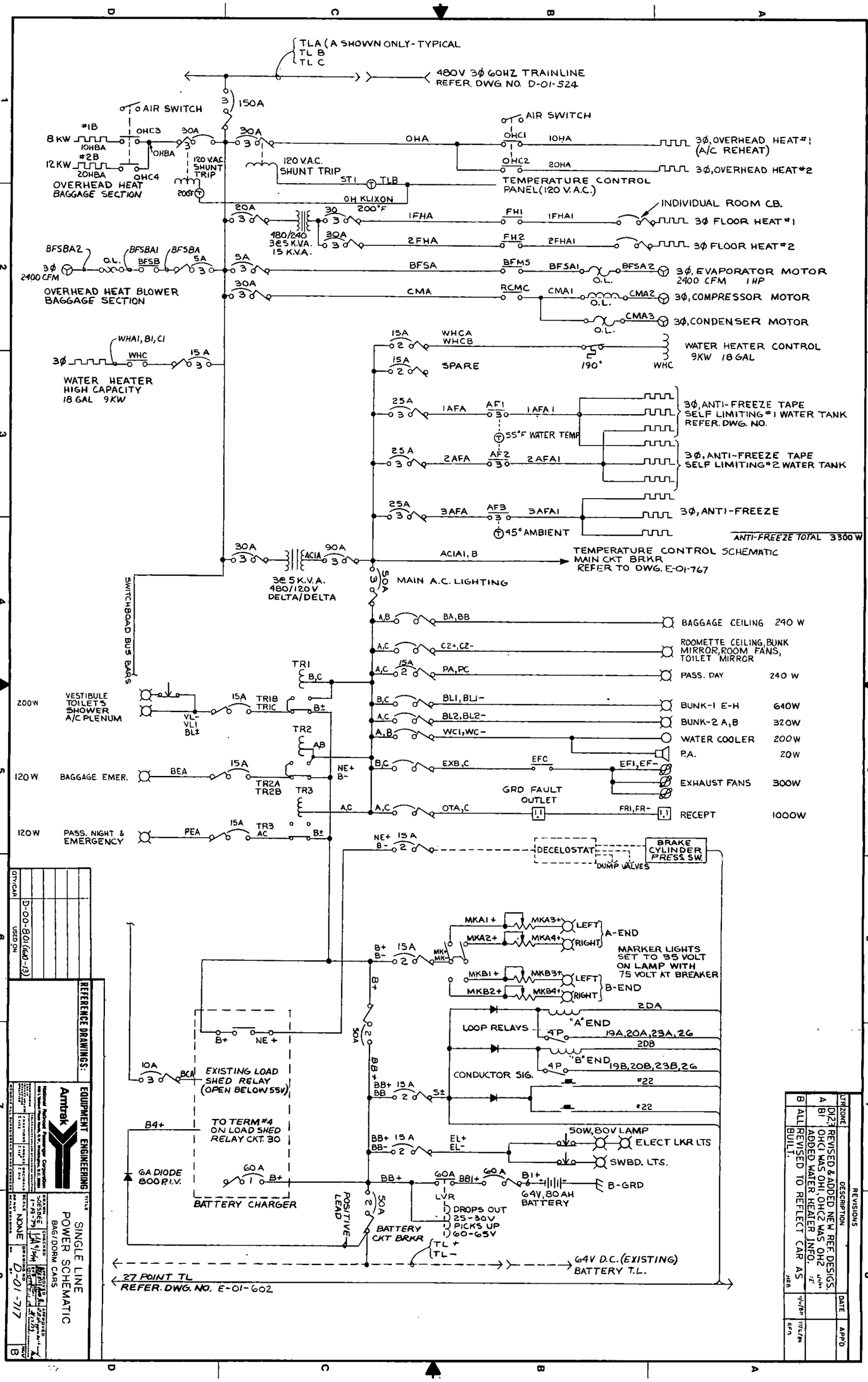

REVISIONS				
LTR	ZONE	DESCRIPTION	DATE	APP'D
A	B1	DI27 REVISED & ADDED NEW REF DESIGS. OHC1 WAS OH1, OHC2 WAS OH2 ADDED WATER HEATER INFO.	11/4/88	
B	ALL	REVISED TO REFLECT CAR AS BUILT.	11/4/88	

REFERENCE DRAWINGS:

EQUIPMENT ENGINEERING

Amtrak

National Railroad Passenger Corporation

TITLE: SINGLE LINE POWER SCHEMATIC
BAG/DORM CARS

DRAWN: 1-28-86
CHECKED: 1-28-86
APPROVED: 1-28-86
SCALE: NONE
DRAWING NO. D-01-717
REV. B

QTY/CAR
USED ON D-00-80 (640-13)

49

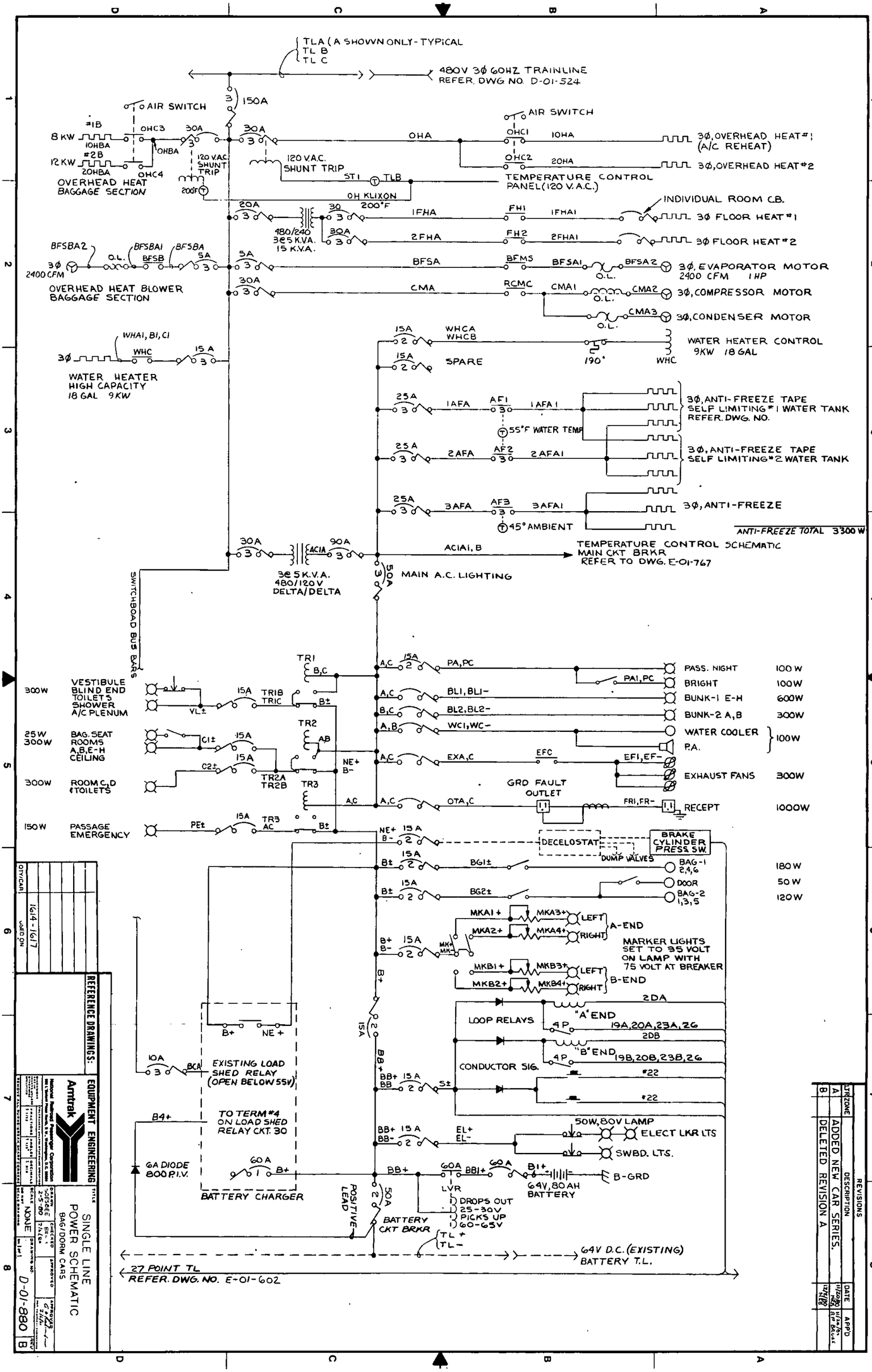
TLA (A SHOWN ONLY - TYPICAL
TL B
TL C
480V 3Ø 60HZ TRAINLINE
REFER. DWG NO. D-01-524
150A
AIR SWITCH
#1B
8 KW
10HBA
#2B
12 KW
20HBA
OHC3
OHBA
OHC4
OVERHEAD HEAT
BAGGAGE SECTION
30A
120 V.A.C.
SHUNT TRIP
200°F
OHA
OHC1
10HA
OHC2
20HA
3Ø, OVERHEAD HEAT #1
(A/C REHEAT)
3Ø, OVERHEAD HEAT #2
120 V.A.C.
SHUNT TRIP
ST1
TLB
TEMPERATURE CONTROL
PANEL (120 V.A.C.)
OH KLIXON
200°F
20A
480/240
3Ø 5 K.V.A.
15 K.V.A.
1FHA
FH1
1FHA1
INDIVIDUAL ROOM C.B.
3Ø FLOOR HEAT #1
2FHA
FH2
2FHA1
3Ø FLOOR HEAT #2
BFSBA2
BFSBA1
BFSBA
3Ø
2400 CFM
O.L.
BFSB
5A
OVERHEAD HEAT BLOWER
BAGGAGE SECTION
BFSA
BFMS
BFSA1
BFSA2
3Ø, EVAPORATOR MOTOR
2400 CFM 1HP
CMA
RCMC
CMA1
CMA2
3Ø, COMPRESSOR MOTOR
CMA3
3Ø, CONDENSER MOTOR
WHA1, B1, C1
WHC
15 A
WATER HEATER
HIGH CAPACITY
18 GAL 9KW
WHCA
WHCB
WATER HEATER CONTROL
9KW 18 GAL
190°
SPARE
25A
1AFA
AF1
1AFA1
3Ø, ANTI-FREEZE TAPE
SELF LIMITING #1 WATER TANK
REFER. DWG. NO.
55°F WATER TEMP
2AFA
AF2
2AFA1
3Ø, ANTI-FREEZE TAPE
SELF LIMITING #2 WATER TANK
3AFA
AF3
3AFA1
3Ø, ANTI-FREEZE
45° AMBIENT
ANTI-FREEZE TOTAL 3300 W
ACIA
90A
3Ø 5 K.V.A.
480/120 V
DELTA/DELTA
ACIA1, B
TEMPERATURE CONTROL SCHEMATIC
MAIN CKT BRKR
REFER TO DWG. E-01-767
50A
MAIN A.C. LIGHTING
SWITCHBOAD BUS BARS
TR1
PA, PC
PASS. NIGHT 100 W
PA1, PC
BRIGHT 100W
300W
VESTIBULE
BLIND END
TOILETS
SHOWER
A/C PLENUM
VL±
TR1B
TR1C
B±
BL1, BL1-
BUNK-1 E-H 600W
BL2, BL2-
BUNK-2 A, B 300W
TR2
25W
300W
BAG. SEAT
ROOMS
A, B, E-H
CEILING
C1±
AB
WC1, WC-
WATER COOLER
P.A.
100W
C2±
TR2A
TR2B
NE+
B-
EXA, C
EFC
EF1, EF-
EXHAUST FANS 300W
300W
ROOM C, D
& TOILETS
TR3
GRD FAULT
OUTLET
OTA, C
FR1, FR-
RECEPT 1000W
150W
PASSAGE
EMERGENCY
PE±
TR3
AC
DECELOSTAT
BRAKE
CYLINDER
PRESS. SW.
DUMP VALVES
BG1±
BAG-1
2,4,6
180 W
DOOR
50 W
BG2±
BAG-2
1,3,5
120 W
MKA1+
MKA3+
LEFT
MKA2+
MKA4+
RIGHT
A-END
MARKER LIGHTS
SET TO 35 VOLT
ON LAMP WITH
75 VOLT AT BREAKER
MKB1+
MKB3+
MKB2+
MKB4+
B-END
2DA
LOOP RELAYS
"A" END
4P
19A, 20A, 23A, 26
2DB
"B" END
19B, 20B, 23B, 26
CONDUCTOR SIG.
#22
#22
10A
BCA
EXISTING LOAD
SHED RELAY
(OPEN BELOW 55V)
B4+
TO TERM #4
ON LOAD SHED
RELAY CKT. 30
50W, 80V LAMP
EL+
EL-
ELECT LKR LTS
SWBD. LTS.
6A DIODE
800 P.I.V.
60A
BATTERY CHARGER
BB+
BB1+
B1+
64V, 80 AH
BATTERY
B-GRD
LVR
DROPS OUT
25-30V
PICKS UP
60-65V
POSITIVE
LEAD
BATTERY
CKT BRKR
TL+
TL-
64V D.C. (EXISTING)
BATTERY T.L.
27 POINT TL
REFER. DWG. NO. E-01-602
REFERENCE DRAWINGS:
1614-1617
QTY/CAR
USED ON
EQUIPMENT ENGINEERING
Amtrak
SINGLE LINE
POWER SCHEMATIC
BAG/DORM CARS
NONE
D-01-880
B
REVISIONS
LTR
ZONE
DESCRIPTION
DATE
APP'D
A
ADDED NEW CAR SERIES.
B
DELETED REVISION A

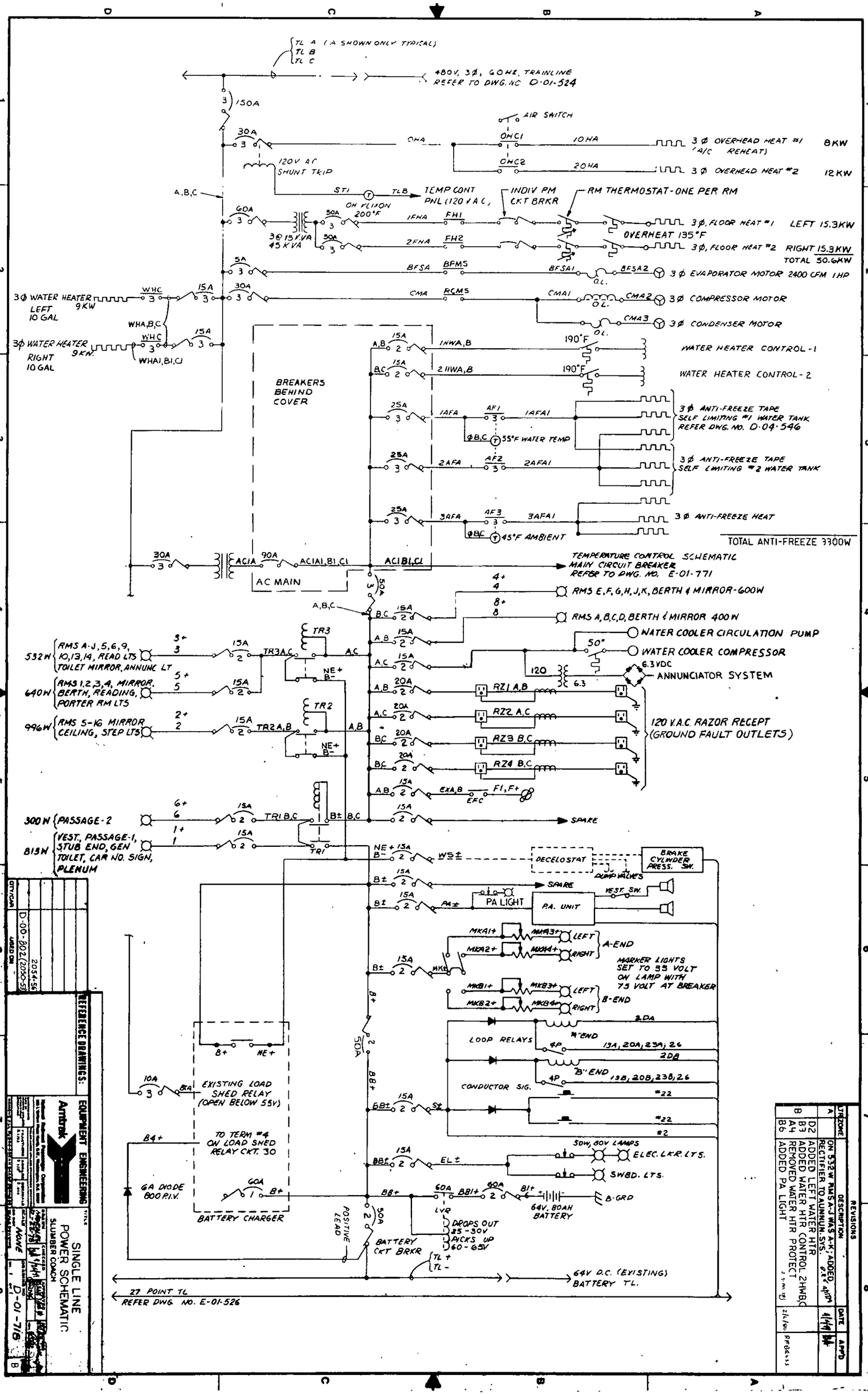

TL A (A SHOWN ONLY TYPICAL)
TL B
TL C
480V, 3Ø, 60HZ, TRAINLINE
REFER TO DWG. NO. D-01-524
150A
AIR SWITCH
OHC1
OHC2
10HA
20HA
3Ø OVERHEAD HEAT #1 (A/C REHEAT) 8KW
3Ø OVERHEAD HEAT #2 12KW
120V AC SHUNT TRIP
ST1
TLB
TEMP CONT PNL (120 V A C)
OH KLIXON 200°F
INDIV PM CKT BRKR
RM THERMOSTAT-ONE PER RM
3Ø, FLOOR HEAT #1 LEFT 15.3KW
OVERHEAT 135°F
3Ø, FLOOR HEAT #2 RIGHT 15.3KW
TOTAL 50.6KW
3Ø EVAPORATOR MOTOR 2400 CFM 1HP
3Ø WATER HEATER 9KW LEFT 10 GAL
3Ø WATER HEATER 9KW RIGHT 10 GAL
3Ø COMPRESSOR MOTOR
3Ø CONDENSER MOTOR
WATER HEATER CONTROL-1
WATER HEATER CONTROL-2
BREAKERS BEHIND COVER
3Ø ANTI-FREEZE TAPE SELF LIMITING #1 WATER TANK REFER DWG. NO. D-04-546
55°F WATER TEMP
3Ø ANTI-FREEZE TAPE SELF LIMITING #2 WATER TANK
3Ø ANTI-FREEZE HEAT
45°F AMBIENT
TOTAL ANTI-FREEZE 3300W
AC MAIN
TEMPERATURE CONTROL SCHEMATIC MAIN CIRCUIT BREAKER REFER TO DWG. NO. E-01-771
RMS E,F,G,H,J,K, BERTH & MIRROR-600W
RMS A,B,C,D, BERTH & MIRROR 400W
WATER COOLER CIRCULATION PUMP
WATER COOLER COMPRESSOR
6.3VDC
ANNUNCIATOR SYSTEM
532W RMS A-J, 5,6,9, 10,13,14, READ LTS TOILET MIRROR, ANNUNC LT
640W RMS 1,2,3,4, MIRROR, BERTH, READING, PORTER RM LTS
996W RMS 5-16 MIRROR CEILING, STEP LTS
120 V.A.C. RAZOR RECEPT (GROUND FAULT OUTLETS)
300W PASSAGE-2
813W VEST., PASSAGE-1, STUB END, GEN TOILET, CAR NO. SIGN, PLENUM
SPARE
DECELOSTAT
BRAKE CYLINDER PRESS. SW.
PUMP VALVES
VEST. SW.
PA LIGHT
P.A. UNIT
A-END
B-END
MARKER LIGHTS SET TO 35 VOLT ON LAMP WITH 75 VOLT AT BREAKER
LOOP RELAYS
CONDUCTOR SIG.
EXISTING LOAD SHED RELAY (OPEN BELOW 55V)
TO TERM #4 ON LOAD SHED RELAY CKT. 30
6A DIODE 800 P.I.V.
BATTERY CHARGER
50W, 80V LAMPS
ELEC. LKR. LTS.
SWBD. LTS.
64V, 80AH BATTERY
B-GRD
POSITIVE LEAD
BATTERY CKT BRKR
DROPS OUT 25-30V PICKS UP 60-65V
64V D.C. (EXISTING) BATTERY TL.
27 POINT TL REFER DWG. NO. E-01-526
REVISIONS
LTR ZONE DESCRIPTION DATE APP'D
A ON 532W RMS A-J WAS A-K; ADDED RECTIFIER TO ANNUN. SYS.
B D2 ADDED LEFT WATER HTR
B3 ADDED WATER HTR CONTROL 2HWB,C
A4 REMOVED WATER HTR PROTECT
B6 ADDED PA LIGHT
REFERENCE DRAWINGS:
EQUIPMENT ENGINEERING
Amtrak
SINGLE LINE POWER SCHEMATIC
SLUMBER COACH
D-01-718

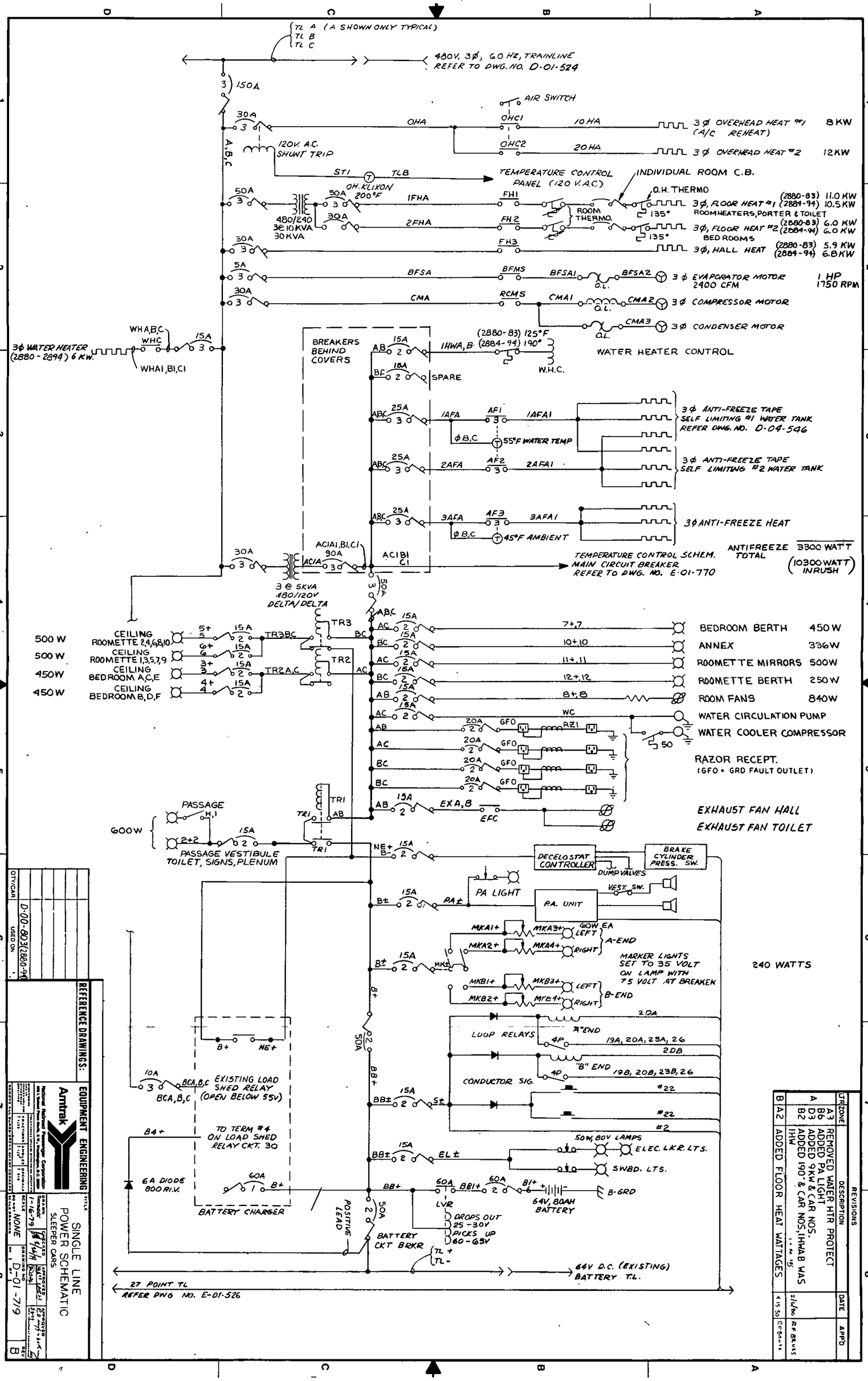

TL A (A SHOWN ONLY TYPICAL)
TL B
TL C
480V, 3Ø, 60 HZ, TRAINLINE
REFER TO DWG. NO. D-01-524
150A
AIR SWITCH
OHA
OHC1
10 HA
3Ø OVERHEAD HEAT #1 (A/C REHEAT)
8 KW
OHC2
20 HA
3Ø OVERHEAD HEAT #2
12 KW
120V. A.C. SHUNT TRIP
ST1
TLB
TEMPERATURE CONTROL PANEL (120 V.A.C.)
INDIVIDUAL ROOM C.B.
OH. KLIXON 200°F
1FHA
FH1
O.H. THERMO
3Ø, FLOOR HEAT #1 (2880-83) 11.0 KW (2884-94) 10.5 KW
ROOM THERMO.
135°
ROOMHEATERS, PORTER & TOILET
480/240 3Ø 10 KVA 30 KVA
2FHA
FH2
3Ø, FLOOR HEAT #2 (2880-83) 6.0 KW (2884-94) 6.0 KW
BED ROOMS
FH3
3Ø, HALL HEAT (2880-83) 5.9 KW (2884-94) 6.8 KW
BFSA
BFMS
BFSA1
BFSA2
O.L.
3Ø EVAPORATOR MOTOR 2400 CFM
1 HP 1750 RPM
CMA
RCMS
CMA1
CMA2
3Ø COMPRESSOR MOTOR
CMA3
3Ø CONDENSER MOTOR
3Ø WATER HEATER (2880-2894) 6 KW.
WHA,B,C
WHC
WHA1,B1,C1
BREAKERS BEHIND COVERS
1HWA,B
(2880-83) 125°F (2884-94) 190°
W.H.C.
WATER HEATER CONTROL
SPARE
1AFA
AF1
1AFA1
3Ø ANTI-FREEZE TAPE SELF LIMITING #1 WATER TANK REFER DWG. NO. D-04-546
55°F WATER TEMP
2AFA
AF2
2AFA1
3Ø ANTI-FREEZE TAPE SELF LIMITING #2 WATER TANK
3AFA
AF3
3AFA1
3Ø ANTI-FREEZE HEAT
45°F AMBIENT
ANTIFREEZE TOTAL 3300 WATT (10300 WATT INRUSH)
AC1A1,B1,C1
AC1A
AC1B1 C1
TEMPERATURE CONTROL SCHEM. MAIN CIRCUIT BREAKER REFER TO DWG. NO. E-01-770
3 @ 5KVA 480/120V DELTA/DELTA
500 W CEILING ROOMETTE 2,4,6,8,10
500 W CEILING ROOMETTE 1,3,5,7,9
450W CEILING BEDROOM A,C,E
450 W CEILING BEDROOM B,D,F
TR3
TR2
TR3B,C
TR2A,C
BEDROOM BERTH 450 W
ANNEX 336W
ROOMETTE MIRRORS 500W
ROOMETTE BERTH 250 W
ROOM FANS 840W
WATER CIRCULATION PUMP
WATER COOLER COMPRESSOR
RAZOR RECEPT. (GFO = GRD FAULT OUTLET)
GFO
RZ1
EXHAUST FAN HALL
EXHAUST FAN TOILET
EXA,B
EFC
PASSAGE
600W
PASSAGE VESTIBULE TOILET, SIGNS, PLENUM
TR1
DECELOSTAT CONTROLLER
BRAKE CYLINDER PRESS. SW.
DUMP VALVES
PA LIGHT
P.A. UNIT
VEST. SW.
MKA1+
MKA3+
MKA2+
MKA4+
60W EA
LEFT
RIGHT
A-END
MARKER LIGHTS SET TO 35 VOLT ON LAMP WITH 75 VOLT AT BREAKER
240 WATTS
MKB1+
MKB3+
MKB2+
MKB4+
B-END
LOOP RELAYS
"A" END
19A, 20A, 23A, 26
"B" END
19B, 20B, 23B, 26
CONDUCTOR SIG.
EXISTING LOAD SHED RELAY (OPEN BELOW 55V)
TO TERM #4 ON LOAD SHED RELAY CKT. 30
6A DIODE 800 RI.V.
BATTERY CHARGER
50W, 80V LAMPS
ELEC. LKR. LTS.
SWBD. LTS.
64V, 80AH BATTERY
B-GRD
POSITIVE LEAD
BATTERY CKT BRKR
DROPS OUT 25-30V
PICKS UP 60-65V
64V D.C. (EXISTING) BATTERY T.L.
27 POINT TL
REFER DWG NO. E-01-526
REFERENCE DRAWINGS:
EQUIPMENT ENGINEERING
Amtrak
SINGLE LINE POWER SCHEMATIC
SLEEPER CARS
D-00-803 (2880-94)
OTY/CAR
USED ON
REVISIONS
LTR ZONE DESCRIPTION DATE APP'D
A3 REMOVED WATER HTR PROTECT
B6 ADDED PA LIGHT
D3 ADDED 9KW & CAR NOS.
B2 ADDED 190° & CAR NOS, 1HWA B WAS 1HW
B A2 ADDED FLOOR HEAT WATTAGES

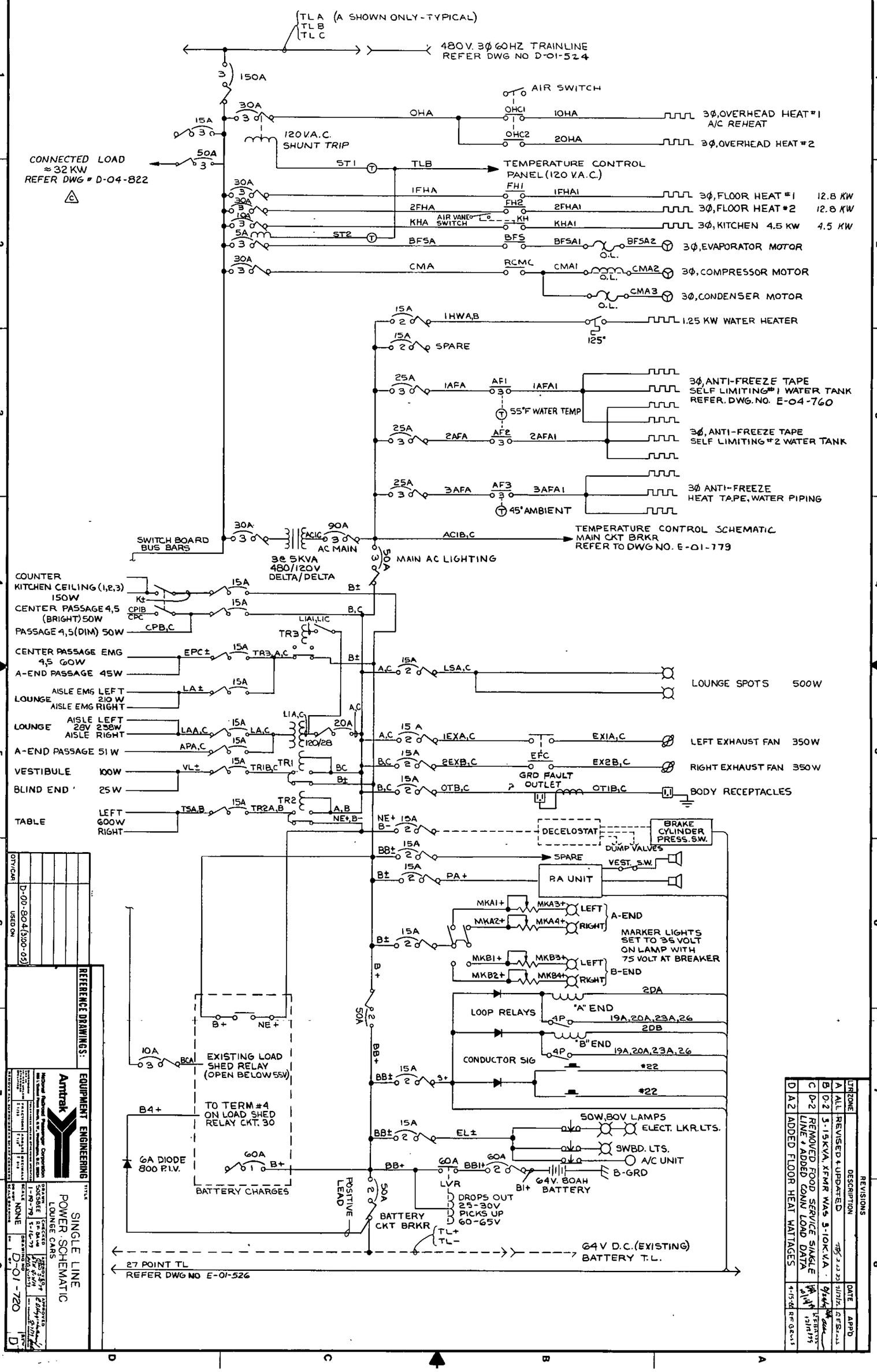

LTR	ZONE	DESCRIPTION	DATE	APP'D
A	ALL	REVISED & UPDATED	7/31/75	
B	D-2	3-15 KVA, XFMR WAS 5-10K.V.A.	9/4/75	
C	D-2	REMOVED FOOD SERVICE SINGLE LINE & ADDED CONN LOAD DATA	12/31/75	
D	A-2	ADDED FLOOR HEAT WATTAGES	4-15-76	

QTY/CAR

USED ON D-00-804(300-05)

REFERENCE DRAWINGS:

EQUIPMENT ENGINEERING

Amtrak

National Railroad Passenger Corporation
400 N. Capitol Street, N.W. Washington, D.C. 20001

DRAWN: SOESSEE 7-79
CHECKED: 8-1-79
APPROVED: 8/15/79

SCALE: NONE

TITLE: SINGLE LINE POWER SCHEMATIC LOUNGE CARS

DRAWING NO. D-01-720

REV. D

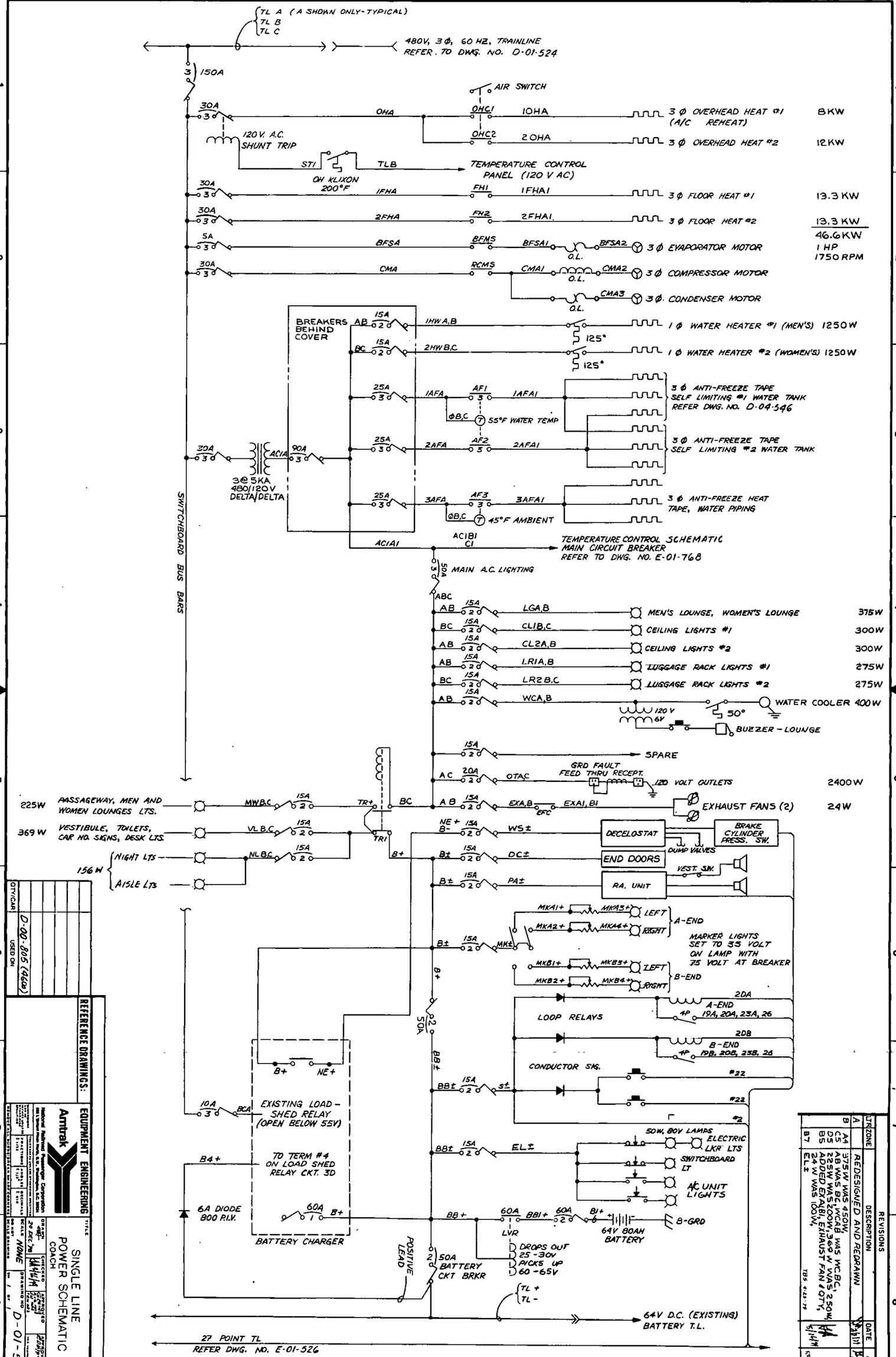
TL A (A SHOWN ONLY-TYPICAL)
TL B
TL C
480V, 3Φ, 60 HZ, TRAINLINE
REFER. TO DWG. NO. D-01-524
150A
AIR SWITCH
OHA
OHC1
10HA
3Φ OVERHEAD HEAT #1 (A/C REHEAT)
8KW
OHC2
20HA
3Φ OVERHEAD HEAT #2
12KW
120V. A.C. SHUNT TRIP
ST1
TLB
TEMPERATURE CONTROL PANEL (120 V AC)
OH KLIXON 200°F
1FHA
FH1
1FHA1
3Φ FLOOR HEAT #1
13.3 KW
2FHA
FH2
2FHA1
3Φ FLOOR HEAT #2
13.3 KW
46.6KW
BFSA
BFMS
BFSA1
BFSA2
O.L.
3Φ EVAPORATOR MOTOR
1 HP
1750 RPM
CMA
RCMS
CMA1
CMA2
3Φ COMPRESSOR MOTOR
CMA3
3Φ CONDENSER MOTOR
BREAKERS BEHIND COVER
1HW A,B
1Φ WATER HEATER #1 (MEN'S) 1250W
125°
2HW B,C
1Φ WATER HEATER #2 (WOMEN'S) 1250W
1AFA
AF1
1AFA1
3Φ ANTI-FREEZE TAPE SELF LIMITING #1 WATER TANK REFER DWG. NO. D-04-546
ΦB,C
55°F WATER TEMP
2AFA
AF2
2AFA1
3Φ ANTI-FREEZE TAPE SELF LIMITING #2 WATER TANK
3@5KA 480/120V DELTA/DELTA
3AFA
AF3
3AFA1
3Φ ANTI-FREEZE HEAT TAPE, WATER PIPING
45°F AMBIENT
ACIA1
ACIB1 C1
TEMPERATURE CONTROL SCHEMATIC MAIN CIRCUIT BREAKER REFER TO DWG. NO. E-01-768
SWITCHBOARD BUS BARS
MAIN A.C. LIGHTING
LGA,B
MEN'S LOUNGE, WOMEN'S LOUNGE
375W
CL1B,C
CEILING LIGHTS #1
300W
CL2A,B
CEILING LIGHTS #2
300W
LR1A,B
LUGGAGE RACK LIGHTS #1
275W
LR2B,C
LUGGAGE RACK LIGHTS #2
275W
WCA,B
WATER COOLER 400W
120 V
6V
50°
BUZZER - LOUNGE
SPARE
GRD FAULT FEED THRU RECEPT.
OTAC
120 VOLT OUTLETS
2400W
225W
PASSAGEWAY, MEN AND WOMEN LOUNGES LTS.
MWB,C
TR+
BC
EXA,B
EFC
EXA1, B1
EXHAUST FANS (2)
24W
369 W
VESTIBULE, TOILETS, CAR NO. SIGNS, DESK LTS.
VLB,C
TR1
NE+
B-
WS±
DECELOSTAT
BRAKE CYLINDER PRESS. SW.
DUMP VALVES
156 W
NIGHT LTS
NLB,C
B+
DC±
END DOORS
VEST. SW.
AISLE LTS
PA±
RA. UNIT
MKA1+
MKA3+
LEFT
MKA2+
MKA4+
RIGHT
A-END
MARKER LIGHTS SET TO 35 VOLT ON LAMP WITH 75 VOLT AT BREAKER
MK±
MKB1+
MKB3+
MKB2+
MKB4+
B-END
2DA
A-END
19A, 20A, 23A, 26
LOOP RELAYS
2DB
B-END
19B, 20B, 23B, 26
CONDUCTOR SIG.
#22
#2
50A
BB±
S±
EXISTING LOAD-SHED RELAY (OPEN BELOW 55V)
TO TERM #4 ON LOAD SHED RELAY CKT. 3D
B4+
50W, 80V LAMPS
ELECTRIC LKR LTS
EL±
SWITCHBOARD LT
A/C UNIT LIGHTS
6A DIODE 800 P.I.V.
BB+
BB1+
B1+
64V 80AH BATTERY
B-GRD
LVR
DROPS OUT 25-30V
PICKS UP 60-65V
BATTERY CHARGER
POSITIVE LEAD
50A BATTERY CKT BRKR
TL +
TL -
64V D.C. (EXISTING) BATTERY T.L.
27 POINT TL
REFER DWG. NO. E-01-526
REVISIONS
LTR ZONE DESCRIPTION DATE APP'D
A REDESIGNED AND REDRAWN
B A4 375W WAS 450W, C5 AB WAS BC, WCAB WAS WCBC, D5 225W WAS 200W, 369 W WAS 250W, B5 ADDED EXA1B1, EXHAUST FAN & QTY, 24 W WAS 100W, B7 EL±
REFERENCE DRAWINGS:
EQUIPMENT ENGINEERING
Amtrak
National Railroad Passenger Corporation
SINGLE LINE POWER SCHEMATIC
COACH
D-01-521
B
D-00-805 (4600)
QTY/CAR
USED ON

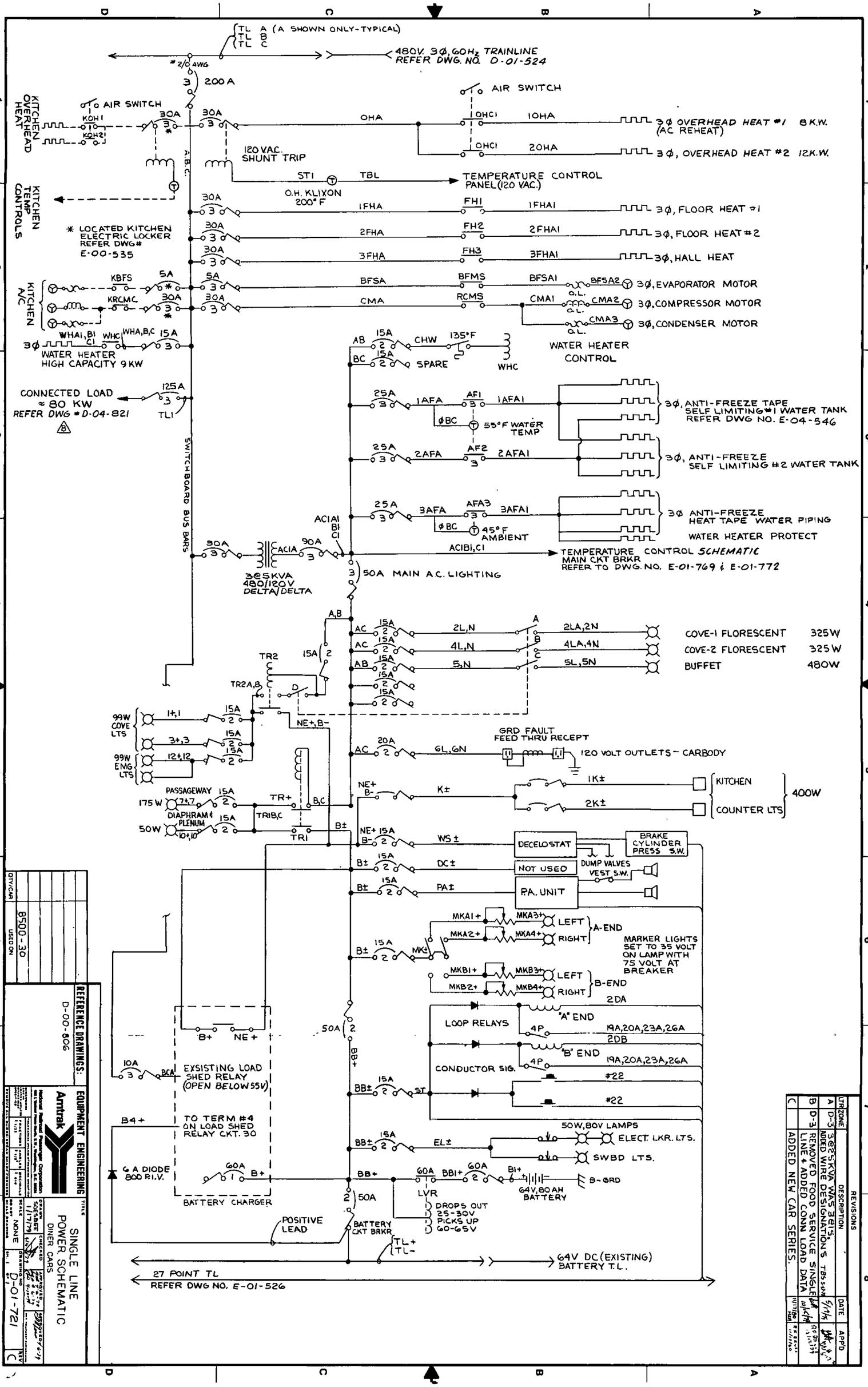

TL A (A SHOWN ONLY-TYPICAL)
TL B
TL C
480V. 3Ø, 60Hz TRAINLINE
REFER DWG. NO. D-01-524
#2/0 AWG
200 A
AIR SWITCH
KITCHEN OVERHEAD HEAT
KOH1
KOH2
30A
OHA
OHC1
10HA
20HA
3Ø OVERHEAD HEAT #1 8K.W. (AC REHEAT)
3Ø, OVERHEAD HEAT #2 12K.W.
120 VAC. SHUNT TRIP
A.B.C.
ST1
TBL
TEMPERATURE CONTROL PANEL (120 VAC.)
O.H. KLIXON 200° F
KITCHEN TEMP CONTROLS
1FHA
FH1
1FHA1
3Ø, FLOOR HEAT #1
2FHA
FH2
2FHA1
3Ø, FLOOR HEAT #2
3FHA
FH3
3FHA1
3Ø, HALL HEAT
* LOCATED KITCHEN ELECTRIC LOCKER REFER DWG# E-00-535
KITCHEN A/C
KBFS
5A
KRCMC
BFSA
BFMS
BFSA1
BFSA2
3Ø, EVAPORATOR MOTOR
CMA
RCMS
CMA1
CMA2
3Ø, COMPRESSOR MOTOR
CMA3
3Ø, CONDENSER MOTOR
O.L.
WHA1, B1 C1
WHC
WHA, B, C
15A
3Ø
WATER HEATER HIGH CAPACITY 9 KW
AB
BC
CHW
135°F
SPARE
WHC
WATER HEATER CONTROL
CONNECTED LOAD ≈ 80 KW
REFER DWG # D-04-821
125A
TL1
25A
1AFA
AF1
1AFA1
ØBC
55°F WATER TEMP
3Ø, ANTI-FREEZE TAPE SELF LIMITING #1 WATER TANK REFER DWG NO. E-04-546
2AFA
AF2
2AFA1
3Ø, ANTI-FREEZE SELF LIMITING #2 WATER TANK
3AFA
AFA3
3AFA1
45°F AMBIENT
3Ø ANTI-FREEZE HEAT TAPE WATER PIPING
WATER HEATER PROTECT
SWITCHBOARD BUS BARS
AC1A1 B1 C1
AC1A
90A
AC1B1, C1
TEMPERATURE CONTROL SCHEMATIC MAIN CKT BRKR REFER TO DWG. NO. E-01-769 & E-01-772
3@5KVA 480/120V DELTA/DELTA
50A MAIN A.C. LIGHTING
A,B
AC
2L,N
2LA,2N
COVE-1 FLORESCENT 325W
4L,N
4LA,4N
COVE-2 FLORESCENT 325W
AB
5,N
5L,5N
BUFFET 480W
TR2
TR2A,B
D
99W COVE LTS
1+,1
3+,3
99W EMG LTS
12+,12
NE+, B-
GRD FAULT FEED THRU RECEPT
20A
6L,6N
120 VOLT OUTLETS - CARBODY
PASSAGEWAY
175 W
7+,7
DIAPHRAM & PLENUM
50W
10+,10
TR+
TR1B,C
TR1
B,C
B±
NE+ B-
K±
1K±
2K±
KITCHEN
COUNTER LTS
400W
WS±
DECELOSTAT
BRAKE CYLINDER PRESS S.W.
DC±
NOT USED
DUMP VALVES VEST S.W.
PA±
P.A. UNIT
MKA1+
MKA3+
MKA2+
MKA4+
LEFT
RIGHT
A-END
MARKER LIGHTS SET TO 35 VOLT ON LAMP WITH 75 VOLT AT BREAKER
MK±
MKB1+
MKB3+
MKB2+
MKB4+
B-END
2DA
LOOP RELAYS
"A" END
4P
19A,20A,23A,26A
2DB
"B" END
CONDUCTOR SIG.
#22
ST
50A
BB+
B+
NE+
10A
BCA
EXSISTING LOAD SHED RELAY (OPEN BELOW 55V)
B4+
TO TERM #4 ON LOAD SHED RELAY CKT. 30
6 A DIODE 800 P.I.V.
60A
BATTERY CHARGER
BB±
EL±
50W, 80V LAMPS
ELECT. LKR. LTS.
SWBD LTS.
BB1+
B1+
64V, 80 AH BATTERY
B-GRD
LVR
DROPS OUT 25-30V PICKS UP 60-65V
POSITIVE LEAD
BATTERY CKT BRKR
TL+
TL-
64V DC (EXISTING) BATTERY T.L.
27 POINT TL
REFER DWG NO. E-01-526
REFERENCE DRAWINGS:
D-00-806
QTY/CAR
8500-30
USED ON
EQUIPMENT ENGINEERING
Amtrak
SINGLE LINE POWER SCHEMATIC
DINER CARS
D-01-721
REVISIONS
LTR ZONE DESCRIPTION DATE APP'D
A D-3 3@25KVA WAS 3@15, ADDED WIRE DESIGNATIONS
B D-3 REMOVED FOOD SERVICE SINGLE LINE & ADDED CONN LOAD DATA
C ADDED NEW CAR SERIES.

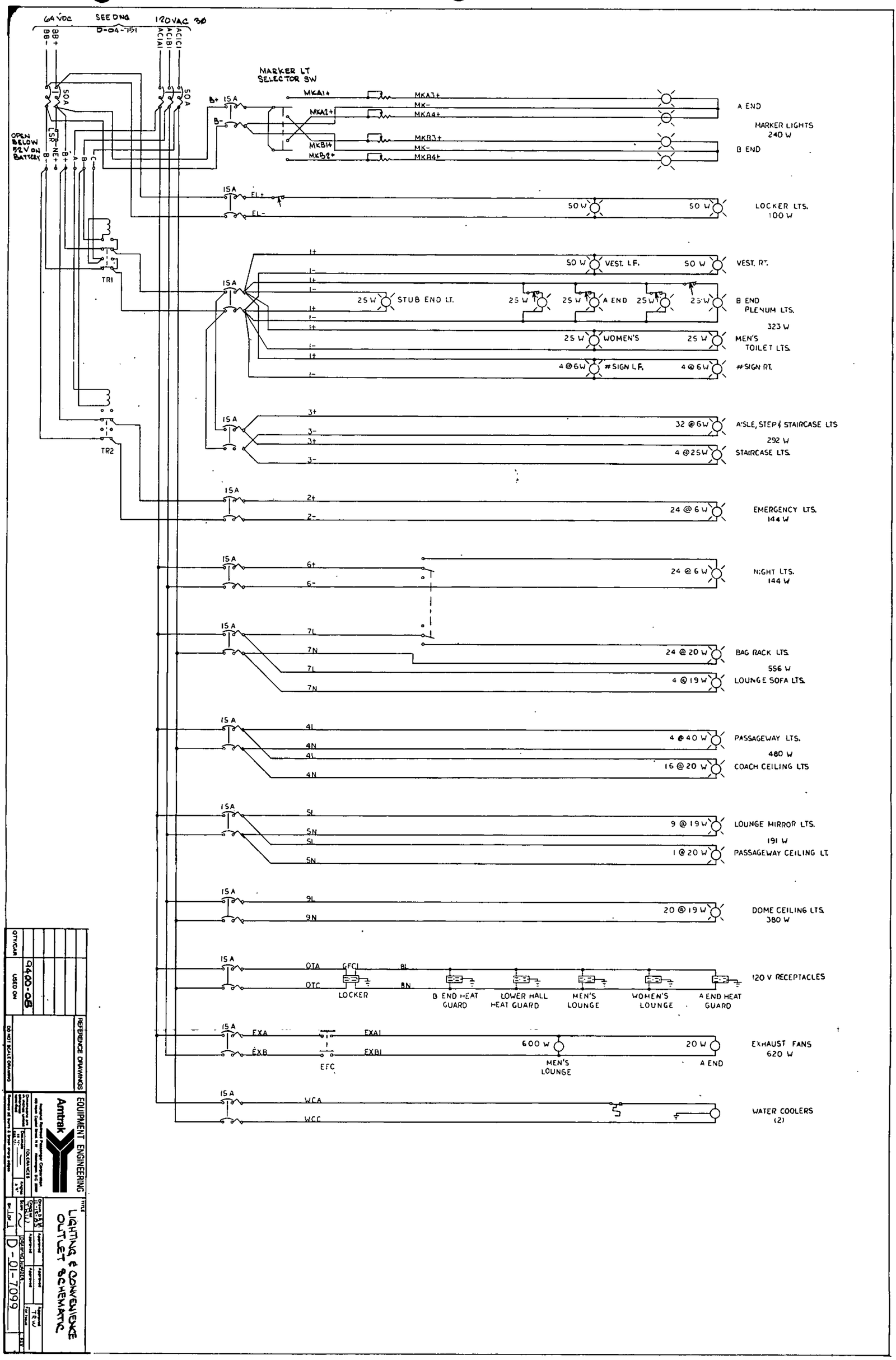
64 VDC
SEE DWG D-04-751
120VAC 3Ø
BB-
BB+
ACIA1
ACIB1
ACIC1
50A
OPEN BELOW 52V ON BATTERY
LSR
NE+
B-
B+
A
B
C
MARKER LT SELECTOR SW
MKA1+
MKA2+
MKB1+
MKB2+
MKA3+
MK-
MKA4+
MKB3+
MK-
MKB4+
A END
MARKER LIGHTS 240 W
B END
15A
FL+
FL-
50 W
LOCKER LTS. 100 W
TR1
1+
1-
50 W VEST. LF.
VEST. RT.
25 W STUB END LT.
25 W A END
B END PLENUM LTS.
323 W
25 W WOMEN'S
MEN'S TOILET LTS.
4 @ 6W #SIGN LF.
#SIGN RT.
TR2
3+
3-
32 @ 6W
AISLE, STEP & STAIRCASE LTS
292 W
4 @ 25W
STAIRCASE LTS.
2+
2-
24 @ 6 W
EMERGENCY LTS. 144 W
6+
6-
24 @ 6 W
NIGHT LTS. 144 W
7L
7N
24 @ 20 W
BAG RACK LTS.
556 W
4 @ 19 W
LOUNGE SOFA LTS.
4L
4N
4 @ 40 W
PASSAGEWAY LTS.
480 W
16 @ 20 W
COACH CEILING LTS
5L
5N
9 @ 19 W
LOUNGE MIRROR LTS.
191 W
1 @ 20 W
PASSAGEWAY CEILING LT.
9L
9N
20 @ 19 W
DOME CEILING LTS. 380 W
OTA
OTC
GFCI
8L
8N
LOCKER
B END HEAT GUARD
LOWER HALL HEAT GUARD
MEN'S LOUNGE
WOMEN'S LOUNGE
A END HEAT GUARD
120 V RECEPTACLES
EXA
EXB
EXA1
EXB1
EFC
600 W
MEN'S LOUNGE
20 W
A END
EXHAUST FANS 620 W
WCA
WCC
WATER COOLERS (2)
QTY/CAR
USED ON
9400-08
REFERENCE DRAWINGS
DO NOT SCALE DRAWING
EQUIPMENT ENGINEERING
Amtrak
TITLE
LIGHTING & CONVENIENCE OUTLET SCHEMATIC
D-01-7099

LTR	ZONE	REVISIONS DESCRIPTION	DATE	APPR'D

240 W — MARKER LT — 6 W EA. — A END — B END — MKA3+ — MK− — MKA4+ — MKB3+ — MK− — MKB4+

100 W — ELEC. LOCKER LT. — 50 W — DOOR SW. — EL+ — EL−

225 W — CLOSET STUB PASSAGE PLENUM — PWB3 — HATCH SW. — PWB2 — 25W — PLENUM — 50W — PASSAGE — 25W — STUB — 25W — CLOSET — DOOR SW. — PWB1 — PWB — PWC

20 W — CENTER LT — 1–20

168 W / 120 W — BTCC-C3 / BTC4 — EMERGENCY CEILING LTS. — EM+ — EM− — ALL 6 W EA.

450 W — BUFFET SPOT LTS — ALL SPOTS 50 W EA. — SPB1 — SPB — SPC — SW. IN GALLEY

280 W — LOUNGE CEILING BTC4 ONLY — 2–40 — 2–20 — LCB — LCC

560 W — LOUNGE CEILING BTCC-03 — 1–40 — 1–30 — 1–40 — LCB — LCC

280 W — BUFFET CEILING LEFT — 2–20 — BFLA — BFLB — BF-A SW. IN GALLEY

280 W — BUFFET CEILING RIGHT — 2–20 — BFRA1 — SW. IN GALLEY — BFRA — BFRB

300 W — COVE LIGHT LEFT — 1–40 — 1–20 — CLLA — CLLB

256 W — COVE LIGHT RIGHT — 1–40 — CLLB — CLRB

640 W — EXHAUST FANS — 20 W — 600 W — EFC — EXB — EXC — EXB1 — EXC1

BODY RECPT. — LOCKER RECPT. — OTB — OTC — OTB1 — OTC1

SEE DWG D-04-151 — 120 VAC 3Ø — 64 VDC — ACIC1 — ACIB1 — ACIA1 — AC MAIN LIGHTING 50 A — 50A DC MAIN — BB+ — BB− — OPEN BELOW 21 V ON BATTERY — LSH — NE

MARKER LT. SELECTOR SW. — MKA1+ — MKA2+ — MKB1+ — MKB2+ — 15A — B+ — B−

TRI — TRIB — TRIC — TR2 — TR2A — TR2B

		REFERENCE DRAWINGS	EQUIPMENT ENGINEERING — Amtrak — National Railroad Passenger Corporation	TITLE: LIGHTING & CONVENIENCE OUTLET SCHEMATIC BUFFET CAR	
			Drawn: Ryh 10/20	Approved	Approved	Approved
			Checked	Approved	Approved TRW for Items
	8700-04		TOLERANCES: Decimals .xx ±.01, .xxx ±.005; Angles ±1°; Remove all burrs & break sharp edges	Scale	DRAWING NUMBER: D-01-7100	REV
QTY/CAR	USED ON	DO NOT SCALE DRAWING		SH 1 OF 1		

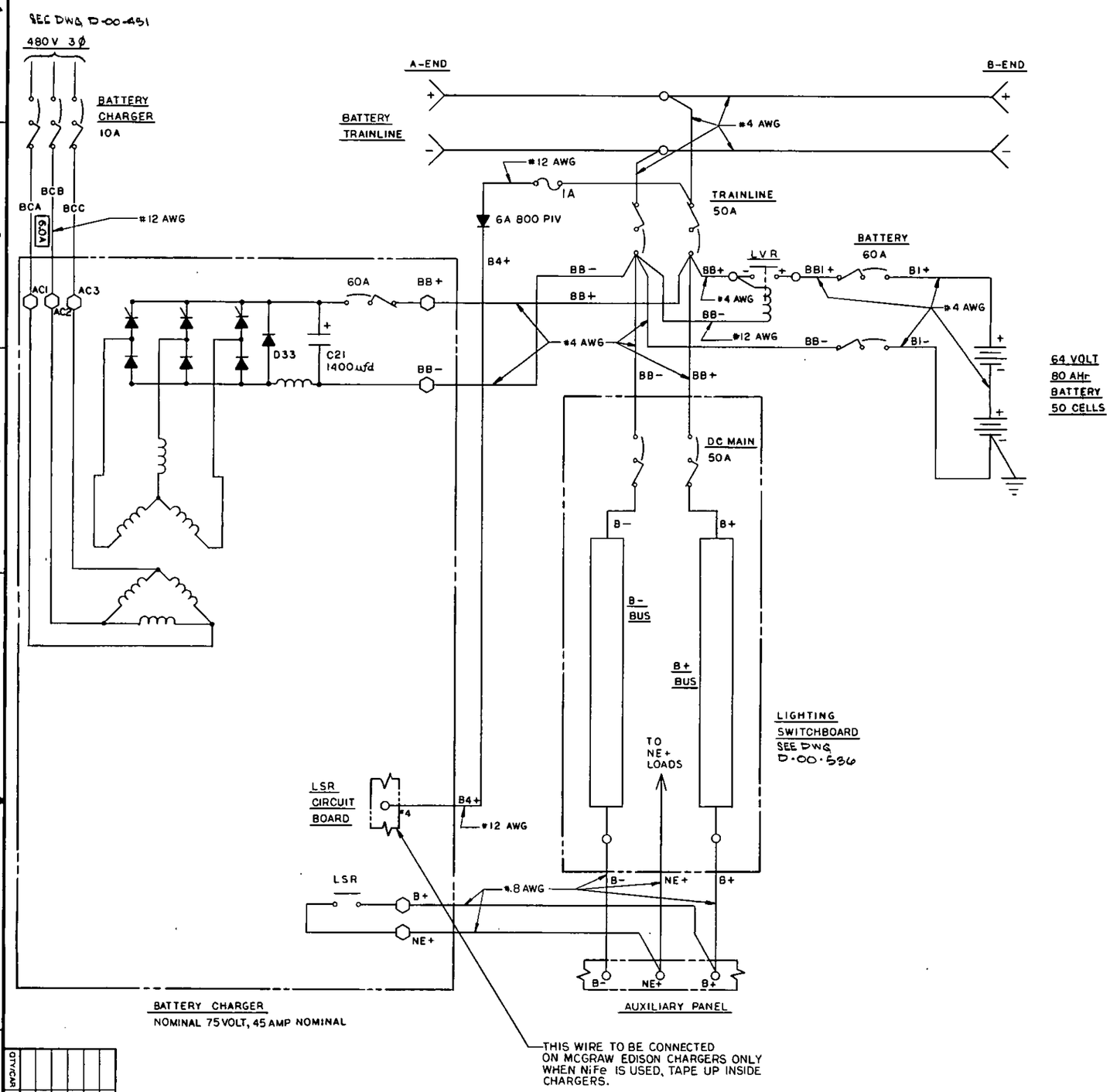

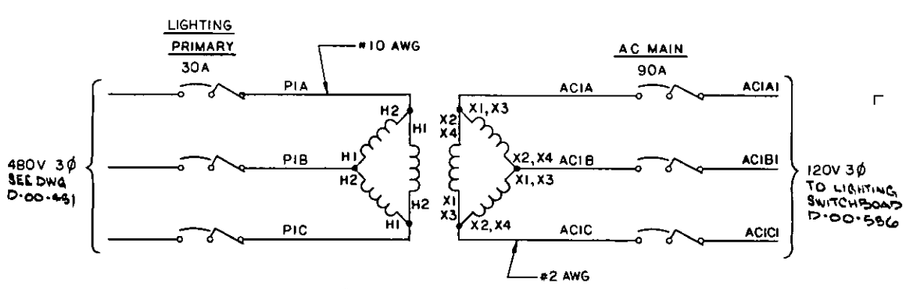

△ LIGHTING TRANS. 480/120 5KVA EA

△ NOT APPLICABLE TO BAGGAGE CARS

QTY/CAR	USED ON
	8100-9411
	1150-2896

REFERENCE DRAWINGS:

EQUIPMENT ENGINEERING

Amtrak

National Railroad Passenger Corporation

TITLE: AC & DC POWER SUPPLY WIRING DIAGRAM 120 VOLT AC & 64 VOLT DC

DRAWN: [illegible] CHECKED: [illegible] APPROVED: [illegible] APPROVED: [illegible]

SCALE: NONE

DRAWING NO: D-04-751 C

REVISIONS

LTR	ZONE	DESCRIPTION	DATE	APP'D
A	C2 B6	ADDED FUSE IN B4+ CIRCUIT. ADDED NOTE FOR B4+ ON NiFe CHARGER.	5/7/80 MRB	5/8/80 [illegible]
B	C8	ADDED NOTE.	10/31/80 MRB	[illegible]
C		ADDED REF NOTES & CAR NUMBERS	3-24-84	[illegible]

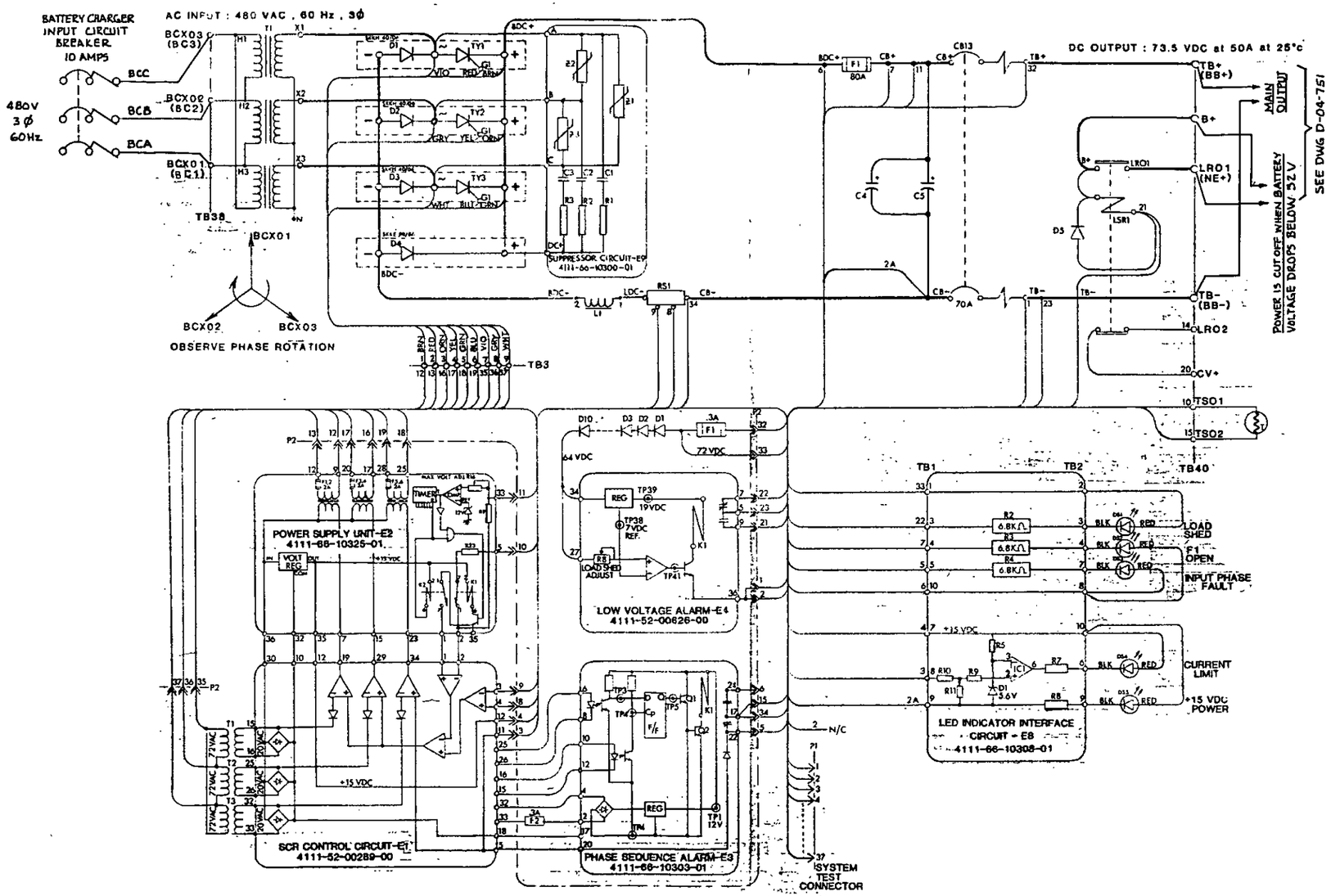

TROUBLESHOOTING PROCEDURE

STEP I: IF "INPUT PHASE FAULT" LED IS ON:

A. CHECK THAT 480 VAC POWER IS ON.
B. TURN OFF AC BREAKER AND REVERSE, ANY TWO AC INPUT LEADS BCO 12 OR BCO 13.
C. CHECK FUSE F2 ON MOTHERBOARD E7-P/N 4111-66-10309-01. IF OPEN, REPLACE WITH USMA FUSE.

D. IF LED STILL ON, REPLACE PHASE SEQUENCE ALARM PRINTED CIRCUIT BOARD E3-P/N 4111-66-10303-01.

STEP II: IF "15 VDC POWER" LED IS NOT ON:

A. CHECK THAT 480 VAC POWER IS ON.
B. REPLACE CONTROL E1 P/N 4111-52-00289-000 AND E2 P/N 4111-66-10325-01.

STEP III: IF "F1 OPEN" LED IS ON:

A. CHECK THAT BATTERY IS CONNECTED POSITIVE TO TB + ON TB39 AND BATTERY NEGATIVE TO TB- ON TB39. IF NOT, CONNECT CORRECTLY AND REPLACE FUSE F1. IF CORRECT, PROCEED TO (B).
B. REFER TO MANUAL FOR CHECKING AND ADJUSTING CURRENT LIMIT CIRCUIT. IF CURRENT LIMIT SET PROPERLY PROCEED TO (C).
C. REPLACE CONTROL E1 P/N 4111-52-00289-000 AND E2 4111-66-10325-01.

STEP IV: IF "CURRENT LIMIT" LED IS ON:

A. BATTERY MAY BE DISCHARGED AND REQUIRE CONSTANT CURRENT CHARGING. TO CHECK:

1. REMOVE ALL LOADS FROM THE BATTERY.
2. CHECK BATTERY VOLTAGE. IT SHOULD BE LESS THAN 80VDC. IF GREATER THAN 80VDC, REPLACE CONTROLS CARDS E1-P/N 4111-52-00289-00 AND E2 P/N 4111-66-10325-01.
3. IF LESS THAN 80VDC, REFER TO MANUAL FOR CHECKING AND ADJUSTING CURRENT LIMIT CIRCUIT. IF CURRENT LIMIT SET PROPERLY, PROCEED TO (4).
4. CHECK FOR 12±1 VDC AT TB1 TERMINAL 8 OF LED INDICATOR INTERFACE CIRCUIT E8 P/N 4111-66-10308-01. IF NO GOOD REPLACE CONTROL CARDS E8 P/N 4111-52-00289-00 AND E2 P/N 4111-66-10325-0. IF GOOD, REPLACE E8 P/N 4111-66-10308-01.

STEP V: IF "LOAD SHED" LED IS ON:

A. CHECK BATTERY VOLTAGE BETWEEN TB+ AND TB- TERMINALS OF TB39. IF VOLTAGE IS LESS THAN 64-1VDC, CHECK TEMPERATURE SENSOR FOR AN OPEN OF LOOSE CONNECTION. IF SENSOR IS GOOD REPLACE CONTROL CARDS E1 P/N 4111-52-00289-00 AND E2 P/N 4111-66-10325-01. IF BATTERY VOLTAGE IS GREATER THAN 65VDC, REPLACE :LOW VOLTAGE ALARM: CIRCUIT E4 P/N 4111-52-00626-00.

QTY	PART NUMBER	DESCRIPTION	MATERIAL	MFG/SPEC	P/L ITEM NO	ITEM

LIST OF MATERIAL

REFERENCE DRAWINGS: NIFE BGIE S100

EQUIPMENT ENGINEERING — Amtrak — National Railroad Passenger Corporation, 400 North Capitol Street, N.W., Washington, D.C. 20001

TITLE: NIFE BATTERY CHARGER SCHEMATIC (BGIE S 100)

DRAWING NUMBER: D-01-7119

SH 1 OF 1

MICROFILM RATIO: 24 X

DRAWING NUMBER C-01-7118 REV

REVISIONS				
LTR	ZONE	DESCRIPTION	DATE	APPR'D

480V 3Ø 60Hz

BATTERY CHARGER INPUT CIRCUIT BREAKER 10 AMPS

BATTERY CHARGER (UNDERFLOOR)
AC INPUT - WATTS 5000 VOLTS 480V 3Ø - 60Hz
DC OUTPUT - MAX 50 AMPS 80 VOLTS MAX (TEMPERATURE COMPENSATED VOLTAGE)

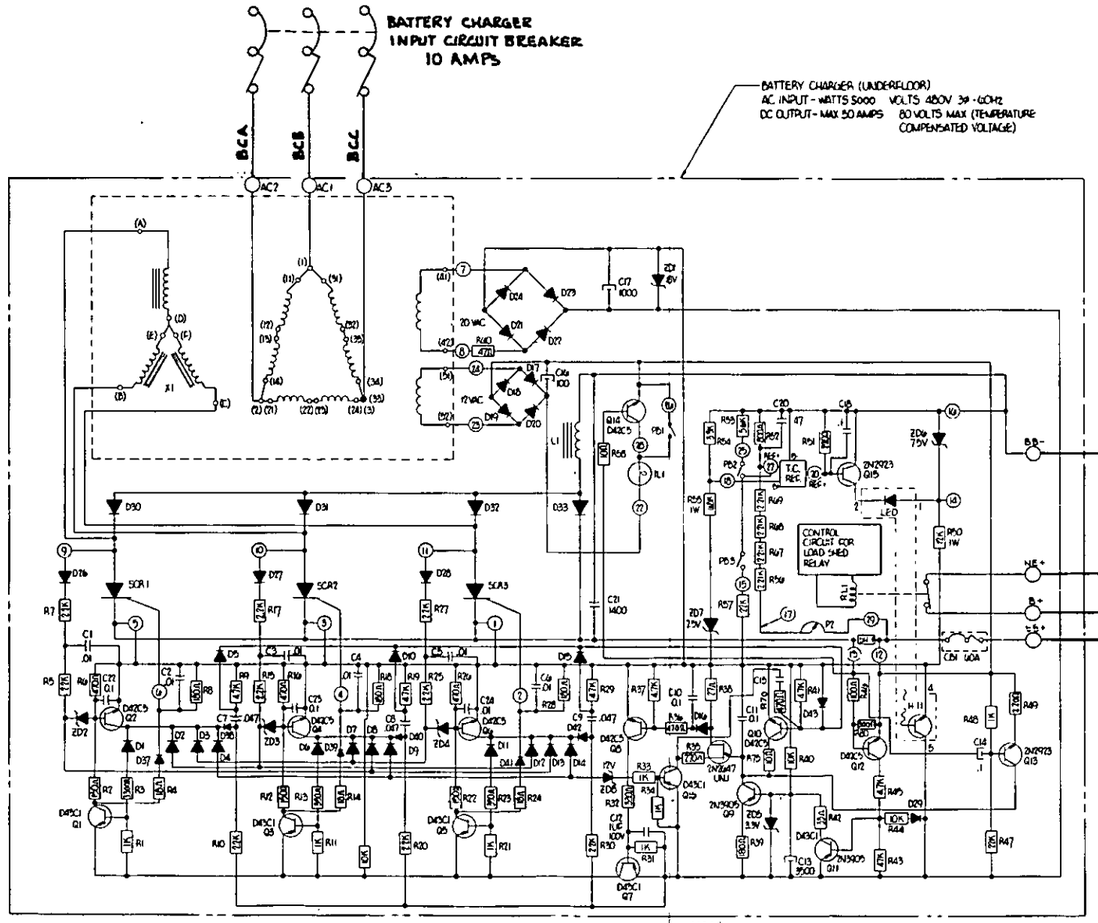

REVISIONS				
LTR	ZONE	DESCRIPTION	DATE	APP'D
A		CHANGED P/N ON ITEM 7 & ADDED -3 TO L/M	[illegible]	[illegible]
B		ADDED -4 ASSY AND NOTE 3	[illegible]	[illegible]
C		ADDED SHEET 2	[illegible]	[illegible]
D		ADDED CAR NUMBERS	[illegible]	RFD

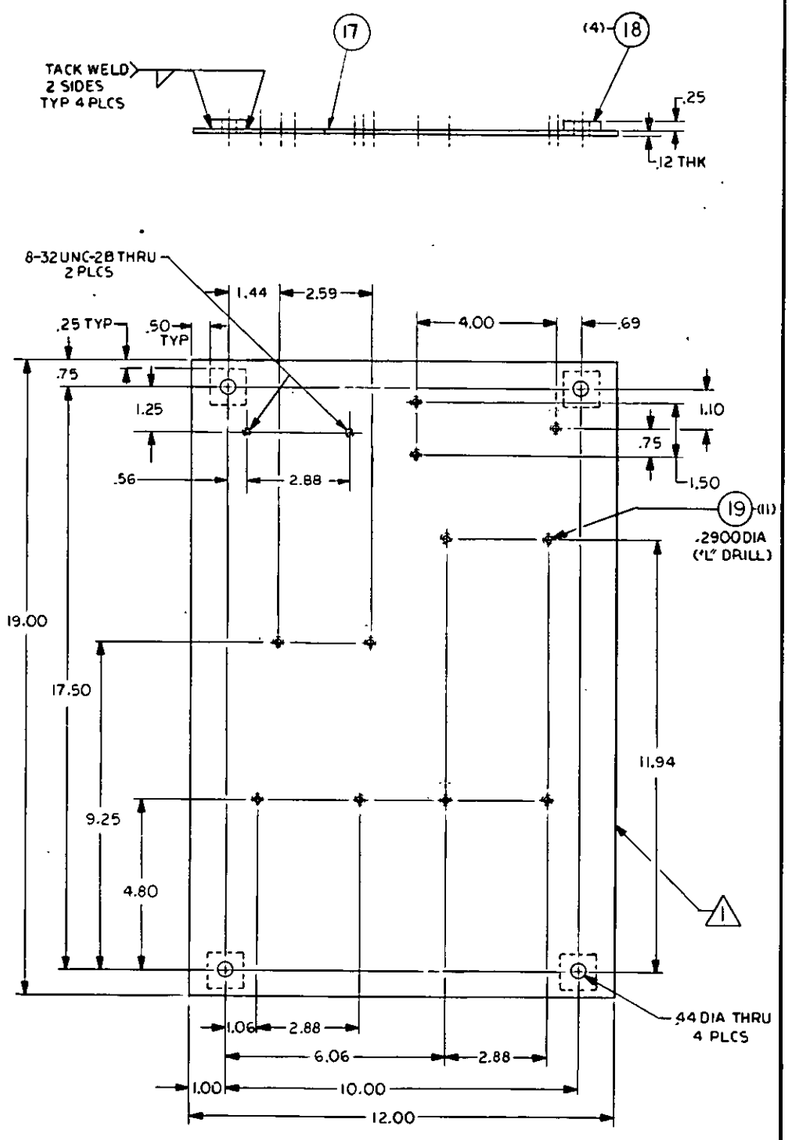

6 PANEL ASSY (WELDMENT)

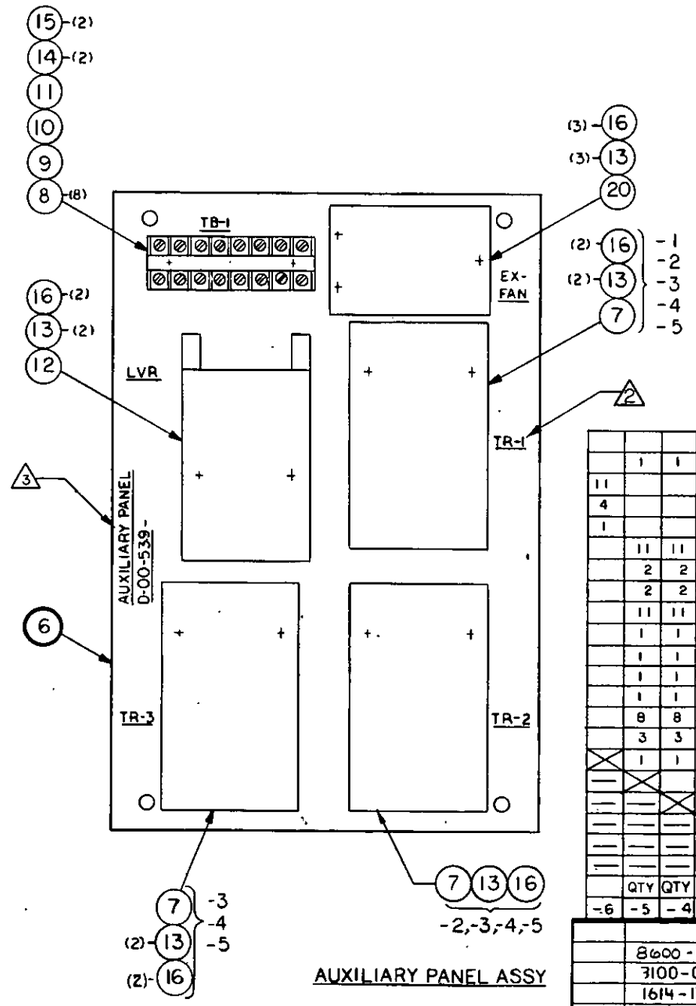

AUXILIARY PANEL ASSY

NOTES:

1. FINISH: ONE (1) COAT PRIMER AND TWO (2) COATS WHITE GLYPTOL PAINT.
2. UNDERLINED LABELS SHALL BE MARKED ON PANEL AFTER PAINTING APPROX AS SHOWN. CHARACTERS SHALL BE .19 HIGH, COLOR BLACK (PERMANENT MARKING)
3. MARK PANEL TO REPRESENT APPLICABLE ASSEMBLY
4. ADDED PANEL ON SHEET NO. 2

QTY/CAR	USED ON
	8600-05
	3100-05
	1614-17
	2880-83
	4600-26

-6	-5	-4	-3	-2	-1	AMTRAK P/N	DESCRIPTION	MFG/MAT'L	PART NO.	ITEM
	1	1	1	—	1		MAGNETIC CONTACTOR, 120V COIL	GE	CR205C022	20
11							NUTSERT, #10-32	AVK	ANS2-1032	19
4						-18	STANDOFF 1.00 X 1.00 X .25	CRS 1020		18
1						-17	PANEL, 19.00 X 12.00 X .12	CRS 1020		17
	11	11	11	9	7		WASHER, SPLIT LK #10	STL		16
	2	2	2	2	2		WASHER, SPLIT LK. #8	STL		15
	2	2	2	2	2		SCREW, RH #8-32 X 1/2 LG	STL		14
	11	11	11	9	7		SCREW, RH #10-32 X 1/2 LG	STL		13
	1	1	1	1	1		DC CONTACTOR W/O AUX CONTACTS	VAPOR	36040001	12
	1	1	1	1	1		MARKER STRIP			11
	1	1	1	1	1		TRACK MOUNTING		1492-N2	10
	1	1	1	1	1		END SECTION		1492-N11	9
	8	8	8	8	8		TERMINAL SECTION		1492-CD3130	8
	3	3	3	2	1		CONTACTOR, DPDT	VAPOR	37741141	7
X	1	1	1	1	1	-6	PANEL ASSY (WELDMENT)			6
—	X					-5	AUXILIARY PANEL ASSY 3100-05			5
—	—	X				-4	AUXILIARY PANEL ASSY 1614-17			4
—	—	—	X			-3	AUXILIARY PANEL ASSY 2880-83			3
—	—	—	—	X		-2	AUXILIARY PANEL ASSY			2
—	—	—	—	—	X	-1	AUXILIARY PANEL ASSY 4600-26, 8600-05			1

LIST OF MATERIAL

REFERENCE DRAWINGS:

EQUIPMENT ENGINEERING

Amtrak

National Railroad Passenger Corporation

TITLE: AUXILIARY PANEL ASSEMBLY

DRAWN: 3/28/79 | CHECKED: 9-5-79 RFD | APPROVED: 9-5-79 | APPROVED: 9-5-79

SCALE: 1/2 | DRAWING NO. D-00-539 | D

SH. 1 OF 2

61-1

REVISIONS				
LTR	ZONE	DESCRIPTION	DATE	APP'D

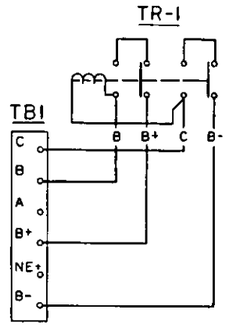

WIRING (COACH)
D-00-539-1

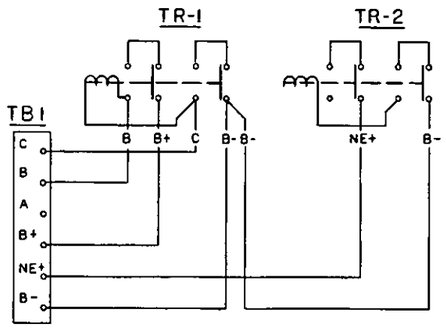

WIRING (DINER)
D-00-539-2

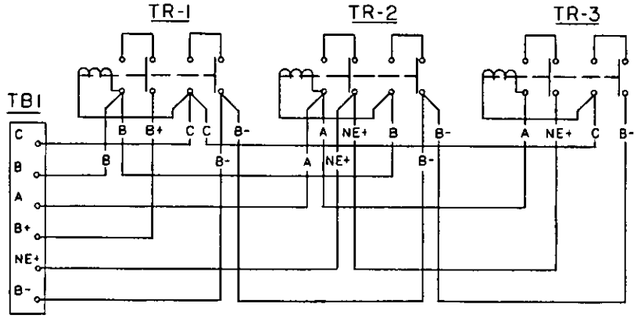

WIRING (SLEEPER-SLUMBER COACH)
D-00-539-3

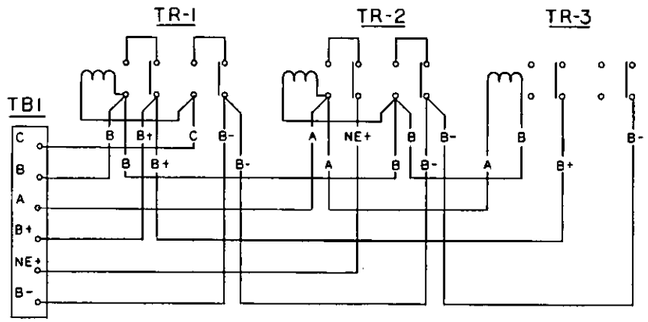

WIRING (BAGGAGE/DORMINTORY)
D-00-539-4

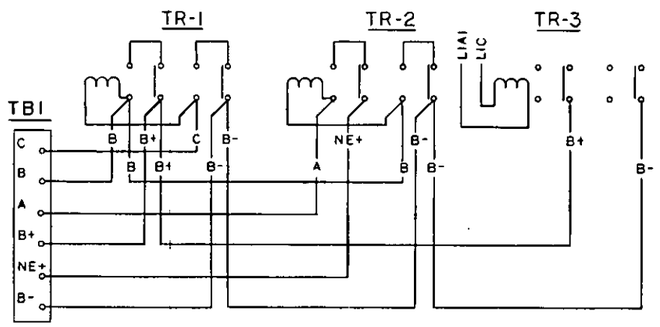

WIRING (LOUNGE)
D-00-539-5

REFERENCE DRAWINGS:	EQUIPMENT ENGINEERING Amtrak National Railroad Passenger Corporation	TITLE AUXILIARY PANEL ASSEMBLY
		DRAWN / CHECKED / APPROVED / APPROVED
	FRACTIONS / ANGLES / DECIMALS	SCALE None / DO NOT SCALE DRAWING / DRAWING NO D-00-539 C

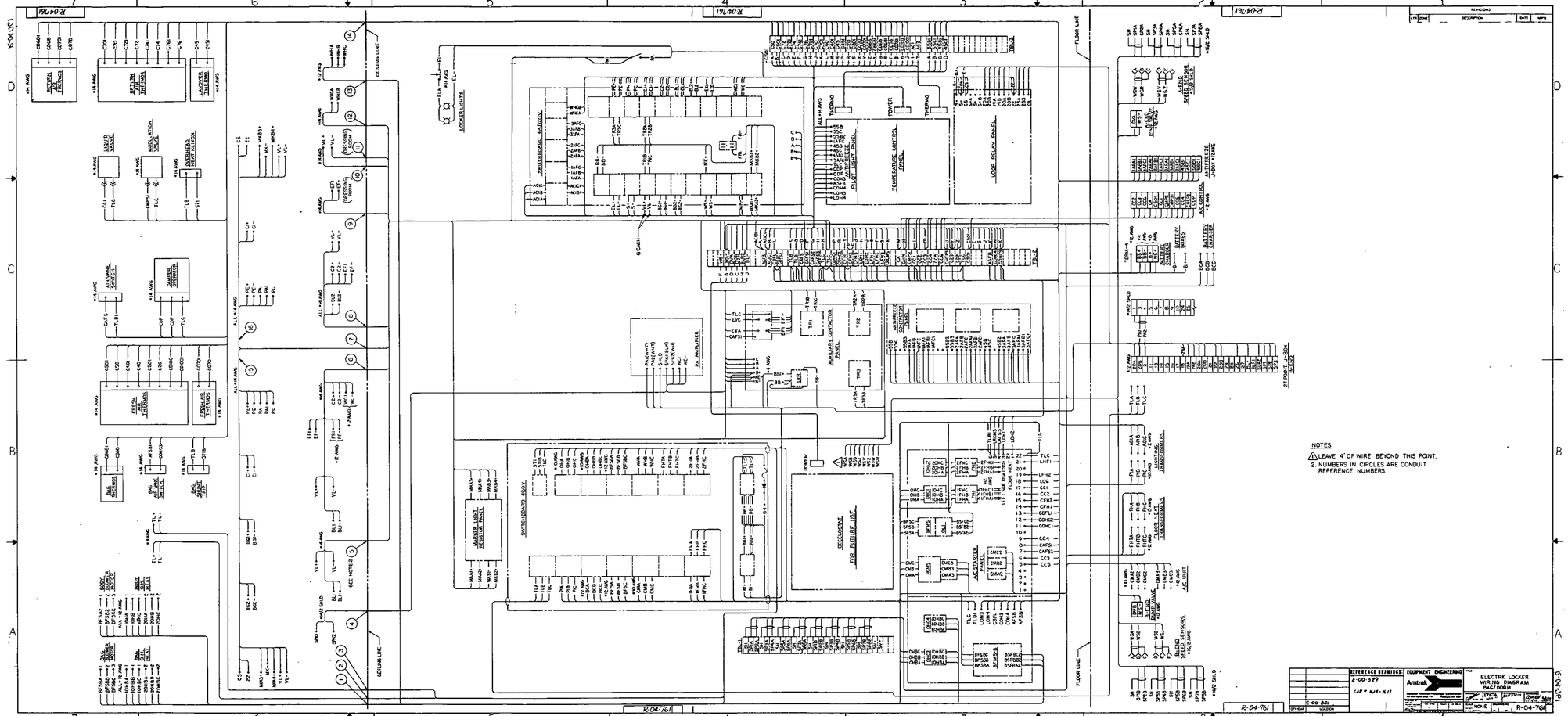
NOTES.
1. LEAVE 4' OF WIRE BEYOND THIS POINT.
2. NUMBERS IN CIRCLES ARE CONDUIT REFERENCE NUMBERS.
ELECTRIC LOCKER WIRING DIAGRAM BAG/DORM
EQUIPMENT ENGINEERING
Amtrak
REFERENCE DRAWINGS
E-00-529
CAR #614-1617
E-00-801
R-04-761
SWITCHBOARD 480V
SWITCHBOARD 64A120V
LOCKER LIGHTS
CEILING LINE
FLOOR LINE
OCCUPANT FOR FUTURE USE
PILOT LIGHT PANEL
TEMPERATURE CONTROL PANEL
LOAD RELAY PANEL
AUXILIARY CONTACTOR PANEL
PA AMPLIFIER
AC STARTER PANEL
LIGHTING TRANSFORMERS
FLOOR HEATERS TRANSFORMERS
AC UNIT
BLIND DRIVE MOTOR
BLIND HEATER
FLOOR HEATERS
BAG HEATERS
FRESH AIR THERMOSTATS
AIR VANE SWITCH
DAMPER OPERATOR
LIQUID VALVE
MOLATION VALVE
OVERHEAD HEAT RELEASE
PRESSURE SWITCH
ANTIFREEZE
BATTERY CHARGER
BATTERY BOLTS
AC CONTROL
SKELETON LOCKER
AUDIO SYSTEM
27 POINT J-101
J-101 TO CAR
J-201 TO CAR
R-04-761

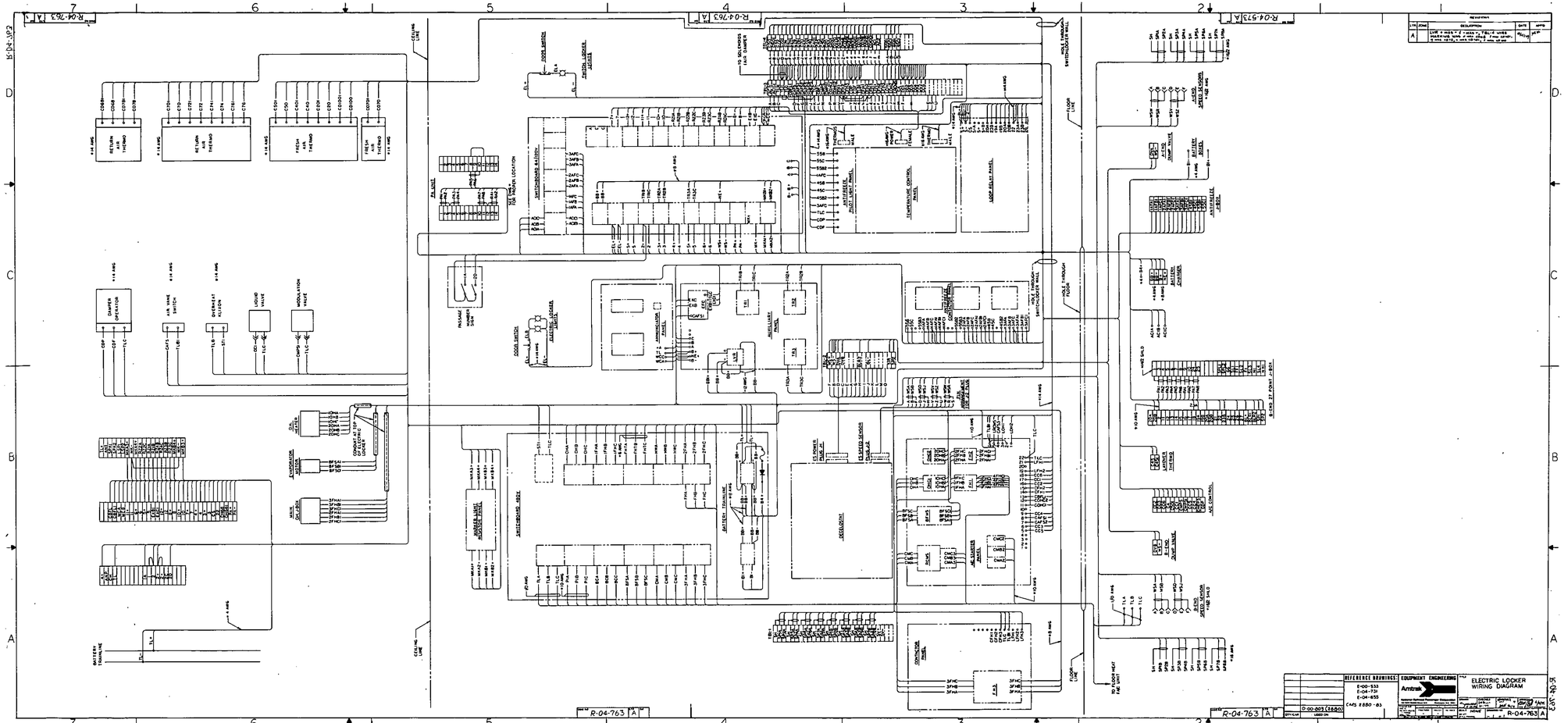

REFERENCE DRAWINGS:
E-00-533
E-04-731
E-04-655
CMS 2880-83
EQUIPMENT ENGINEERING
Amtrak
ELECTRIC LOCKER WIRING DIAGRAM
R-04-763 A

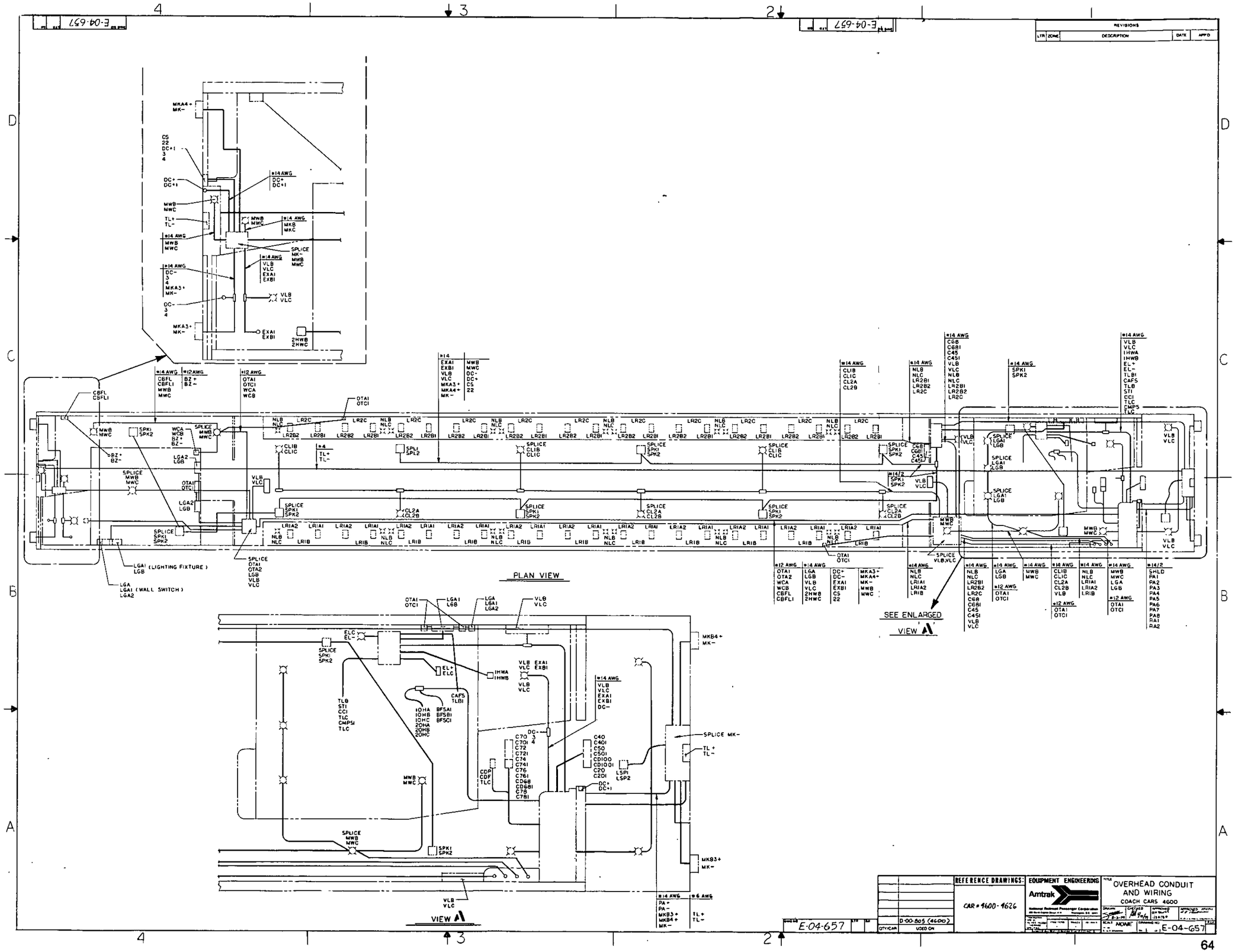

E-04-657
REVISIONS
LTR ZONE DESCRIPTION DATE APP'D
PLAN VIEW
SEE ENLARGED VIEW 'A'
VIEW A
REFERENCE DRAWINGS:
CAR # 4600-4626
EQUIPMENT ENGINEERING
Amtrak
OVERHEAD CONDUIT AND WIRING
COACH CARS 4600
D-00-805 (4600)
QTY/CAR
USED ON
E-04-657

REVISIONS				
LTR	ZONE	DESCRIPTION	DATE	APP'D
A		REDESIGNED AND REDRAWN		
B		ADDED NEW CAR SERIES. MRB	11/3/80	RFBRUSS
C		ADDED 9400 CAR SERIES.	9/19/83	RFBRUSS
D		ADDED DETAIL A & B. REVISED WIRING FROM DISCONNECT PLUG & RECEPT. TO MAG. SPEED SENSOR PICKUP	9/20/83 MRB	RFBRUSS 9-22-83
E		ADDED CAR NUMBER & REVISED NOTICE.	3/27/84	RFBRUSS

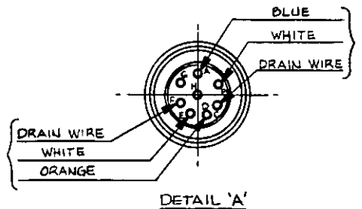

DETAIL 'A'

TRUCK CONNECTOR
FACE VIEW

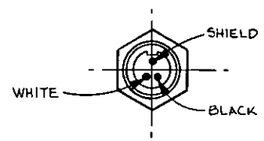

DETAIL 'B'

TRUCK FEMALE CONNECTOR
FACE VIEW

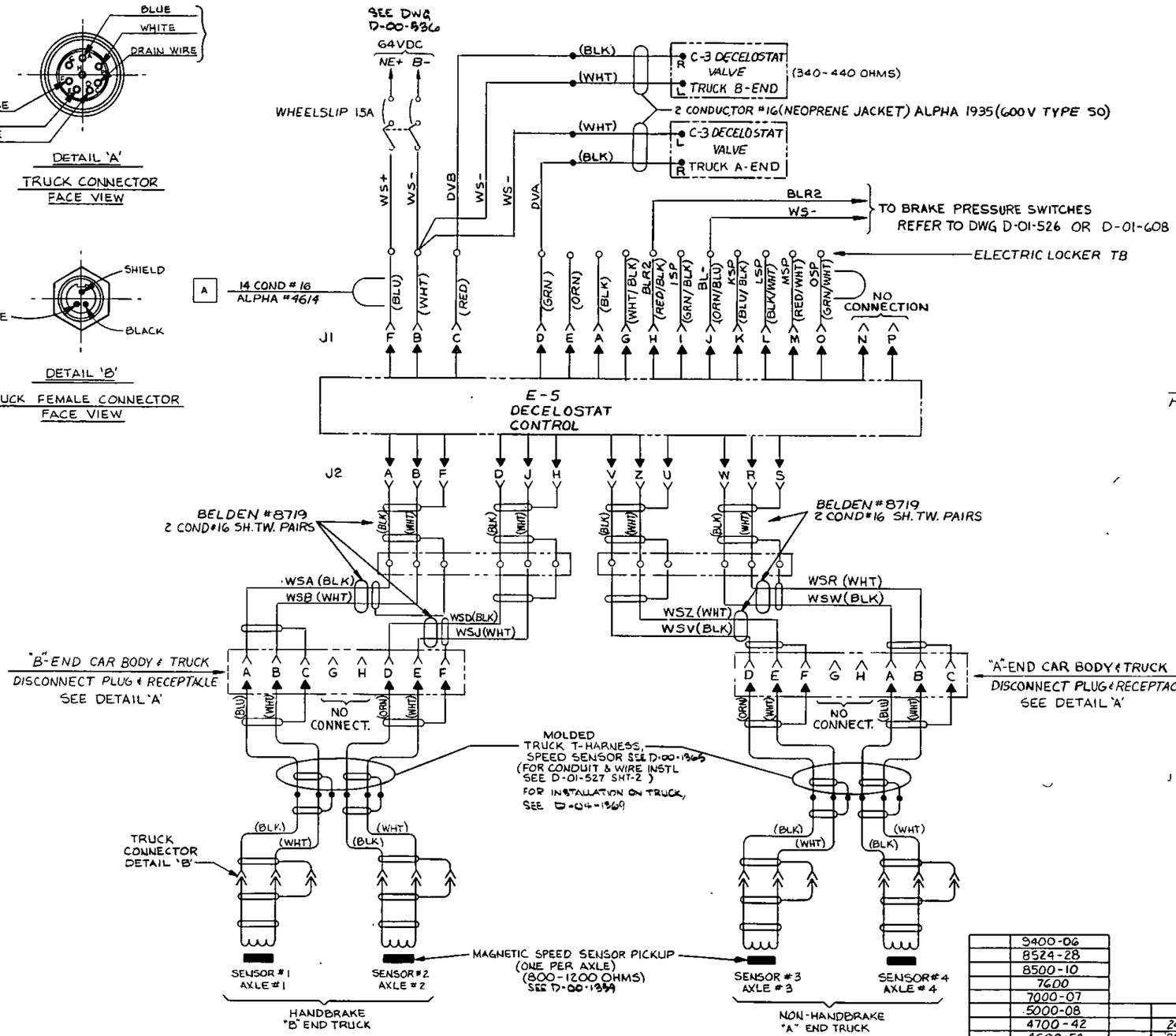

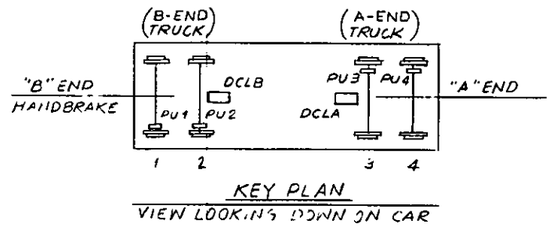

KEY PLAN
VIEW LOOKING DOWN ON CAR

NOTES:
1. O - INDICATES JUNCTION BOX TERMINAL
2. ALL WIRE #12 AWG UNLESS OTHERWISE NOTED.

A TABLE OF HOT JOURNAL WIRES
FUTURE AND OTHER SPARES
2/C #16 TW SHL'D'D PAIRS, BELDEN #8719
AND SIZES LISTED

START	WIRE CODE	DESTINATION (12" SLACK IN BOX, TAPE ENDS
ELECTRIC LOCKER	HJ1A WHT HJ1B BLK	#2 TRUCK, #2 AXLE AREA
DEAD END WIRES ON TERMINAL BLOCK	HJ2A WHT HJ2B	#2 TRUCK, #1 AXLE AREA
	HJ3A WHT HJ3B	#2 TRUCK, #2 AXLE AREA
	HJ4A WHT HJ4B	#2 TRUCK, #1 AXLE AREA
SHIELDS DEAD ENDED AND NOT CONNECT'D	HJ5A WHT HJ5B	#1 TRUCK, #4 AXLE AREA
	HJ6A WHT HJ6B	#1 TRUCK, #3 AXLE AREA
	HJ7A WHT HJ7B	#1 TRUCK, #4 AXLE AREA
	HJ8A WHT HJ8B	#1 TRUCK #3 AXLE AREA
DEAD END E.LK	HJ - #12 WIRE	TRAINLINE WIRE TO PIN #21
DEAD END IN "A" & B ENDS T/L BOXES	STL1, STL2, STL3, STL4 #12 WIRES	4 SPARE WIRES NOT CONNECTED IN CAR

NOTICE

THIS SHEET APPLIES ONLY TO CARS WITH MOLDED T-HARNESS TRUCK WIRING. SEE SHEET 2 FOR CARS WHICH USE DESCRETE WIRE ON THE TRUCKS.

QTY/CAR	USED ON	QTY/CAR	USED ON	QTY/CAR	USED ON	QTY/CAR	USED ON
			7620-24		9400-06		2482
	8700-04		9407-11		8524-28		2430-73
	8600-05		~~2280-85~~		8500-10		2080-97
	8580		~~2220-22~~		7600		1622-25
					7000-07		1170-74
					5000-08		1139
					4700-42		1133-36
					4600-50		1128-31
					4000-26		
					3112-27		
					2980-97		
					2900-41		
					2871-94		

REFERENCE DRAWINGS:

REF. SH. 1

EQUIPMENT ENGINEERING
Amtrak
National Railroad Passenger Corporation

TITLE: E-5 DECELOSTAT CONTROLLER SYSTEM WIRING DIAGRAM

DRAWN 9/19/83 QUAN CHEN
CHECKED MRB
APPROVED RFBRUSS 9-22-83
APPROVED L.OH 9-27-83

SCALE NONE
DRAWING NO D-01-527
SH 1 OF 2
REV E

REVISIONS				
LTR	ZONE	DESCRIPTION	DATE	APP'D
A		REDESIGNED AND REDRAWN		
B		ADDED NEW CAR SERIES. MRD	11/3/80	
C		ADDED 9400 CAR SERIES. MRD	9/19/03	RFBRUSS
D		ADDED CAR NUMBERS, & REVISED NOTES.	9/09/04	RFBRUSS

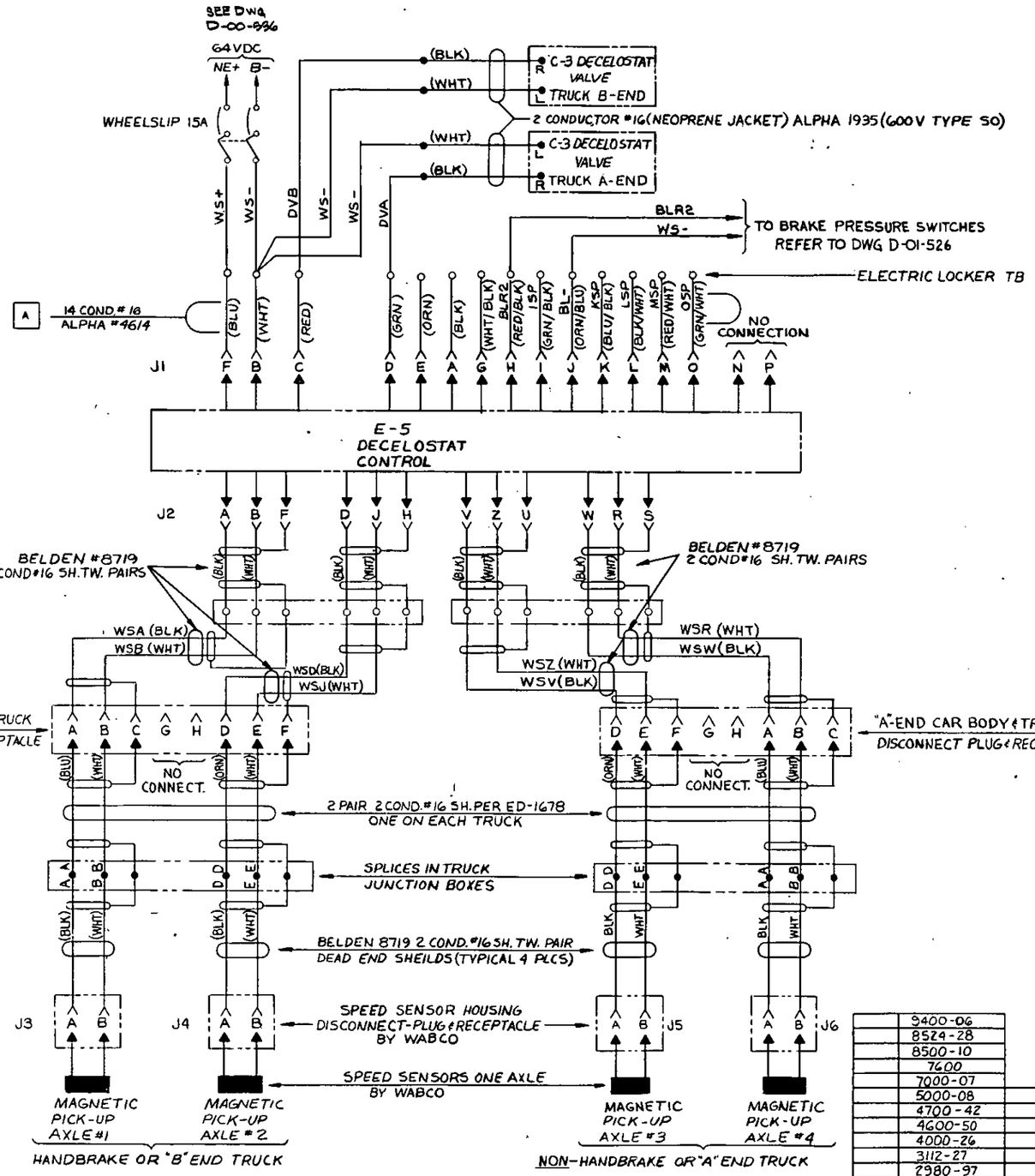

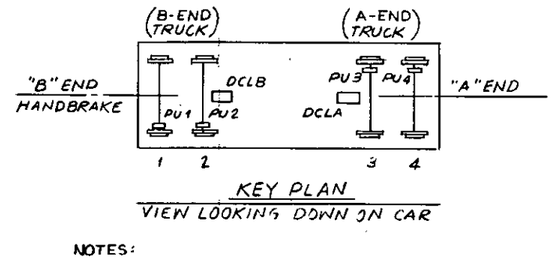

KEY PLAN
VIEW LOOKING DOWN ON CAR

NOTES:
1. O - INDICATES JUNCTION BOX TERMINAL
2. ALL WIRE #12 AWG UNLESS OTHERWISE NOTED.

[A] TABLE OF HOT JOURNAL WIRES FUTURE AND OTHER SPARES 2/C #16 TW SHL'D'D PAIRS, BELDEN #8719 AND SIZES LISTED

START	WIRE CODE	DESTINATION (12" SLACK IN BOX, TAPE ENDS
ELECTRIC LOCKER	HJ1A WHT HJ1B BLK	#2 TRUCK, #2 AXLE AREA
DEAD END WIRES ON TERMINAL BLOCK	HJ2A WHT HJ2B	#2 TRUCK, #1 AXLE AREA
	HJ3A WHT HJ3B	#2 TRUCK, #2 AXLE AREA
	HJ4A WHT HJ4B	#2 TRUCK, #1 AXLE AREA
SHIELDS DEAD ENDED AND NOT CONNECT'D	HJ5A WHT HJ5B	#1 TRUCK, #4 AXLE AREA
	HJ6A WHT HJ6B	#1 TRUCK, #3 AXLE AREA
	HJ7A WHT HJ7B	#1 TRUCK, #4 AXLE AREA
	HJ8A WHT HJ8B	#1 TRUCK #3 AXLE AREA
DEAD END E.LK	HJ - #12 WIRE	TRAINLINE WIRE TO PIN #21
DEAD END IN "A" & B ENDS T/L BOXES	STL1, STL2, STL3, STL4 #12 WIRES	4 SPARE WIRES NOT CONNECTED IN CAR

NOTICE:
THIS SHEET APPLIES ONLY TO CARS WITH DESCRETE WIRED TRUCK WIRING. FOR CARS WITH MOLDED T-HARNESS SEE SHT-1

QTY/CAR	USED ON	QTY/CAR	USED ON
	9400-06		
	8524-28		
	8500-10		2482
	7600		2430-73
	7000-07		2080-95
	5000-08		1622-25
	4700-42		1170-74
	4600-50		1139
	4000-26		1133-36
	3112-27		1128-31
	2980-97		
	2900-41		
	2871-94		

REFERENCE DRAWINGS:

EQUIPMENT ENGINEERING
Amtrak
National Railroad Passenger Corporation

TITLE: E-5 DECELOSTAT CONTROLLER SYSTEM WIRING DIAGRAM

DRAWN 10/18/78 AWKROD | CHECKED | APPROVED | APPROVED

SCALE NONE | DRAWING NO D-01-527 | REV D

SHT 2 OF 2

REVISIONS				
LTR	ZONE	DESCRIPTION	DATE	APP'D
A		ADD MICROSWITCH TO CONTACTOR COIL CIRCUIT	2/4/80	RFBRUSS 2/29/80
B		TLC & CVMC WERE WIRED TO VTC & VTN BREAKER	3/28/80	RFBRUSS
C		ADDED NEW CAR SERIES & 15A CIRCUIT BREAKER DESIG.	7/10/80 MRB	RFBRUSS
D		CORRECTED 15A TO 20A PER CMP DRAWING.	1/5/81 MRB	RFBRUSS
E		ADDED CAR NUMBER SERIES	3/26/84	RFBRUSS

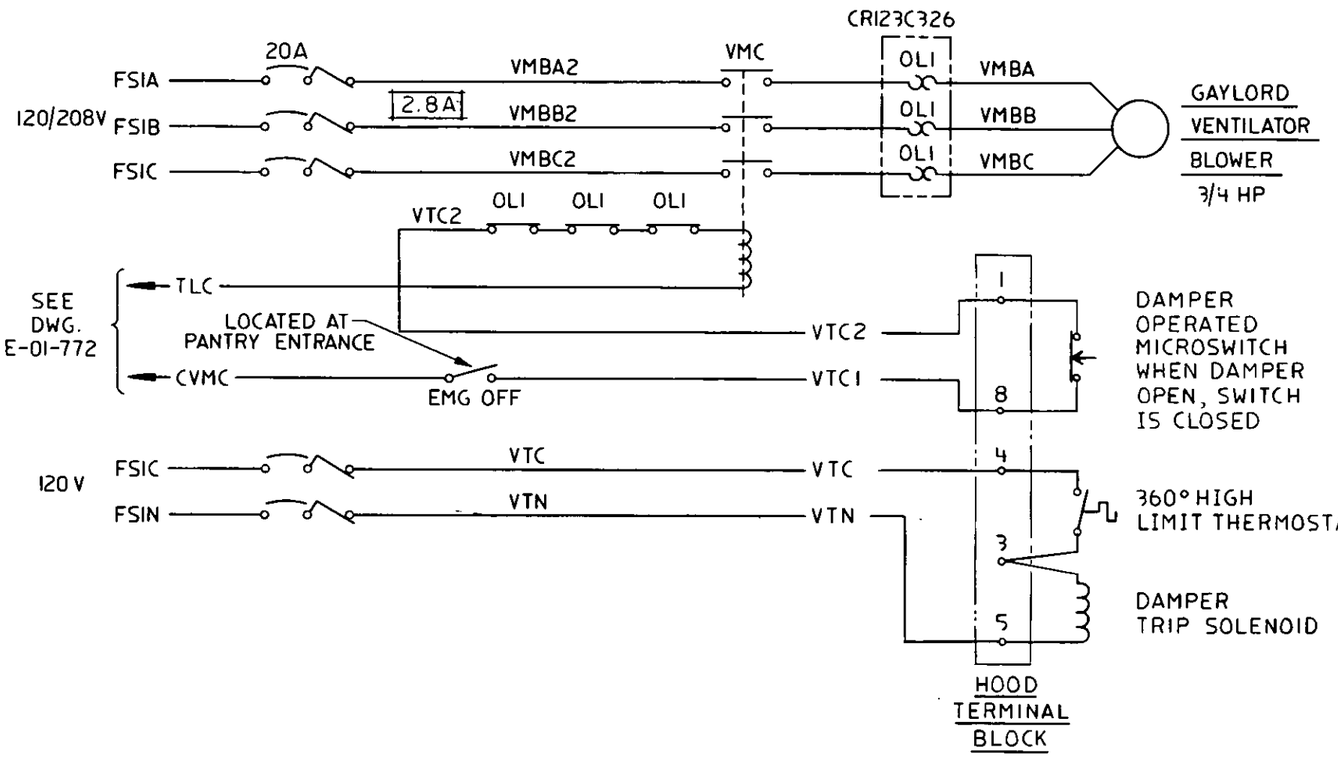

QTY/CAR	USED ON
	8529-30
	8509 - 8528
	8500-8508

REFERENCE DRAWINGS:

EQUIPMENT ENGINEERING

Amtrak

National Railroad Passenger Corporation
400 N Capitol St., Washington, D.C. 20001

DIMENSIONS ARE IN INCHES UNLESS OTHERWISE SPECIFIED
TOLERANCES UNLESS OTHERWISE SPECIFIED
DECIMALS X ±. XX ±.
ANGLES ±1/2°
REMOVE ALL BURRS-BREAK SHARP CORNERS

TITLE: GAYLORD VENTILATOR CONTROL SCHEMATIC DINER

DR: 1-22-80 APPD: 1-22-80 APPD: APPD FOR ISSUE:
CKD: APPD: APPD:
SCALE: NA
SH: 1 OF 1
DRAWING NO. C-01-715
REV. E

E-01-822

REVISIONS				
LTR	ZONE	DESCRIPTION	DATE	APPRD
B		REDRAWN & REVISED. TITLE WAS "SCHEMATIC WIRING LOAD DATA" DWG NUMBER WAS 0-ON-822. M.E.D.	4/11/80	
C		REFINED CURRENT VALUES	11/7/86 MEB	11/26/86 RP-86-41

480 VOLT TRAINLINE
3 150A MAIN
A,B,C → HEATING & A/C WIRING
WIRING, LIGHTING, & CONV. OUTLETS
3 60A FOOD SERVICE PRIMARY
FULL LOAD 43.3A
FSA,B,C
3@15 KVA = 45 KVA
480V
208/120V
FSN
FSN FSIA1 B1 C1
3 150 A FOOD SERVICE SECONDARY
CONNECTED LOAD 99.6A
FSN,FSIA,B,C
TRANSFER CONTACTOR NEMA-2
FSTC
NORM
STANDBY
FS2A3,B3,C3
C581
STANDBY POWER 50A
208/120V
A,B,C
220V
220V 100A STANDBY RECEPTACLES
30 TRANS 15 KVA
FS2A1,B1,C1
3 50A FOOD PRESERVATION
FSN FS2A,B,C
186A
81.0A

						DUTY CYCLE
A,B,C	50A 3	22.8A GA,B,C	5	208V	GRIDDLE (FUTURE)	(8000 VA) (4000 VA)
B,C,N	30A 3	27.4A CO1B,C,N	6	120/208V	CONVECTION OVEN #1	5700 VA 2850 VA
A,B,N	30A 3	27.4A CO2A,B,N	7	120/208V	CONVECTION OVEN #2	5700 VA 2850 VA
A,B,N	30A 3	13.4A CBA,B,N	8	208V	COFFEE BREWER	2780 VA 695 VA
A,B,C	30A 3	22.2A CUA,B,C	9	208V	COFFEE URN	8000 VA 4000 VA
A,N	15A 2	3.0A CCUA,N	33	120V	COFFEE URN CONTROL	360 VA 90 VA
A,B,C	15A 3	VBMA2,B2,C2 — VMC — VBMA1,B1,C1 2.8A VBMA,B,C	10	208V	GAYLORD VENTILATOR (FUTURE)	(1000 VA) (1000 VA)
C,N	15A 2	— VTC,N	11	120V	VENTILATION THERMOSTAT (FUTURE)	— —
B,C	15A 2	13.0A MOB,C	12	208V	MICROWAVE OVEN	2700 VA 1350 VA
A,C	15A 2	9.6A FWTA,C	13	208V	FOOD WARMER	2000 VA 1000 VA
A,C	15A 2	12.5A TIA,C	14	208V	TOASTER	2000 VA 500 VA
B,N	20A 2	— DRIB,N	15	120 V	RECEPTACLE #1	— —
					NON-VITAL	29.24 KVA 13.34 KVA
					FOOD PRESERVATION	6.70 KVA 6.70 KVA
					TOTAL	35.94 KVA CONNECTED LOAD 20.04 KVA ESTIMATED DUTY CYCLE LOAD

FEED FROM EXHAUST FAN CONTACTOR ← 1EXIA,C 15A 2 — VFA,C 46A — 31 — 120 V — VENTILATION FAN CONVECTION OVENS 245 CFM — 55 VA

						DUTY CYCLE
C,N	20A 2	— DR2C,N	16	120V	RECEPTACLE #2	—
A,N	15A 2	2.4A REC1A,N	17	120V	2 DOOR REF. EVAP. COIL #1	290 VA
A,N	15A 2	2.4A REC2A,N	18	120V	2 DOOR REF. EVAP. COIL #2	290 VA
A,N	15A 2	2.4A REC3A,N	19	120V	2 DOOR REF. EVAP. COIL #3	290 VA
B,N	15A 2	2.4A REC4B,N	20	120V	2 DOOR REF. EVAP. COIL #4	290 VA
C,N	15A 2	2.4A REC5C,N	21	120V	2 DOOR REF. EVAP. COIL #5	290 VA
C,N	15A 2	1.7A REC6C,N	22	120V	REF. DISPLAY EVAP. COIL #6	200 VA
A,N	15A 2	NORMAL DEFROST 2.7A/4.6A FEC1A,N	23	120V	2 DOOR FREEZER EVAP. COIL #1	320 VA
B,N	15A 2	2.7A/4.6A FEC2B,N	24	120V	2 DOOR FREEZER EVAP. COIL #2	320 VA
C,N	15A 2	2.3A/4.6A FEC3C,N	25	120V	2 DOOR FREEZER EVAP. COIL #3	280 VA
B,N	15A 2	2.7A/4.6A FEC4B,N	26	120V	2 DOOR FREEZER EVAP. COIL #4	320 VA
A,N	20A 2	8.6A RC1A,N	27	120V	REF. COMP. # 1	1030 VA
B,N	20A 2	8.6A RC2B,N	28	120V	REF. COMP. # 2	1030 VA
A,C	20A 2	8.4A FCA,C	29	208V	REF COMP #3	1750 VA
					TOTAL	6.70 KVA 6.70 KVA DUTY CYCLE OF 1 ASSUMED

QTY	PART NUMBER	DESCRIPTION	MATERIAL	MFG/SPEC	ITEM

LIST OF MATERIAL

REFERENCE DRAWINGS.
3106-3111
3100-3105
QTY/CAR
USED ON
NONE

EQUIPMENT ENGINEERING
Amtrak
SINGLE LINE FOOD SERVICE LOUNGE
E-01-822
C

MICROFILM RATIO 30X

67

LTR	ZONE	REVISIONS DESCRIPTION	DATE	APPRD
B		REDRAWN & REVISED TITLE WAS "SCHEMATIC WIRING LOAD DATA" DWG NUMBER WAS D-04-821	6/79	CFF
C		REFINED CURRENT VALUES, ECS	12/8/80	RWB 7/7
D		GAYLORD VENTILATOR CIRCUIT BREAKER WAS 15A	1/6/81	RWB 1/6/81
E		CHANGED CONVECTION OVENS TO 30 FROM 10 ALSO CHANGED OVENS FROM 5.7 TO 6.4 KW	9/23/86	RWB 10-3-86

480 VOLT TRAINLINE

200A MAIN

A,B,C → HEATING & A/C WIRING
WIRING, LIGHTING, & CONV. OUTLETS

125A FOOD SERVICE PRIMARY

FULL LOAD 86.6A — FSA, FSB, FSC

30 KVA / 75 KVA — 480V

208/120V — FSN

FSN
FS1A1
FS1B1
FS1C1

225A FOOD SERVICE SECONDARY

CONNECTED LOAD 200.0A — FSN, FS1A, B, C

TRANSFER CONTACTOR NEMA-2 — FSTC

C581

FS2A3, B3, C3

STANDBY POWER 50A

208/120V — A,B,C — 220V

3Ø TRANS 15 KVA

220V 100A STANDBY RECEPTACLES

NORM / STANDBY

FS2A1, B1, C1

50A FOOD PRESERVATION

FSN
FS2A, B, C

19.8A

180.0A

					DUTY CYCLE
ABC 50A	33.4A GA,B,C	5	208V	GRIDDLE	12,000 VA	6000 VA
ABC 30A	17.5A DWA,B,C	6	208V	DISHWASHER	6300 VA	1575 VA
ABC 30A	18.4A CO1A,B,C	7	120/208V	CONVECTION OVEN #1	6400 VA	9200 VA
ABC 30A	18.4A CO2A,B,C	8	120/208V	CONVECTION OVEN #2	6400 VA	9200 VA
ABC 30A	18.4A CO3A,B,C	9	120/208V	CONVECTION OVEN #3	6400 VA	9200 VA
AB-N 30A	13.4A CB1A,B,N	10	120/208V	COFFEE BREWER #1	2780 VA	695 VA
AB-N 30A	13.4A CB2A,B,N	11	120/208V	COFFEE BREWER #2	2780 VA	695 VA
ABC 20A	VBMA2, B2, C2 VMC VBMA1, B1, C1 — 2.8A VBMA,B,C	12	208V	GAYLORD VENTILATOR 850 CFM	1000 VA	1000 VA
CN 15A	— VTC,N	13	120V	VENTILATION THERMOSTAT	—	—
BC 30A	26.0A MOB,C	14	208V	MICROWAVE OVEN	5400 VA	2700 VA
AB 30A	25.0A HPA,B	15	208V	HOT PLATE	5200 VA	2600 VA
AC 30A	19.2A FWTA,C	16	208V	FOOD WARMER TRAY	4000 VA	2000 VA
BC 15A	8.7A FWDB,C	17	208V	FOOD WARMER DRAWER	1800 VA	900 VA
AC 15A	12.5A T1A,C	18	208V	TOASTER #1	2600 VA	650 VA
AC 15A	12.5A T2A,C	19	208V	TOASTER #2	2600 VA	650 VA
BC 15A	— TB,C	20	208V	TOASTER (ALTERNATE)	—	—
CN 15A	4.2A DDC,N	21	120V	DISH DISPENSER	500 VA	250 VA
BN 15A	3.8A SWB,N	22	120V	SOUP WARMER	450 VA	225 VA
CN 20A	2.5A WPC,N	23	120V	WARMING PADS	300 VA	300 VA
AN 20A	— DRIA,N	24	120V	RECEPTACLE #1	—	—
				NON-VITAL	66.91 KVA	29.84 KVA
				FOOD PRESERVATION	7.14 KVA	7.14 KVA
				TOTAL	74.05 KVA CONNECTED LOAD	36.98 KVA ESTIMATED DUTY CYCLE LOAD

						DUTY CYCLE
BN 20A	— DR2B,N	25	120V	RECEPTACLE #2	—	—
AN 15A	.8A REC1A,N	26	120V	REF. DRAWER EVAP COIL #1	100 VA	
BN 15A	.8A REC2B,N	27	120V	SANDWICH REF EVAP COIL #2	100 VA	
CN 15A	.8A REC3C,N	28	120V	ICE STORAGE REF EVAP COIL #3	100 VA	
AN 15A	2.4A REC4A,N	29	120V	2 DOOR REF EVAP COIL #4	290 VA	
BN 15A	2.4A REC5B,N	30	120V	2 DOOR REF EVAP COIL #5	290 VA	
CN 15A	2.4A REC6C,N	31	120V	2 DOOR REF EVAP COIL #6	290 VA	
AN 15A	2.4A REC7A,N	32	120V	2 DOOR REF EVAP COIL #7	290 VA	
AN 15A	2.7A,4.6A FEC1A,N	33	120V	2 DOOR FREEZER EVAP COIL #1	320 VA	
BN 15A	2.7A,4.6A FEC2B,N	34	120V	2 DOOR FREEZER EVAP COIL #2	320 VA	
CN 15A	2.7A,4.6A FEC3C,N	35	120V	2 DOOR FREEZER EVAP COIL #3	320 VA	
AN 20A	8.6A RC1A,N	36	120V	REF COMP #1	1030 VA	
BN 20A	8.6A RC2B,N	37	120V	REF COMP #2	1030 VA	
CN 30A	12.5A FCC,N	38	120V	REF COMP #3	1500 VA	
BN 15A	5.3A MCB,N	40	120V	MAITRE'D COOLER	540 VA	
AN 15A	1.85A LA,N	1	120V	CEILING LIGHTS	222 VA	
CN 15A	3.33A HLC,N	2	120V	HEAT LAMP	400 VA	
C.B. ELECTRIC LOCKER 6 K± 5.2A	15A 1K± — 2.9A	3	75V	210W DC COUNTER LTS	TOTAL 7.14 KVA	7.14 KVA DUTY CYCLE OF 1 ASSUMED
	15A 2K± — 2.3A	4	75V	175W DC COUNTER LTS	KITCHEN AREA SWITCHBOARD	
C.B. ELECTRIC LOCKER 12+,12 EL±	WALL SW 12A,12	5	75V	DC EMERGENCY LTS		
	DOOR SW	50W	75V	ELECTRIC LKR LT		

REFERENCE DRAWINGS: D-00-806, 8500-8508

EQUIPMENT ENGINEERING — Amtrak

SINGLE LINE FOOD SERVICE DINER

SCALE: NONE — E-01-821

SCHEDULE DATE: 30X

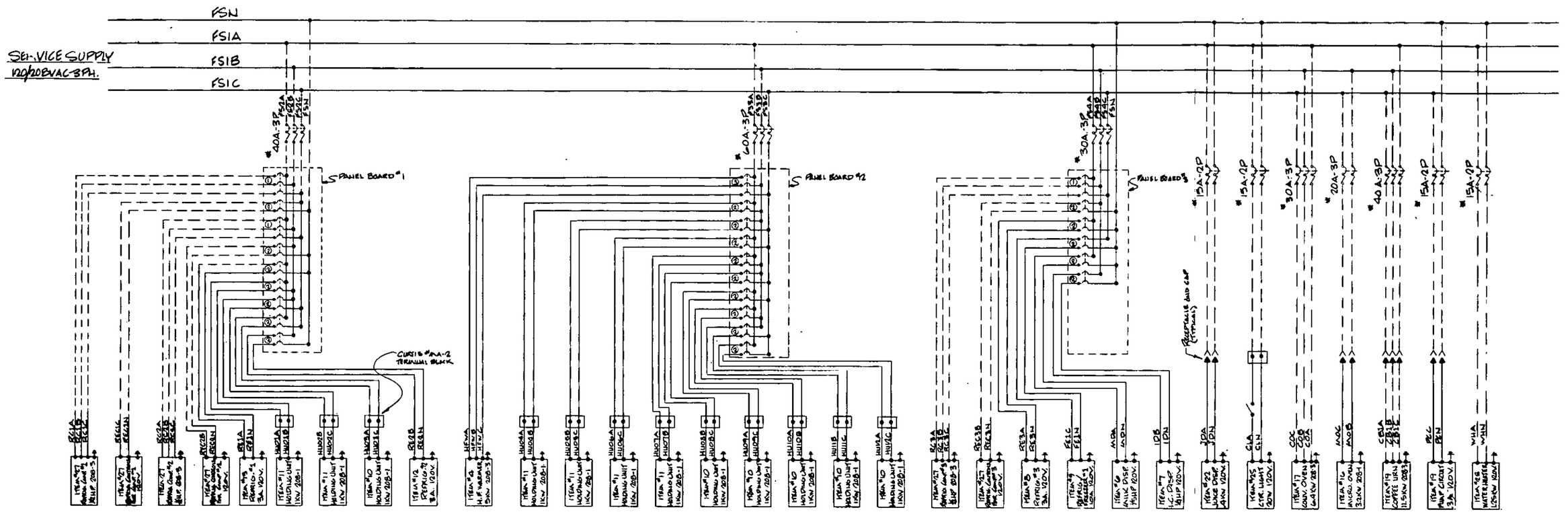

CIRCUIT BREAKER LEGEND			
REF.	RATING	MANUFACTURER	MODEL
①	15A-3P	WESTINGHOUSE	QC3015H
②	15A-2P	"	QC2015H
③	20A-3P	"	QC3020H

- NOTES -

1. DOTTED LINES DESIGNATE FIELD WIRING TO BE PERFORMED BY CAR BUILDER.
2. POWER DISTRIBUTION TO SERVICE SUPPLY LINE SHALL BE VERIFIED BY CAR BUILDER.
3. EQUIPMENT INTERNAL SCHEMATICS ARE NOT SHOWN ON THIS DRAWING.
4. ASTERISK (*) INDICATES CIRCUIT BREAKERS NOT FURNISHED BY C.M.P.

REV.	DATE	DESCRIPTION
2	6-20-88	ADDED WIRE MARKERS
1	6-9-88	CHANGED TO 5TH. PANEL

CONTINENTAL METAL PRODUCTS CO. INC.
WORCESTER, MASSACHUSETTS 01606

AMTRAK BUFFET CAR # 8700 - 8704
ELECTRICAL SCHEMATIC

DATE	SCALE	DRAWN BY	DRAWING NO.	REV.
5-20-88	NONE	PLA	D-5861	2

REVISIONS				
LTR	ZONE	DESCRIPTION	DATE	APP'D
A		REMOVED 70A BRKR, ADDED REF DESIGNATIONS	5/11/79	HA
B	ALL	MADE GENERAL CORRECTIONS & RENAMED WIRES.	2/5/80	RFB
	B-2	MOVED 225 A BREAKER.		
	C-5	FS2C2 WAS WIRED TO FS2A2 AT BKR FS2A2 WAS WIRED TO FS2C2 AT BKR		
C		ADDED NEW CAR SERIES TO USED ON BLOCK.	5/16/80 MRB	
D	A2	ADDED PRIMARY & SECONDARY FOOD SERVICE DESIGNATION.	9/3/80 MRB	
	B5	ADDED FOOD PRESERVATION DES		
	D5	STANDBY POWER WAS TRANSFER.		
E		ADDED NEW CAR SERIES.	10/17/80 MRB	
F		ADDED CAR NUMBER SERIES		

SEE POWER DISTRIBUTION DWG NO. D-01-524

FOOD SERVICE PRIMARY

A — FSA
B — FSB
C — FSC
125A

KT

COIL 3 (H4) (H2)(H3) COIL 2 (H1)(H4) (H2)(H3) COIL 1 (H1)

FOOD SERVICE SECONDARY

FS1A — FS1A1
FS1C — FS1B1
FS1B — FS1C1
225 A

(X2) (X4) (X1) (X3)

FOOD SERVICE TRANSFORMER
480 Δ/208 Y/120 VAC - WESTINGHOUSE
3 @ 25 KVA EA : 75 KVA

FSN

FSN
FS1A
FS1B
FS1C
CONTINUED SEE DWG NO. D-04-821
NON VITAL FOOD SERVICE EQUIP.

FSN
FS2A
FS2B
FS2C
CONTINUED SEE DWG NO. D-04-821
FOOD PRESERVATION EQUIP.

FOOD PRESERVATION
50A

FS1A — SC(AUX) (I-N) (I-C) — CN1 — MC (Y) (Z)

SC (Z) (Y) — CSB2 — MC AUX (IC) (N) — CSB1

FS1A — MC (A) (B) — FS2A1 — SC (B) (A) — FS2A2

FS1B — MC (C) (D) — FS2B1 — SC (D) (C) — FS2B2

FS1C — MC (E) (F) — FS2C1 — SC (F) (E) — FS2C2

POWER TRANSFORMER
220/208 Y/120 VAC (I) 15KVA
G.E. # GT2183210

(H1) (H2) (H3)

(X1) (X0) (X2) (X3)

FSN
FS2A3 — FS2A2
FS2B3 — FS2B2
FS2C3 — FS2C2

TRANSFER CONTACTOR-NEMA 2
WESTINGHOUSE A211K2CA

50A STANDBY POWER 50 AMPS

PYLE NATIONAL 100 AMP RECEPTACLE RIGHT SIDE

(3) A
(2) B
(1) C
(R) FS2A2
(4) CSB1

PYLE NATIONAL 100 AMP RECEPTACLE LEFT SIDE

(3)
(2)
(1)
(R)
(4)

	8529-30
	8500-28
QTY/CAR	USED ON

REFERENCE DRAWINGS:

EQUIPMENT ENGINEERING
Amtrak
National Railroad Passenger Corporation

TITLE: SYSTEM SCHEMATIC DIAGRAM (FOOD SERVICE POWER)

DRAWN: Chu 9/29/79 — CHECKED: [illegible] 9/24/79 — APPROVED: [illegible] — APPROVED: [illegible]

SCALE: NONE — DRAWING NO: D-01-538 — REV: F

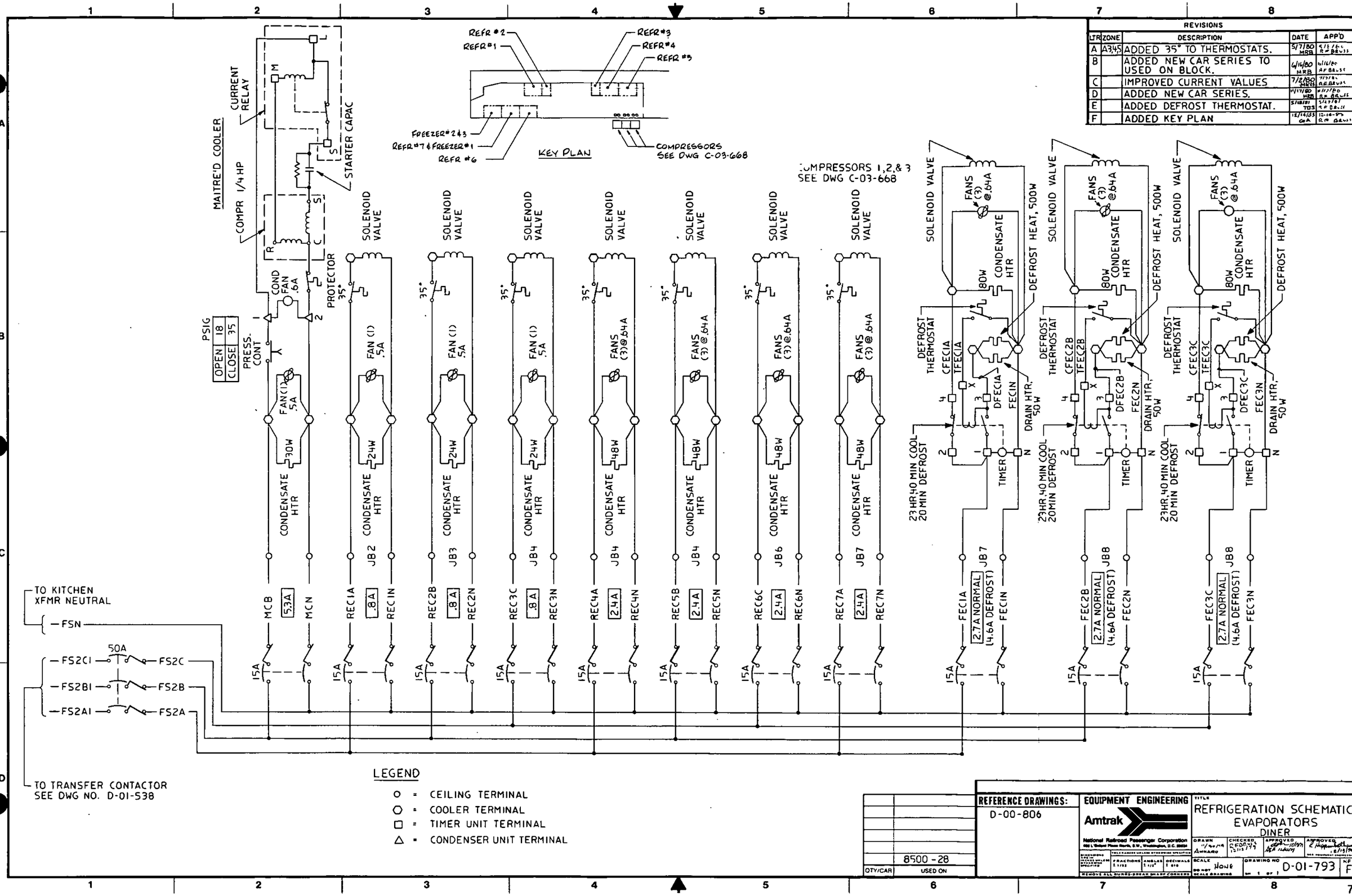

REVISIONS
LTR ZONE DESCRIPTION DATE APP'D
A A3,4,5 ADDED 35° TO THERMOSTATS. 5/7/80 MRB
B ADDED NEW CAR SERIES TO USED ON BLOCK. 6/16/80 MRB
C IMPROVED CURRENT VALUES 7/2/80 MRB
D ADDED NEW CAR SERIES. 11/17/80 MRB
E ADDED DEFROST THERMOSTAT. 5/18/81 TDS
F ADDED KEY PLAN 12/14/83 GA
KEY PLAN
REFR #1
REFR #2
REFR #3
REFR #4
REFR #5
REFR #6
FREEZER #2 & 3
REFR #7 & FREEZER #1
COMPRESSORS SEE DWG C-03-668
MAITRE'D COOLER
COMPR 1/4 HP
CURRENT RELAY
STARTER CAPAC
COND FAN .6A
PROTECTOR 35°
PSIG
OPEN 18
CLOSE 35
PRESS. CONT
SOLENOID VALVE
FAN (1) .5A
FANS (3) @ .64A
CONDENSATE HTR
30W
24W
48W
JB2
JB3
JB4
JB6
JB7
JB8
MCB 5.3A MCN
REC1A .8A REC1N
REC2B .8A REC2N
REC3C .8A REC3N
REC4A 2.4A REC4N
REC5B 2.4A REC5N
REC6C 2.4A REC6N
REC7A 2.4A REC7N
FEC1A 2.7A NORMAL (4.6A DEFROST) FEC1N
FEC2B 2.7A NORMAL (4.6A DEFROST) FEC2N
FEC3C 2.7A NORMAL (4.6A DEFROST) FEC3N
15A
COMPRESSORS 1,2,& 3 SEE DWG C-03-668
DEFROST THERMOSTAT
CFEC1A TFEC1A
CFEC2B TFEC2B
CFEC3C TFEC3C
DFEC1A FEC1N
DFEC2B FEC2N
DFEC3C FEC3N
DRAIN HTR, 50W
DEFROST HEAT, 500W
80W
23 HR, 40 MIN COOL 20 MIN DEFROST
TIMER
TO KITCHEN XFMR NEUTRAL
FSN
50A
FS2C1 FS2C
FS2B1 FS2B
FS2A1 FS2A
TO TRANSFER CONTACTOR SEE DWG NO. D-01-538
LEGEND
○ = CEILING TERMINAL
⬡ = COOLER TERMINAL
□ = TIMER UNIT TERMINAL
△ = CONDENSER UNIT TERMINAL
QTY/CAR 8500-28 USED ON
REFERENCE DRAWINGS: D-00-806
EQUIPMENT ENGINEERING
Amtrak
National Railroad Passenger Corporation
TITLE REFRIGERATION SCHEMATIC EVAPORATORS DINER
DRAWN CHECKED APPROVED APPROVED
SCALE NONE
DRAWING NO D-01-793 REV F

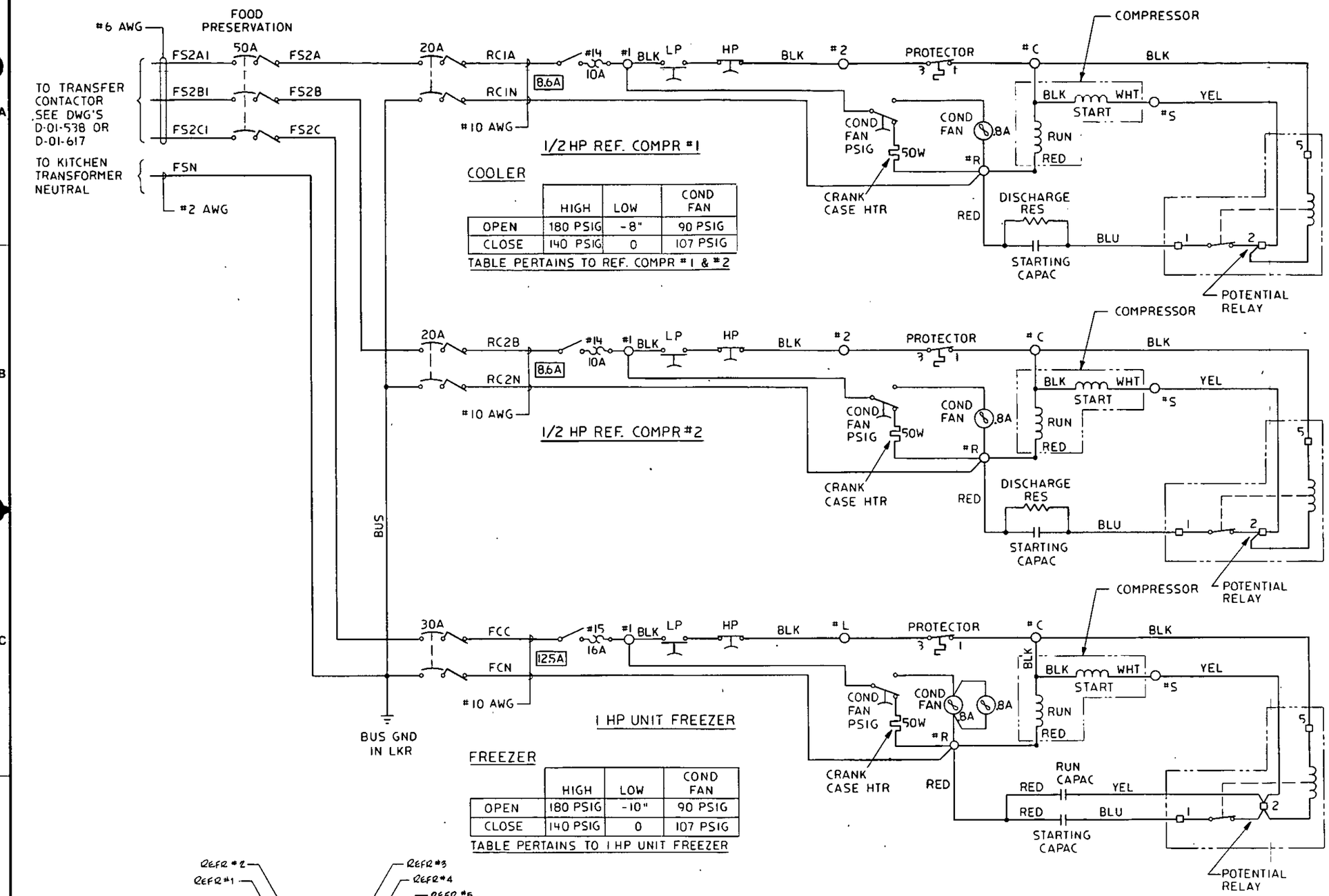

COOLER

	HIGH	LOW	COND FAN
OPEN	180 PSIG	-8"	90 PSIG
CLOSE	140 PSIG	0	107 PSIG

TABLE PERTAINS TO REF. COMPR #1 & #2

FREEZER

	HIGH	LOW	COND FAN
OPEN	180 PSIG	-10"	90 PSIG
CLOSE	140 PSIG	0	107 PSIG

TABLE PERTAINS TO 1 HP UNIT FREEZER

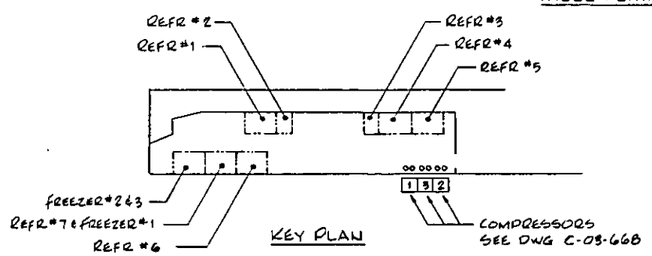

KEY PLAN

REVISIONS

LTR	ZONE	DESCRIPTION	DATE	APP'D
A	B,D4	FOR COOLER & FREEZER: ADDED HIGH CLOSE, COND FAN WAS 110.	5/8/80 MRB	5/8/80 RF BRUSS
B	A-C4	REVERSED PRESSURE SWITCHES	6/4/80 MRB	RF BRUSS 6-6-80
C		ADDED NEW CAR SERIES TO USED ON BLOCK.	6/16/80 MRB	6/16/80 RF BRUSS
D		REFINED CURRENT VALUES.	7/2/80 MRB	7/7/80 RF BRUSS
E		CORRECTED PER C.M.P. DRAWING.	10/21/80 MRB	RF BRUSS 10/21/80
F		ADDED KEY PLAN	12/14/88 GA	RF BRUSS 12-16-88

REFERENCE DRAWINGS:

QTY/CAR	USED ON
	D-00-806(8500-08)

EQUIPMENT ENGINEERING

Amtrak

National Railroad Passenger Corporation

TITLE: REFRIGERATION EQUIPMENT SCHEMATIC COMPRESSOR/CONDENSERS

DRAWN 12/6/79 AWKARD | CHECKED | APPROVED | APPROVED

SCALE NONE | DRAWING NO D-01-794 | REV F

DO NOT SCALE DRAWING

SH 1 OF 1

72

REVISIONS				
LTR	ZONE	DESCRIPTION	DATE	APP'D
A		REFINED CURRENT VALUES. MB	7/3/80	7/3/80 RFBELL
B		CORRECTED PER CMP. DRAWING.	10/21/80 MRB	RF BRUNS
C		ADDED NEW CAR SERIES.	11/17/80 MRB	RF BRUNS 11/17/80
D		ADDED KEY PLAN	12/16/80 GA	RF BRUNS 12-16-80

#6 AWG — FOOD PRESERVATION

TO TRANSFER CONTACTOR SEE DWG'S D-01-538 OR D-01-617

FS2A1 — 50A — FS2A
FS2B1 — FS2B
FS2C1 — FS2C

TO KITCHEN TRANSFORMER NEUTRAL

FSN — #2 AWG

BUS

BUS GND IN LKR

1/2 HP REF. COMPR #1

20A — RC1A — #14 — 10A — 8.6A — #1 BLK — LP — HP — BLK — #2 — PROTECTOR (3, 1) — #C — BLK — COMPRESSOR

RC1N — #10 AWG

COND FAN PSIG — 50W — #R — CRANK CASE HTR

COND FAN — .8A

BLK — WHT — START — #S — YEL

RUN — RED

RED — DISCHARGE RES — STARTING CAPAC — BLU

5 — 1 — 2 — POTENTIAL RELAY

COOLER

	HIGH	LOW	COND FAN
OPEN	180 PSIG	-8"	90 PSIG
CLOSE	140 PSIG	0	107 PSIG

TABLE PERTAINS TO REF. COMPR #1 & #2

1/2 HP REF. COMPR #2

20A — RC2B — #14 — 10A — 8.6A — #1 BLK — LP — HP — BLK — #2 — PROTECTOR (3, 1) — #C — BLK — COMPRESSOR

RC2N — #10 AWG

COND FAN PSIG — 50W — #R — CRANK CASE HTR

COND FAN — .8A

BLK — WHT — START — #S — YEL

RUN — RED

RED — DISCHARGE RES — STARTING CAPAC — BLU

5 — 1 — 2 — POTENTIAL RELAY

1½ HP UNIT FREEZER

30A — FCB — #15 — 11.5A — 7.8A — #1 BLK — LP — HP — BLK — #2 — PROTECTOR (3, 1) — #C — BLK — COMPRESSOR

FCC — #10 AWG

BLK — COND FAN PSIG — 50W — #R — CRANK CASE HTR

COND FAN — .3A — .3A

BLK — BLK — WHT — START — #S — YEL

RUN — RED

RED — RUN CAPAC — YEL

RED — STARTING CAPAC — BLU

5 — 1 — 2 — POTENTIAL RELAY

FREEZER

	HIGH	LOW	COND FAN
OPEN	180 PSIG	-10"	90 PSIG
CLOSE	140 PSIG	0	107 PSIG

TABLE PERTAINS TO 1½ HP UNIT FREEZER

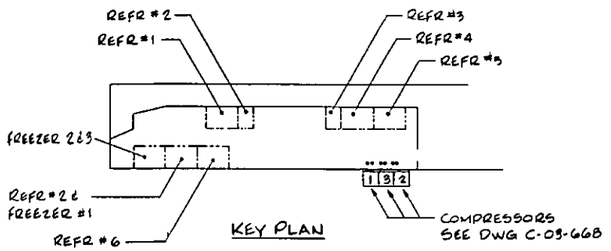

KEY PLAN

COMPRESSORS SEE DWG C-03-668

	8509-8528
QTY/CAR	USED ON

REFERENCE DRAWINGS:

EQUIPMENT ENGINEERING

Amtrak

National Railroad Passenger Corporation

TITLE: REFRIGERATION EQUIPMENT SCHEMATIC COMPRESSOR/CONDENSERS

DRAWN	CHECKED	APPROVED	APPROVED
BROWN 5/18/80	CF BOLLE 6-3-80		

SCALE: NONE — DRAWING NO: D-01-1660 — REV: D

DRAWING NUMBER D-01-795 REV F

REVISIONS				
LTR	ZONE	DESCRIPTION	DATE	APP'D
A	A2,3,4	ADDED 35° TO THERMOSTATS.	5/8/80 MRB	RFBRUSS
B		ADDED NEW CAR SERIES TO USED ON BLOCK.	6/16/80 MRB	6/16/80 RFBRUSS
C		REFINED CURRENT VALUES. CORRECTED WIRE NAMES FEC4B, FEC4N	7/3/80 MRB	7/3/80 RFBRUSS
D	C8	ADDED NOTE.	11/4/80 MRB	11/4/80 [illegible]
E		ADDED DEFROST THERMOSTATS	5/27/81 [illegible]	5/27/81 RFBRUSS
F		ADDED KEY PLAN	12/14/81 GA	12/14/81 RFBRUSS

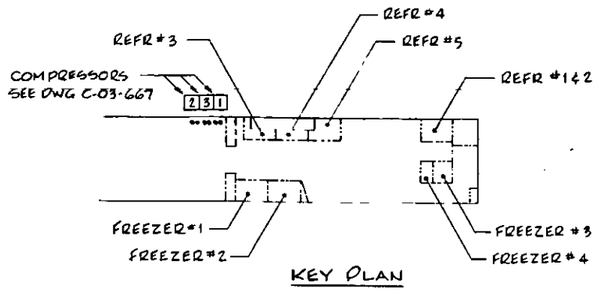

KEY PLAN

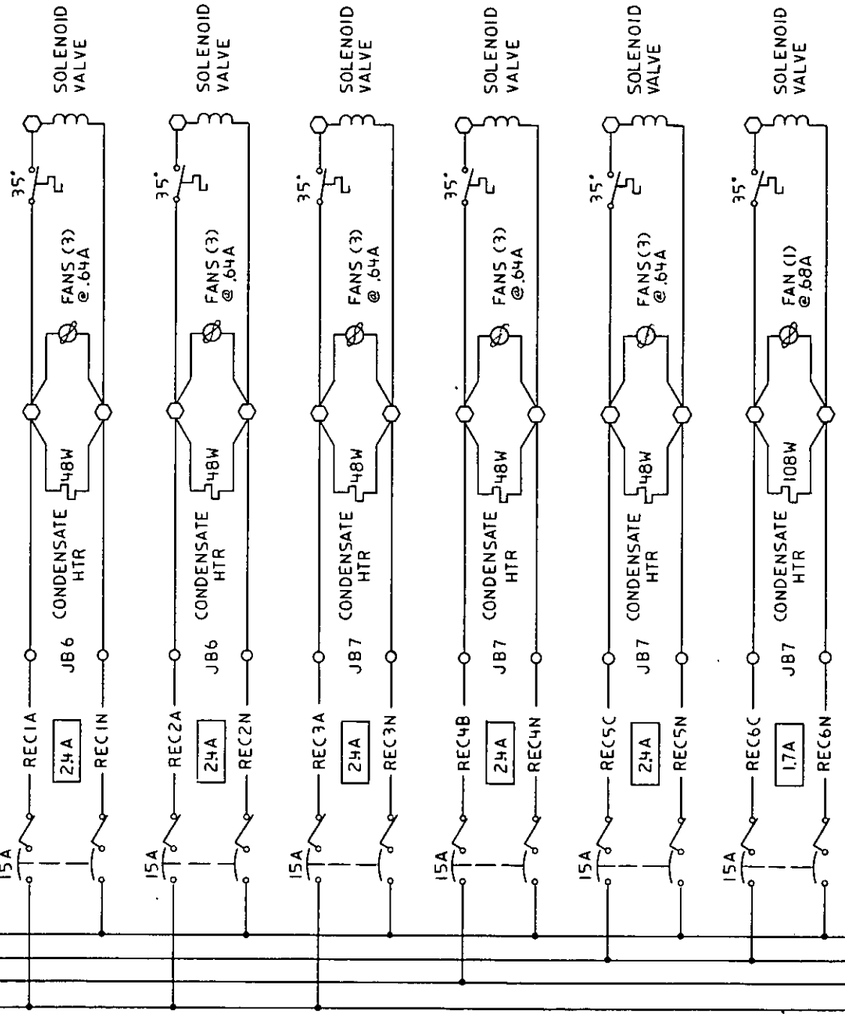

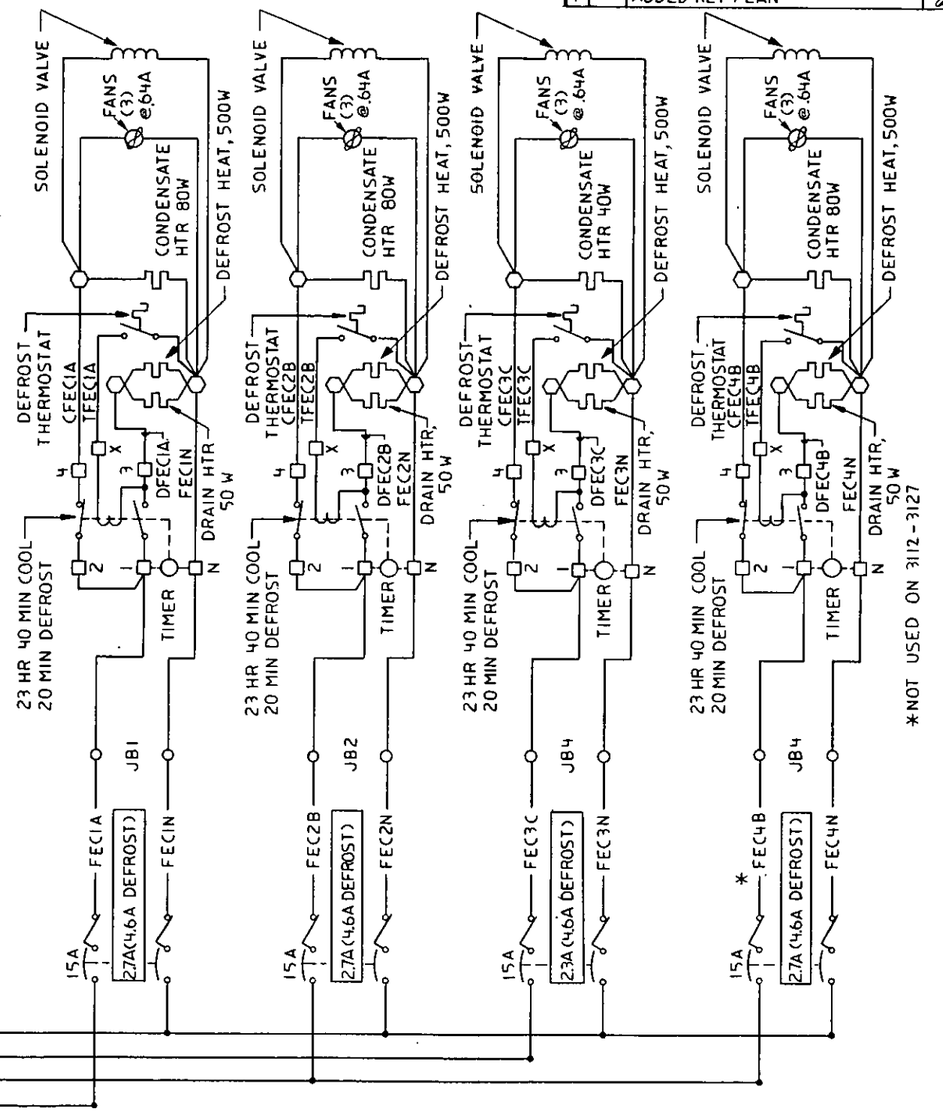

LEGEND

- ○ CEILING TERMINAL BOARD
- □ TIMER TERMINAL BOARD
- ○ COOLER/FREEZER TERMINAL BOARD

QTY/CAR	USED ON
	3113-3127
	(3100-3112)

REFERENCE DRAWINGS:

EQUIPMENT ENGINEERING

Amtrak

National Railroad Passenger Corporation
400 N Capitol St., Washington, D.C. 20001

TITLE: REFRIGERATION SCHEMATIC EVAPORATORS LOUNGE

APP'D FOR ISSUE:

SCALE: N/A

DRAWING NO. D-01-795

REV. F

SH: 1 OF 1

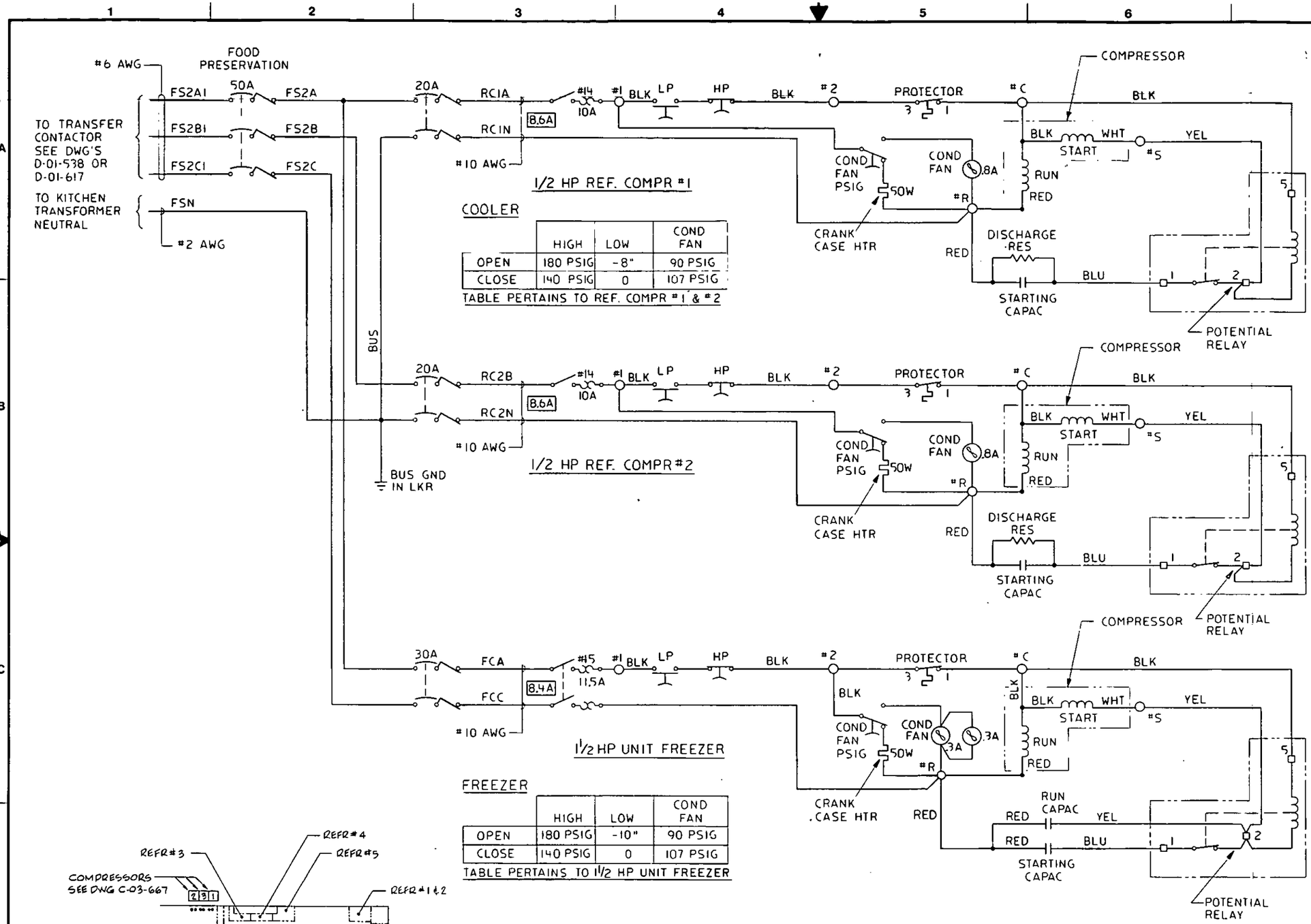

COOLER

	HIGH	LOW	COND FAN
OPEN	180 PSIG	-8"	90 PSIG
CLOSE	140 PSIG	0	107 PSIG

TABLE PERTAINS TO REF. COMPR #1 & #2

FREEZER

	HIGH	LOW	COND FAN
OPEN	180 PSIG	-10"	90 PSIG
CLOSE	140 PSIG	0	107 PSIG

TABLE PERTAINS TO 1 1/2 HP UNIT FREEZER

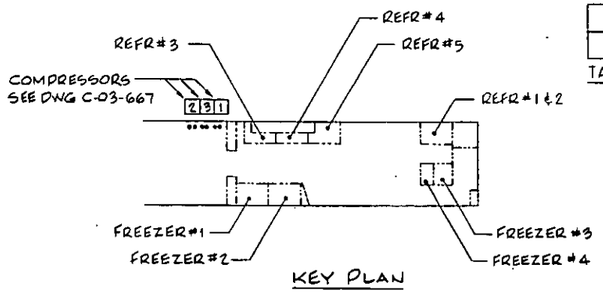

KEY PLAN

REVISIONS

LTR	ZONE	DESCRIPTION	DATE	APP'D
A		ADDED NEW CAR SERIES TO USED ON BLOCK.	6/16/80 MRB	6/16/80 RF BRUSS
B		REFINED CURRENT VALUES. MKB	7/3/80	7/3/80 RF BRUSS
C		CORRECTED PER C.M.P. DRAWING	10/21/80 MKB	R#3
D		ADDED KEY PLAN	12/14/83 GWA	12-14-83 R# BRUSS

REFERENCE DRAWINGS:

QTY/CAR	USED ON
	3113-3127
	D-00-804(3100-12)

EQUIPMENT ENGINEERING
Amtrak
National Railroad Passenger Corporation

TITLE: REFRIGERATION EQUIPMENT SCHEMATIC COMPRESSOR/CONDENSERS

DRAWN: BROWN 5/8/80 | CHECKED: CF BRUSS 6-3-80 | APPROVED: 6-4-80 | APPROVED: 3/4/80

SCALE: NONE | DRAWING NO: D-01-796 | REV: D

DO NOT SCALE DRAWING | SH 1 OF 1

REMOVE ALL BURRS BREAK SHARP CORNERS

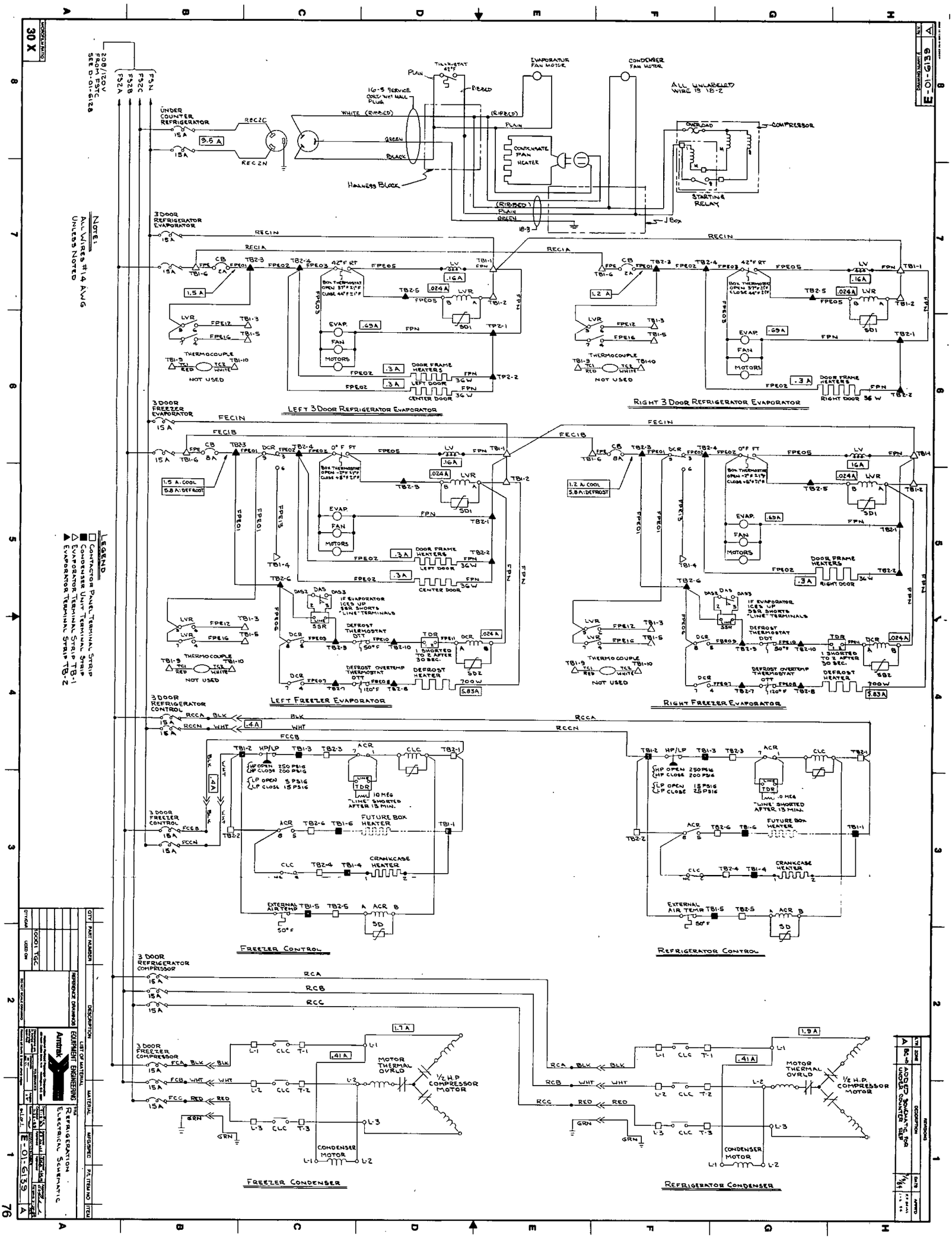

30 X
E-01-6139 A
208/120V FROM FSTC SEE D-01-6128
FSN
FS2A
FS2B
FS2C
FS2N
UNDER COUNTER REFRIGERATOR
REC2C
REC2N
16-3 SERVICE CORD WHT HALL PLUG
WHITE (RIBBED)
GREEN
BLACK
HARNESS BLOCK
PLAIN
RIBBED
EVAPORATOR FAN MOTOR
CONDENSER FAN MOTOR
ALL UNLABELED WIRE IS 18-2
CONDENSATE PAN HEATER
OVERLOAD
COMPRESSOR
STARTING RELAY
J BOX
3 DOOR REFRIGERATOR EVAPORATOR
RECIN
RECIA
LEFT 3 DOOR REFRIGERATOR EVAPORATOR
RIGHT 3 DOOR REFRIGERATOR EVAPORATOR
THERMOCOUPLE
NOT USED
DOOR FRAME HEATERS
LEFT DOOR
CENTER DOOR
RIGHT DOOR
3 DOOR FREEZER EVAPORATOR
FECIN
FECIB
LEFT FREEZER EVAPORATOR
RIGHT FREEZER EVAPORATOR
DEFROST THERMOSTAT
DEFROST OVERTEMP THERMOSTAT
DEFROST HEATER
3 DOOR REFRIGERATOR CONTROL
RCCA
RCCN
FCCB
FREEZER CONTROL
REFRIGERATOR CONTROL
FUTURE BOX HEATER
CRANKCASE HEATER
EXTERNAL AIR TEMP
3 DOOR REFRIGERATOR COMPRESSOR
3 DOOR FREEZER COMPRESSOR
MOTOR THERMAL OVRLD
1/2 H.P. COMPRESSOR MOTOR
CONDENSER MOTOR
FREEZER CONDENSER
REFRIGERATOR CONDENSER
NOTE: ALL WIRES #14 AWG UNLESS NOTED
LEGEND
CONTACTOR PANEL TERMINAL STRIP
CONDENSER UNIT TERMINAL STRIP
EVAPORATOR TERMINAL STRIP TB-1
EVAPORATOR TERMINAL STRIP TB-2
ADDED SCHEMATIC FOR UNDER COUNTER REF
REFRIGERATION ELECTRICAL SCHEMATIC
EQUIPMENT ENGINEERING
Amtrak
E-01-6139 A

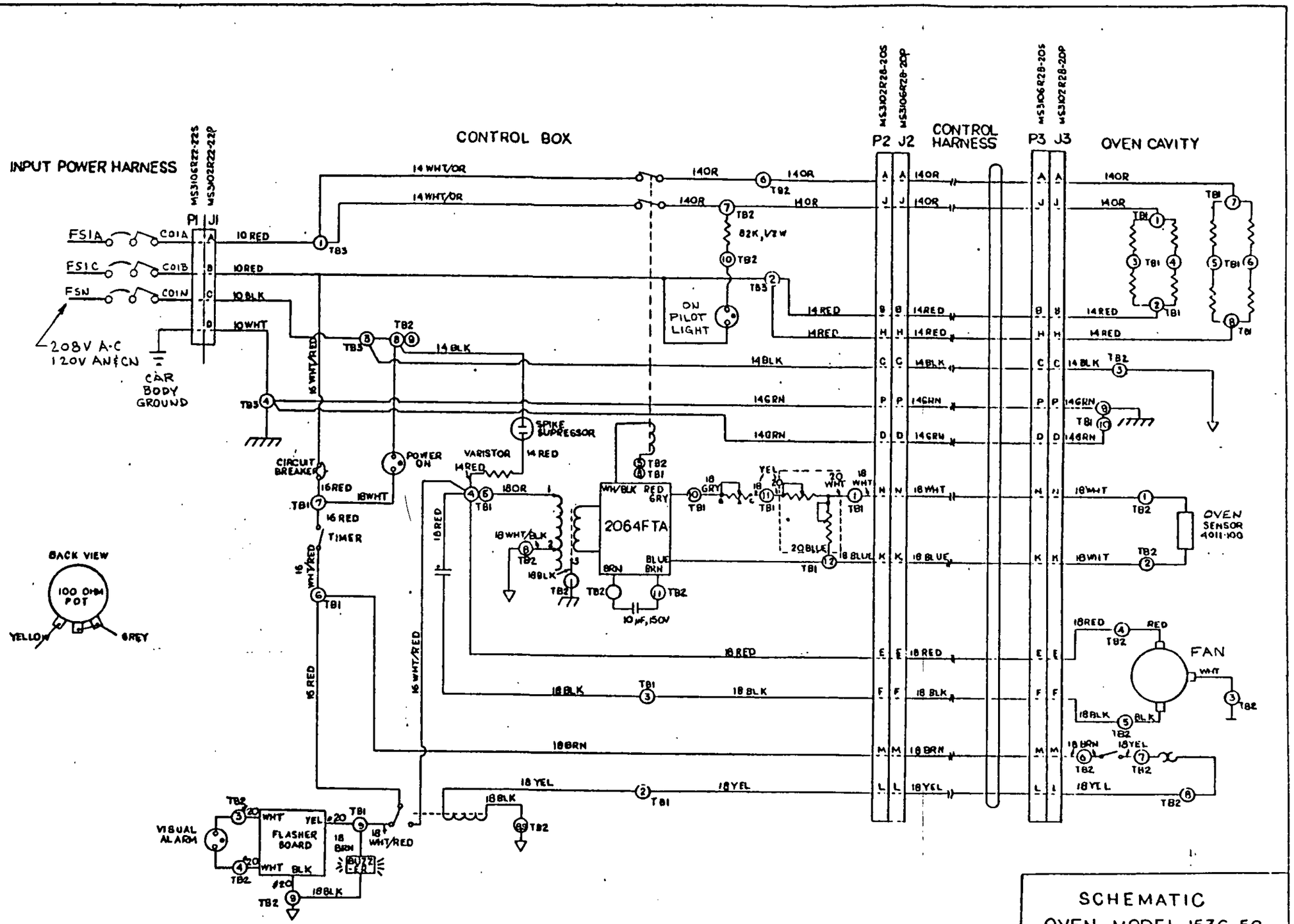

SCHEMATIC
OVEN MODEL 1536-5C

USED ON 3100-3111 | 14776 | 300-901 | 2

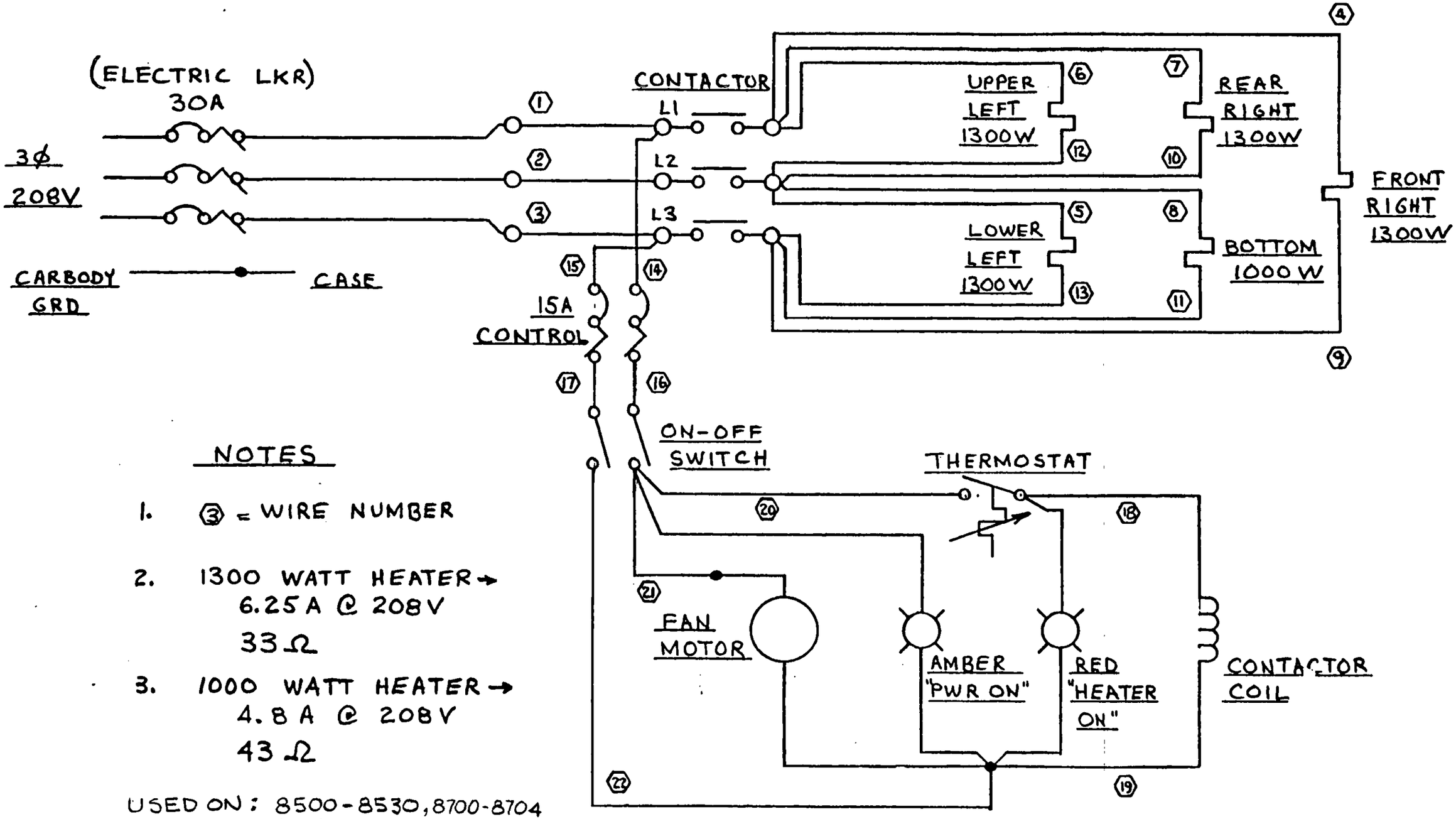

NOTES

1. ③ = WIRE NUMBER
2. 1300 WATT HEATER → 6.25 A @ 208V 33 Ω
3. 1000 WATT HEATER → 4.8 A @ 208V 43 Ω

USED ON: 8500-8530, 8700-8704
3112 - 3127

ELECTRICAL SCHEMATIC - MARKET FORGE - 2200

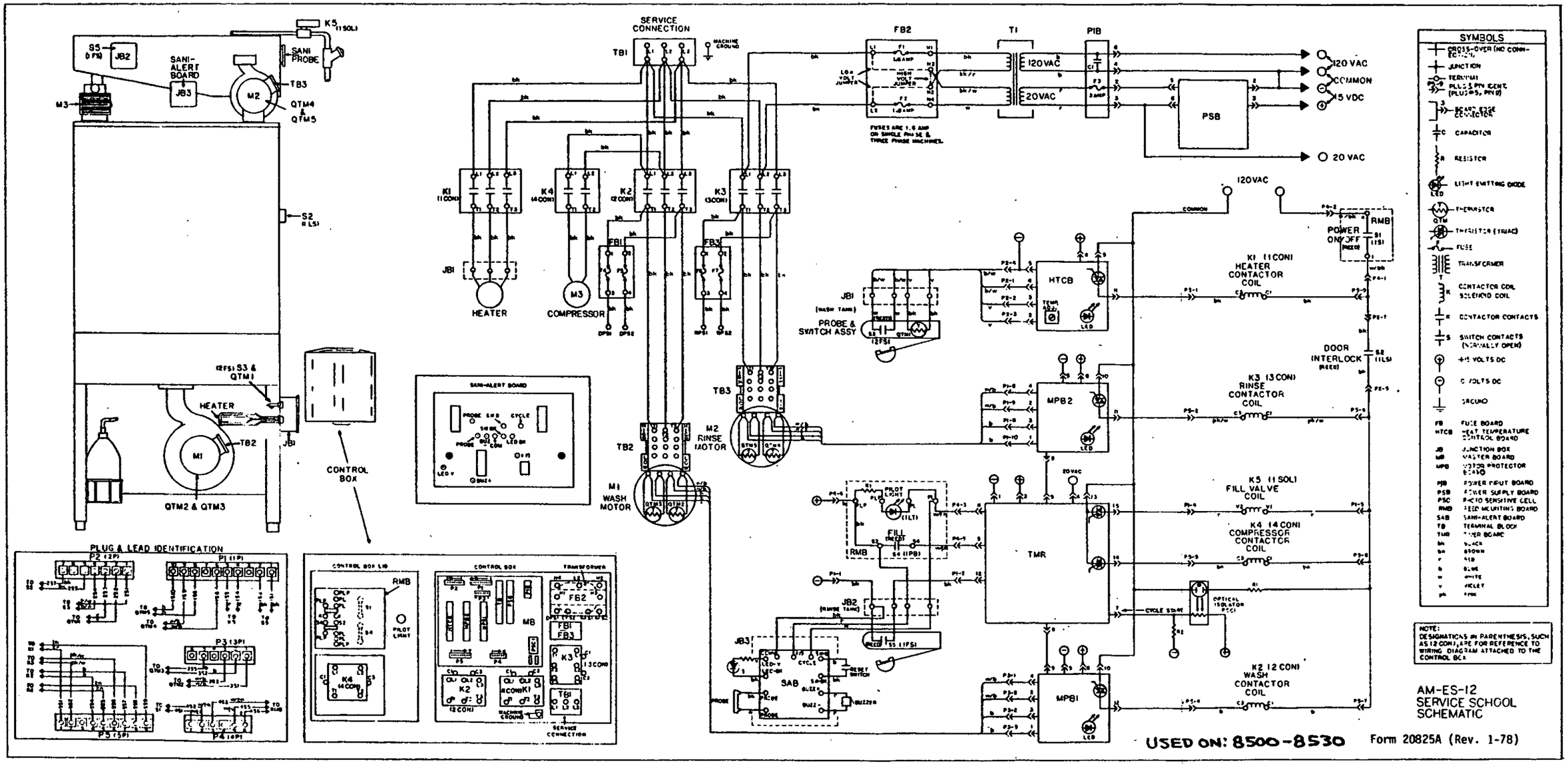
SERVICE CONNECTION
TB1
FB2
T1
P1B
120VAC
20VAC
PSB
120 VAC
COMMON
15 VDC
20 VAC
K1 (1CON)
K4 (4CON)
K2 (2CON)
K3 (3CON)
JB1
HEATER
COMPRESSOR
FB1
FB3
TB3
M2 RINSE MOTOR
TB2
M1 WASH MOTOR
PROBE & SWITCH ASSY
HTCB
MPB2
TMR
MPB1
RMB
POWER ON/OFF
K1 (1CON) HEATER CONTACTOR COIL
DOOR INTERLOCK
K3 (3CON) RINSE CONTACTOR COIL
K5 (1SOL) FILL VALVE COIL
K4 (4CON) COMPRESSOR CONTACTOR COIL
K2 (2CON) WASH CONTACTOR COIL
SAB
FILL
CONTROL BOX
SANI-ALERT BOARD
PLUG & LEAD IDENTIFICATION
SYMBOLS
NOTE: DESIGNATIONS IN PARENTHESIS, SUCH AS 12 CON), ARE FOR REFERENCE TO WIRING DIAGRAM ATTACHED TO THE CONTROL BOX
AM-ES-12
SERVICE SCHOOL
SCHEMATIC
USED ON: 8500-8530
Form 20825A (Rev. 1-78)

8L9-10-D

BASIC WATER COOLER (BUILT-UP)

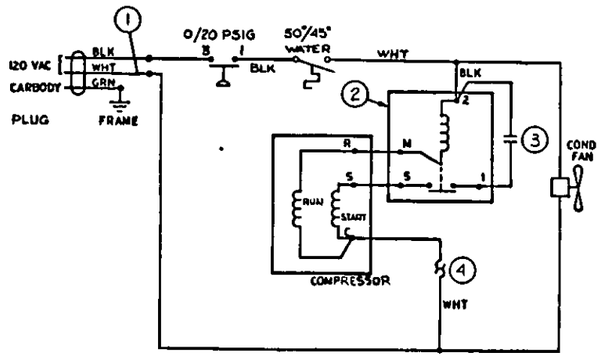

COMP	CURRENT	RELAY	CAPACITOR	OVERLOAD	RESISTANCE	
					S-C	R-S
AE3414A	2.9	P82654	NONE-JUMPER PIN 1 TO 2	P83601	10-17	14-21
AE4430A	5.0	P82928	243-292 MFD @ 110 VAC	P83940	3-7	5-8
AJ4461A	9.1	P82481-1	235-282 MFD @ 165 VAC	P83991-1	3-6	3-7

USED ON ALL CARS EXCEPT SLEEPERS &4600 COACHES

BASIC WATER COOLER WITH CIRCULATION PUMP (BUILT-UP)

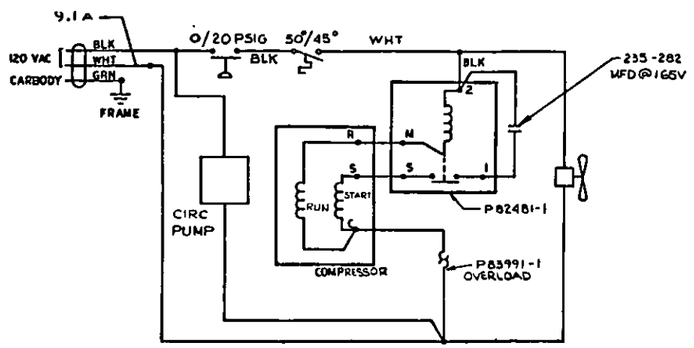

AJ 4461 A [S-C 3-6Ω, R-S 3-7Ω] WARM

USED ON 10-6 SLEEPERS

BASIC WATER COOLER WITH BOTTLE COOLER (BUILT-UP)

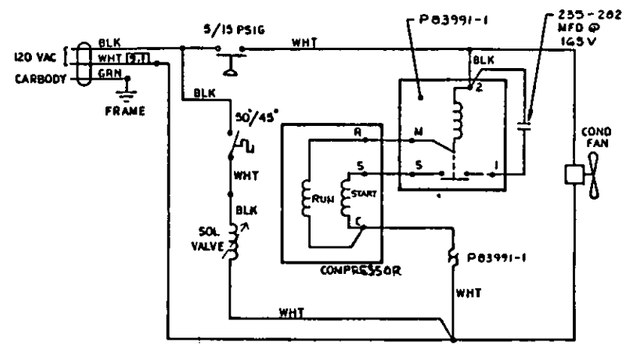

AJ 4461 [S-C 3-6Ω, R-S 3-7Ω] WARM

USED ON 4600 COACHES

SUNROC RPR-3/PS WATER COOLER

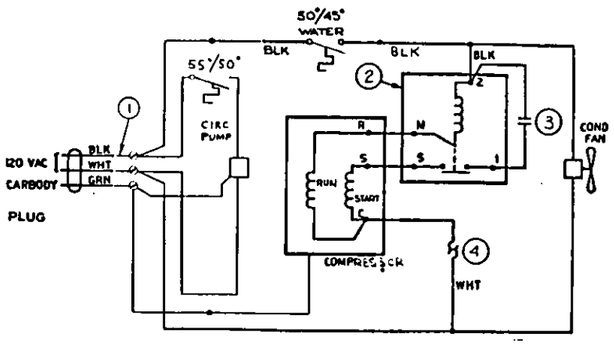

COMP	CURRENT	RELAY	CAPACITOR	OVERLOAD	RESISTANCE	
					S-C	R-S
AE4430A	5.0	P82928	243-292 MFD @ 110 VAC	P83940	3-7	5-8

USED ON 10-6 & 11DB SLEEPERS
REPLACEMENT

SUNROC TT5A WATER COOLER

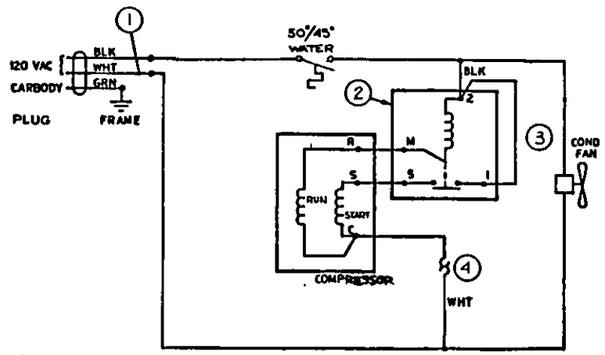

COMP	CURRENT	RELAY	CAPACITOR	OVERLOAD	RESISTANCE	
					S-C	R-S
AE3414A	2.9	P82654	NONE-JUMPER PIN 1 TO 2	P83601	10-17	14-21

USED ON NON-SLEEPERS
REPLACEMENT

QTY	PART NUMBER	DESCRIPTION	MATERIAL	MFG SPEC	P.L. ITEM NO	ITEM

LIST OF MATERIAL

QTY CAR	USED ON
	1610-9411

REFERENCE DRAWINGS

EQUIPMENT ENGINEERING
Amtrak

TITLE: WATER COOLER SCHEMATICS

D-01-679

24 X

80

REVISIONS				
LTR	ZONE	DESCRIPTION	DATE	APP'D
A		REDESIGNED & REDRAWN.	4/29/79	RF Bruss 11/12/79
B		UPDATED CAR NO., CHANGED THERMO TO 2 POLE. MEB	10/13/80	RF Bruss 10/16/80
C		5000 SERIES WIRING WAS B-END, RIGHT FOR IHWA, IHWB. MEB	11/13/80	RF Bruss 11/12/80

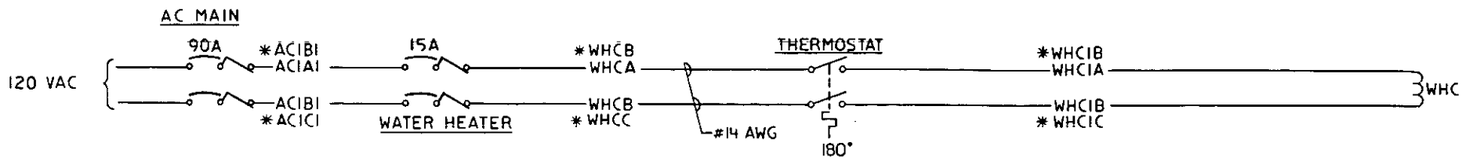

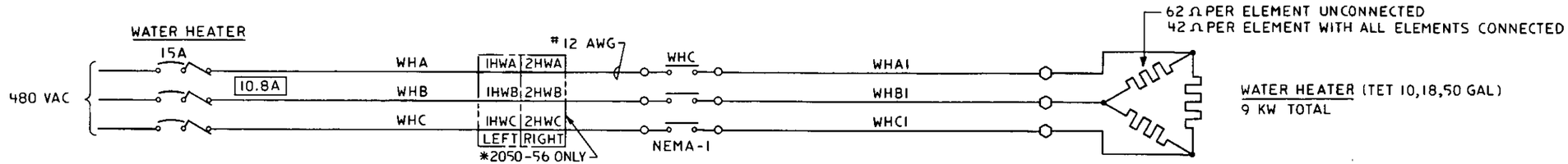

REF. DWG D-03-616

HEATER SIZE IN GAL.	QTY REQD	CAR NO.
18	1	1614-17
18	1	1622-25
10	2	2050-56*
18	1	2080-95
18	1	2430-82
18	1	2871-79
18	1	2895-96
50	1	8500-26

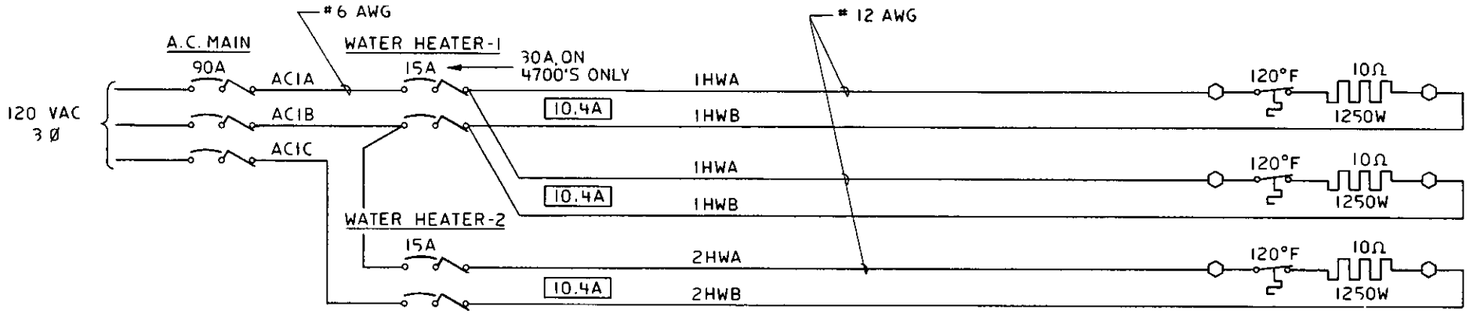

TET-1 GAL. HEATERS		WIRING LOCATIONS IN CAR	
CAR NO.	QTY REQD	IHWA, IHWB	2HWB, 2HWC
1622-25	2	B-END, RIGHT	B-END, LEFT
3100-27	1	FOOD SERVICE	——
4000-26	2	B-END, LEFT	A-END, LEFT
4600-50	2	B-END, RIGHT	A-END, LEFT
4700-39	3	A-END, L & R	B-END, RIGHT
4740-42	2	B-END, RIGHT	A-END, LEFT
5000-08	2	B-END, LEFT	A-END, LEFT
7000-07	2	B-END, LEFT	A-END, RIGHT
7600-18	2	B-END, RIGHT	B-END, LEFT

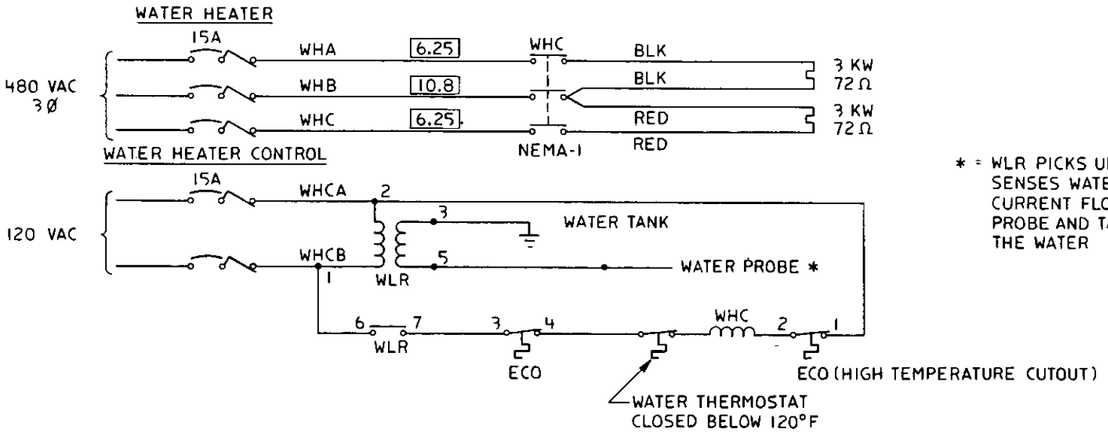

* = WLR PICKS UP WHEN PROBE SENSES WATER IN TANK AND CURRENT FLOWS BETWEEN PROBE AND TANK THROUGH THE WATER

HATCO USED ON
1610-13, 2880-94

QTY/CAR	USED ON	QTY/CAR	USED ON
			4000-26
			3100-27
	8500-26		2871-96
	7600-18		2430-82
	7000-07		2080-97
	5000-08		2050-56
	4700-42		1622-25
	4600-50		1610-17

REFERENCE DRAWINGS:

EQUIPMENT ENGINEERING
Amtrak
National Railroad Passenger Corporation

TITLE: WIRING DIAGRAM WATER HEATER

DRAWN 4/10/79 AWKARD | CHECKED RF Bruss 4-10-79 | APPROVED | APPROVED

SCALE NONE | DRAWING NO. D-04-752 C | SH. 1 OF 1

REVISIONS				
LTR	ZONE	DESCRIPTION	DATE	APPR'D

DRAWING NUMBER C-04-7102 REV.

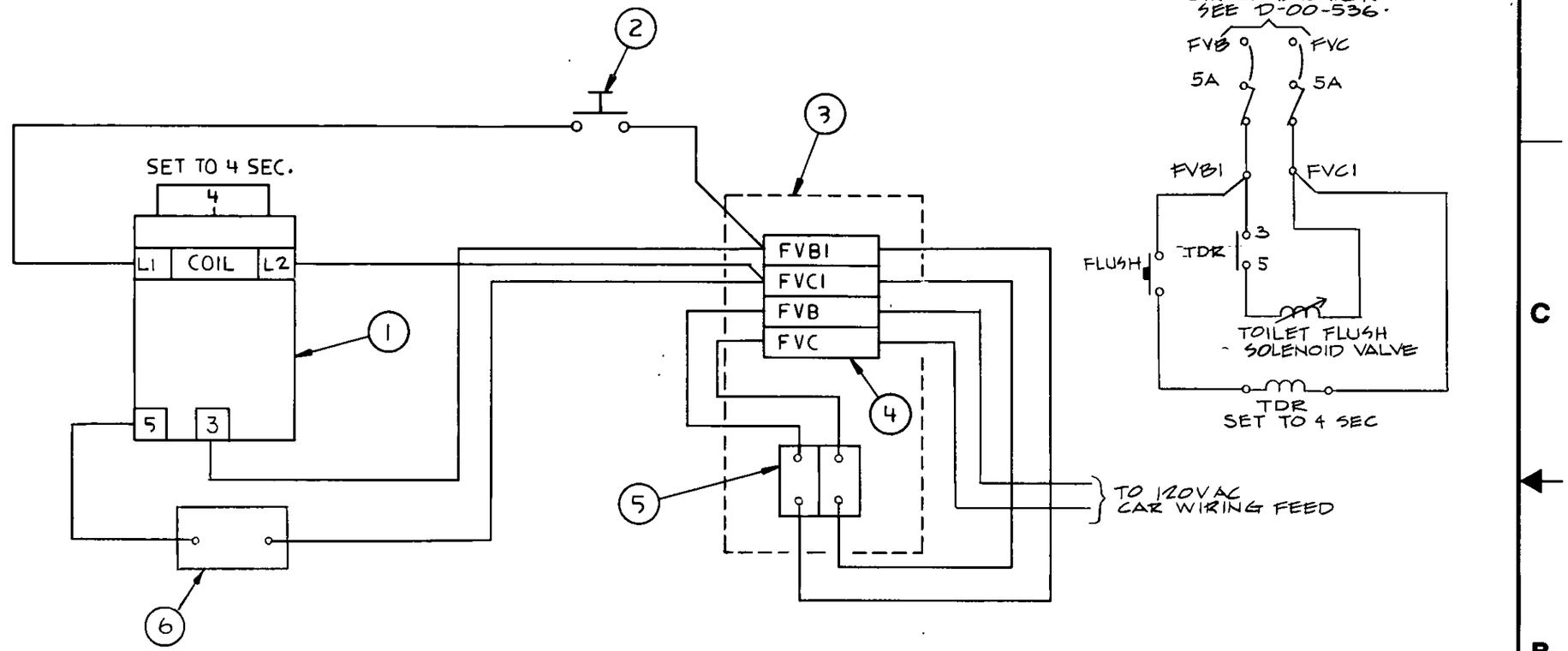

AMMS NO.	QTY	PART NUMBER	DESCRIPTION	MATERIAL	MFG/SPEC	P/L ITEM NO	ITEM
2492504115	1		VALVE, FLUSH, SOLENOID	17790686	VAPOR		6
2404508811	2		CIRCUIT BREAKER, 5A	772725	KLIXON		5
2542105703	4		TERMINAL BLOCK,	1492 SERIES	ALLEN-BRADLEY		4
——	1		BRACKET, MOUNTING	BG SHOPS			3
2492523869	1		PUSHBUTTON SWITCH				2
253000880X	1		TIME DELAY RELAY, 5-50 SEC. DELAY ON DROPOUT	7022 AD	AGASTAT		1

LIST OF MATERIAL

QTY/CAR: 2050-2896 — USED ON

REFERENCE DRAWINGS

DO NOT SCALE DRAWING

EQUIPMENT ENGINEERING

Amtrak

National Railroad Passenger Corporation
400 North Capitol Street, N.W. Washington, D.C. 20001

TITLE: TOILET FLUSH VALVE WIRING

Drawn DWB 12-5-83 | Checked | Approved | Approved DENIUS | Approved G.P. Rohrer For Issue 2-24-84

Dimensions are in inches unless otherwise specified. TOLERANCES: Decimals XX +/- —— XXX +/- ——; Angles ± ½°

Remove all burrs & break sharp edges.

Scale ~ SH 1 OF 1

DRAWING NUMBER C-04-669 REV

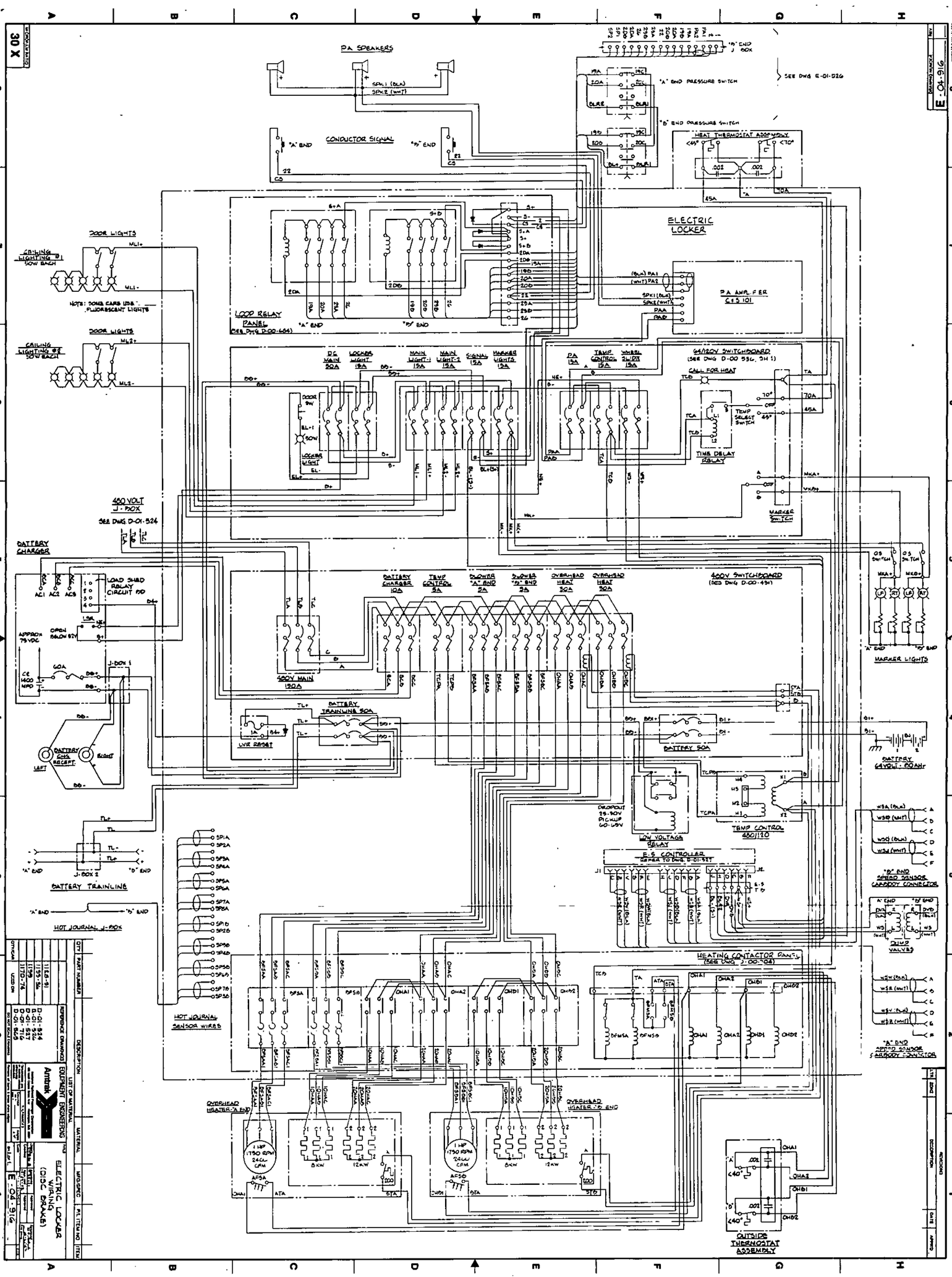

E-04-516

ELECTRIC LOCKER WIRING (DISC BRAKE)

Amtrak

83

REVISIONS				
LTR	ZONE	DESCRIPTION	DATE	APP'D
A		ADDED NEW CAR SERIES		
B		ADDED NEW CAR SERIES.		
C		ADDED NEW CAR SERIES		R F BRUSS

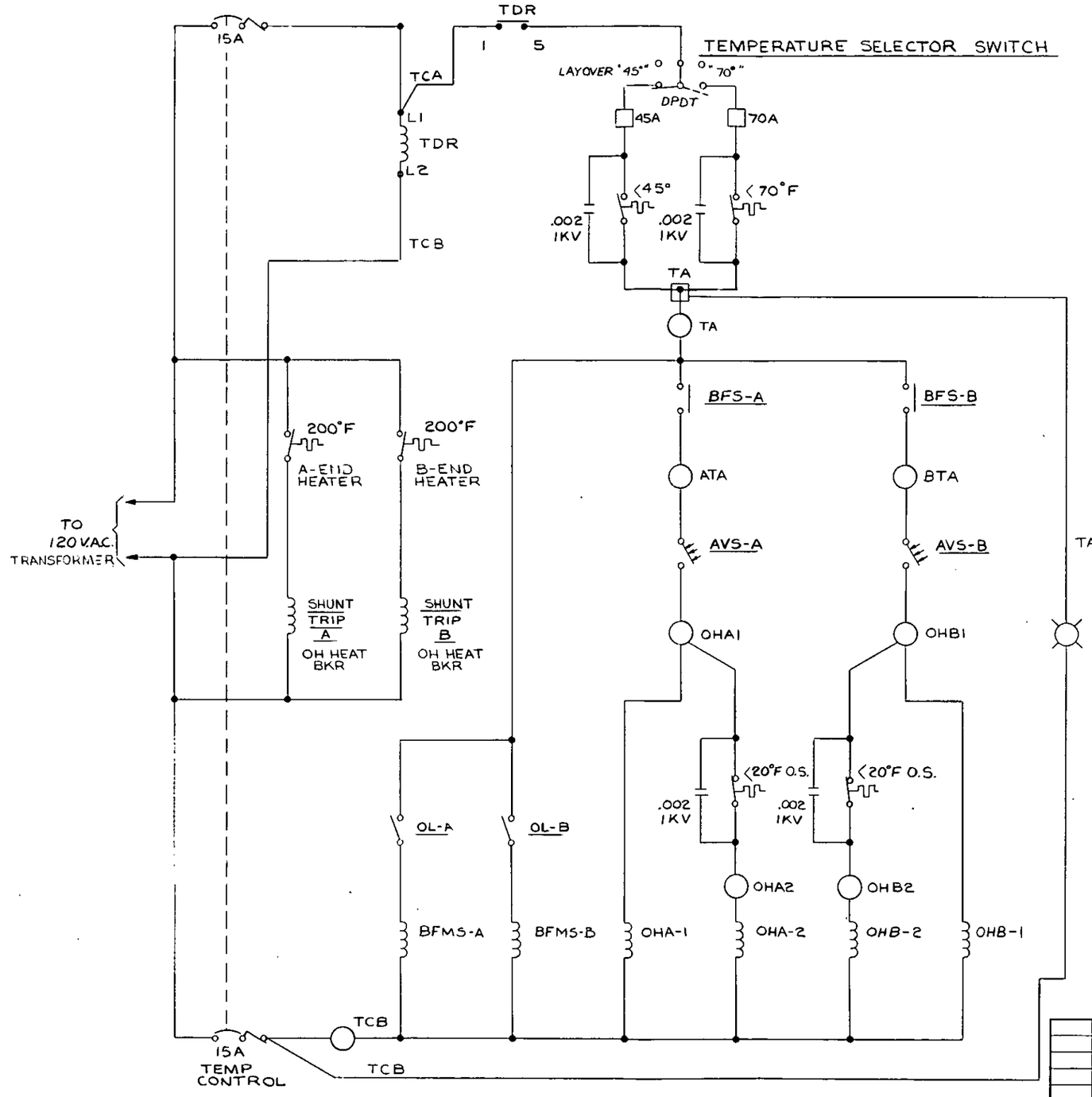

	1203 72
	1126-92
QTY/CAR	USED ON

REFERENCE DRAWINGS:
D-00-800

EQUIPMENT ENGINEERING
Amtrak
National RailRoad Passenger Corporation

TITLE: TEMPERATURE CONTROL SCHEMATIC

DRAWN	CHECKED	APPROVED	APPROVED
SOS&EE 1-19-79	4/14/79		

SCALE: NONE
DRAWING NO: D-01-565
REV: C

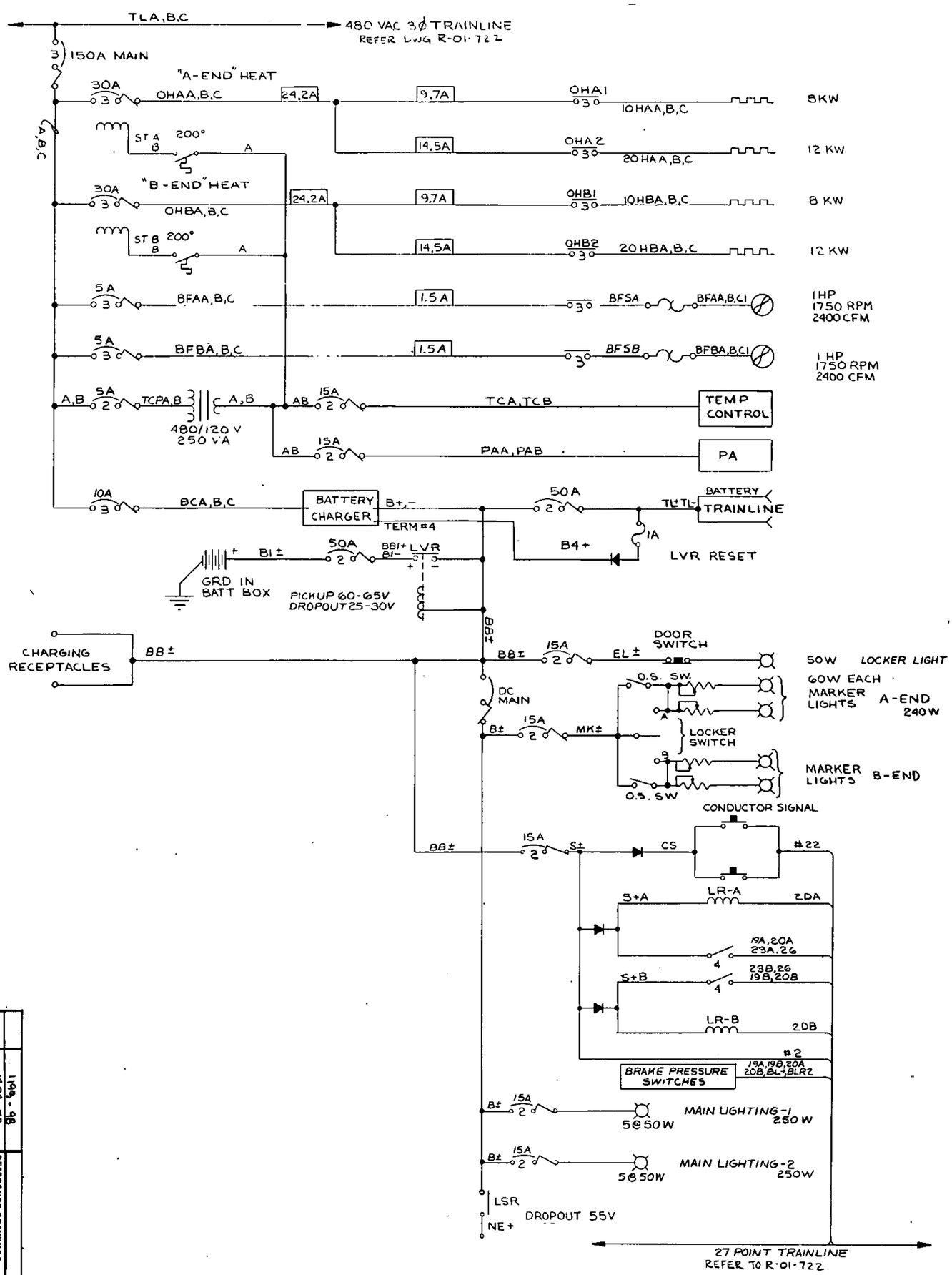

QTY/CAR	USED ON
	1199-98
	1209-72
	1175-92
	1140-69
	1137-38
	1132
	1126-27

REFERENCE DRAWINGS:

EQUIPMENT ENGINEERING

Amtrak

National Railroad Passenger Corporation

TITLE: SINGLE LINE POWER SCHEMATIC BAGGAGE CARS

DRAWN: DOBRE 1-22-79

CHECKED: 1-22-79

APPROVED: 1-22-79

APPROVED: 1-22-79

SCALE: NONE

DRAWING NO: D-01-716

REV: E

LTR	ZONE	REVISIONS DESCRIPTION	DATE	APP'D
A		RECORD CHANGE	1/16/80	R F BRUSS
B		ADDED NEW CAR SERIES.	11/17/80	R F BRUSS
C		ADDED DECELOSTAT & NEW CAR SERIES	10/16/80	R F BRUSS
D		DELETED DECELOSTAT (SHOWN ON DWG D-01-1710), CNGD CAR NO.	1-27-83	R F BRUSS
		ADDED NEW CAR SERIES	3/18/84	R F BRUSS

85

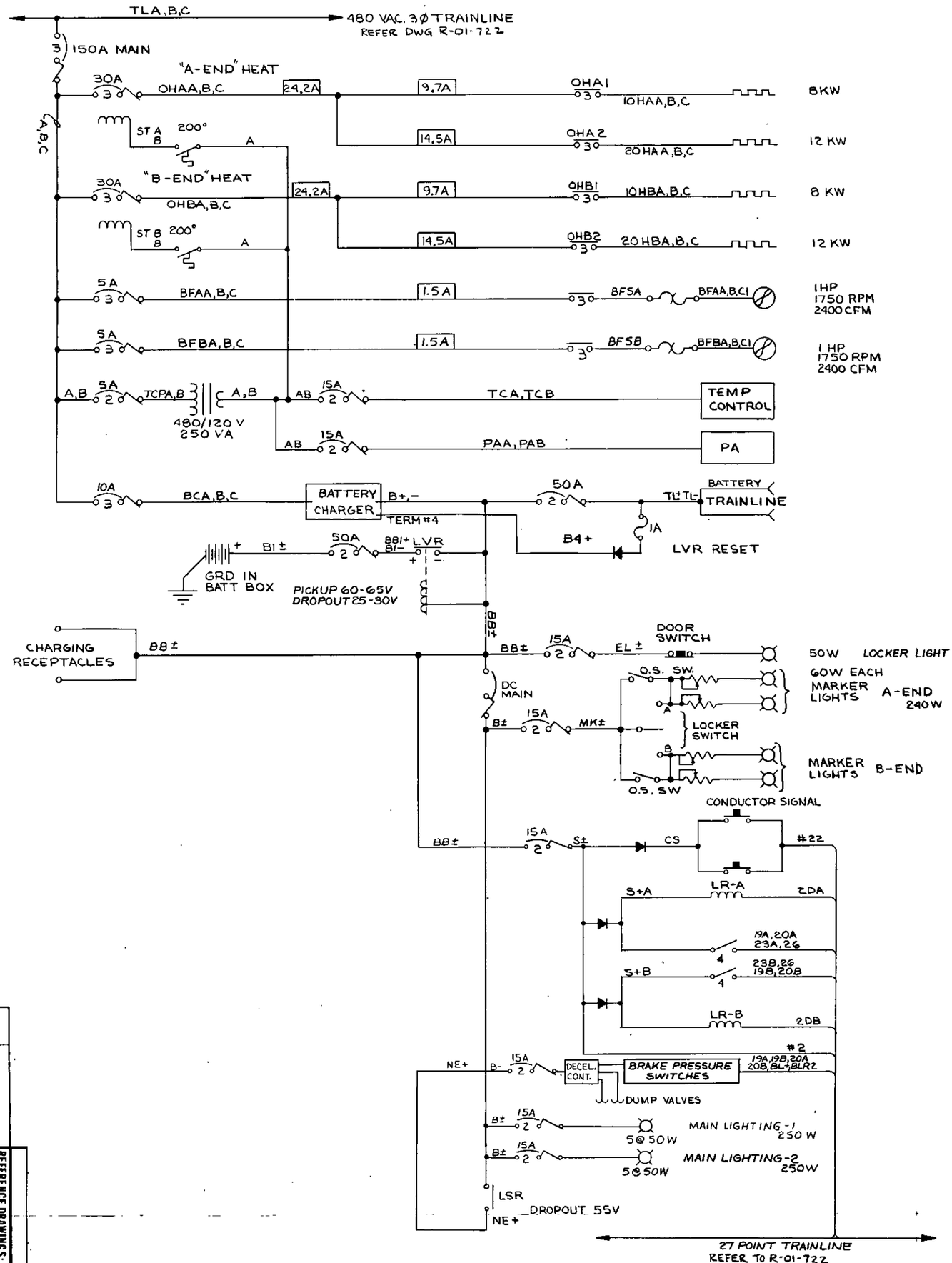

DTY/CAR	USED ON
	1170-77
	1139
	1133-36
	1128-31

REFERENCE DRAWINGS:

EQUIPMENT ENGINEERING

Amtrak

National Railroad Passenger Corporation

DRAWN: BROWN 11/27/78

CHECKED: R. BRUSS 11/27/78

APPROVED

APPROVED: 11/27/78

TITLE: SINGLE LINE POWER SCHEMATIC BAGGAGE CARS

SCALE: NONE

DRAWING NO. D-01-1710

SHEET NO. 1 OF 1

LTR	ZONE	DESCRIPTION	DATE	APP'D

REVISIONS

REVISIONS				
LTR	ZONE	DESCRIPTION	DATE	APP'D
A		ADDED SPKR LOCATION DIAGRAM	2-4-75	
B		ADDED NEW CAR SERIES.	11/19/80 MRB	RF BAUES 11/19/80
C		ADDED NEW CAR SERIES.	8/8/84 CD	RF BAUES

BAGGAGE AREA SPEAKERS

SPK1 SPK2 SPKR 3

BELDEN 8471
SPK1 } BLK
SPK2 } WHT

PA AMPLIFIER C&S 101

PA1 BLK 1
PA2 WHT 2
3
SPK1 BLK 4
SPK2 WHT 5
PAA 6
PAB 7

#12
PAA
PAB
PA CIRCUIT BREAKER

FLOOR LINE

1 3 4 5 6 7 8 9 10 24 25
27 POINT RECEPTACLE
RIGHT SIDE

BELDEN 8719
PA1
PA2

1 3 4 5 6 7 8 9 10 24 25
27 POINT RECEPTACLE
RIGHT SIDE

TB1 TB2

SHD
PA1
PA2
PA3
PA4
PA5
PA6
RA1
RA2
PA7
PA8

PA1(BLK)
PA2(CLR)
PA3(BLK)
PA4(CLR)
PA5(BLK)
PA6(CLR)
RA1 (BLK)
RA2(CLR)
PA7(BLK)
PA8(CLR)

"A" END

"B" END

LOCATED IN 'A' END T/L JUNCTION BOX

BELDEN 8720
5 PAIRS

LOCATED IN 'B' END T/L JUNCTION BOX

25 24 10 9 8 7 6 5 4 3 1
27 POINT RECEPTACLE
LEFT SIDE

25 24 10 9 8 7 6 5 4 3 1
27 POINT RECEPTACLE
LEFT SIDE

TRAINLINE WIRE FUNCTIONS	
WIRE CODE	FUNCTION
PA1 } PA2 }	CALL P.A. AND TAPE MUSIC #1
PA3 } PA4 }	CALL INTERCOM
PA5 } PA6 }	P.A. CONTROL
RA1 } RA2 }	RADIO (FUTURE USE)
PA7 } PA8 }	TAPE MUSIC #2 (FUTURE USE)

QTY/CAR	USED ON
	1175-98
	1610-37
	1126-74

B-END

ELECT. LKR.
PA. AMPL
PA. AMPL. LOCATED IN ELECTRIC LOCKER
BAGGAGE CAR
SPEAKER (TYP)
BAGGAGE DORMITORY
A-END

SPEAKER LOCATIONS

REFERENCE DRAWINGS:
D-00-800
D-00-801

EQUIPMENT ENGINEERING
Amtrak
National Railroad Passenger Corporation

TITLE
PUBLIC ADDRESS WIRING DIAGRAM
BAGGAGE DORM & BAGGAGE CARS

DRAWN Sansare 3-1-79 | CHECKED | APPROVED | APPROVED
SCALE NONE | DRAWING NO D-04-745 | REV C

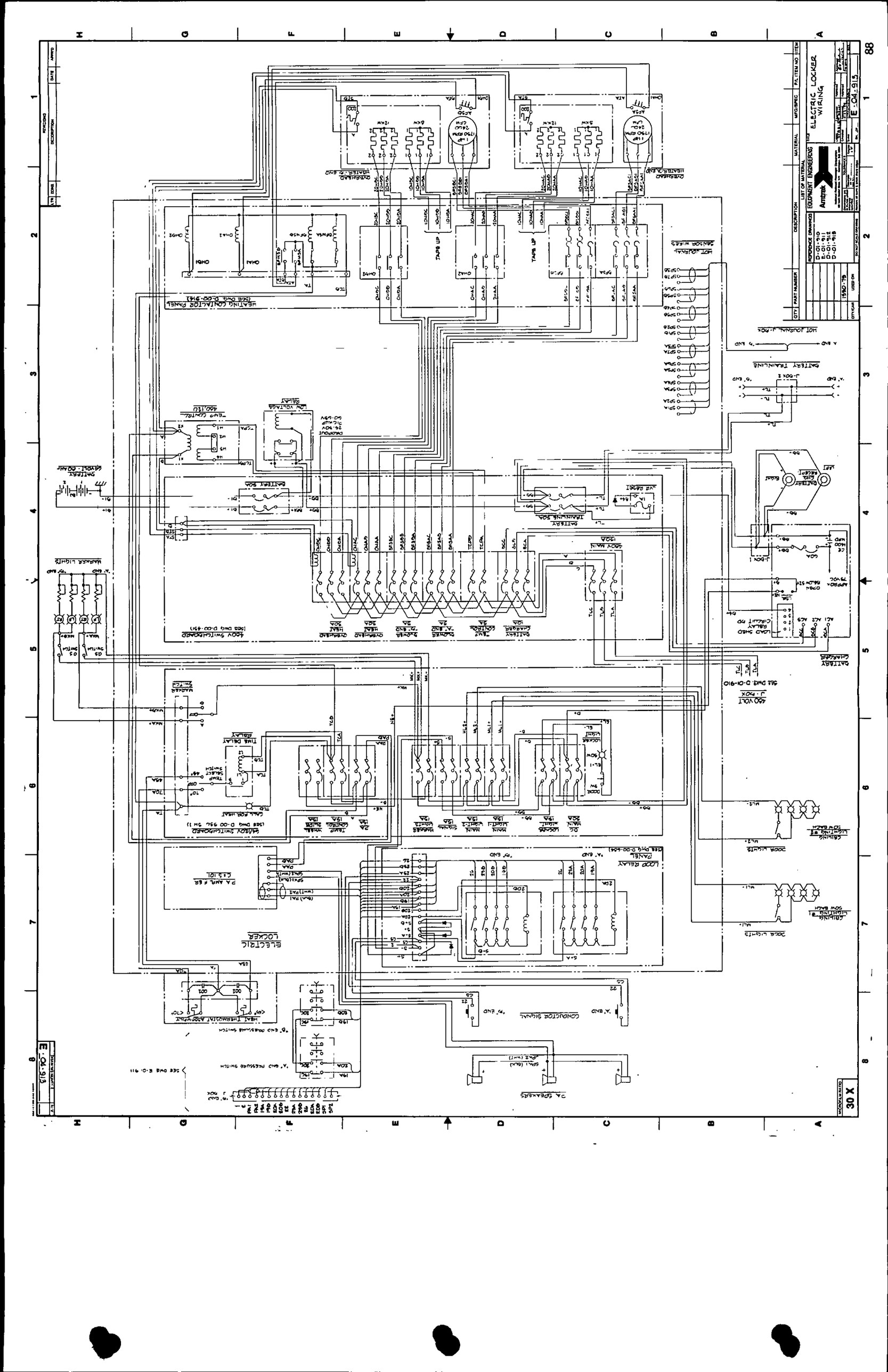
ELECTRIC LOCKER WIRING
E-04-913
Amtrak
EQUIPMENT ENGINEERING
DESCRIPTION
MATERIAL
LIST OF MATERIAL
REFERENCE DRAWINGS
D-01-910
D-01-911
E-01-912
D-01-916
D-01-917
1590-79
USED ON
CITY
PART NUMBER
ITEM
DESCRIPTION
ZONE
REVISIONS
DATE
APPD
88
30 X
E-04-913
ELECTRIC LOCKER
HEATING CONTACTOR PANEL
(SEE DWG D-00-943)
460V SWITCHBOARD
(SEE DWG D-00-951)
BATTERY BOX
BATTERY CHARGER
460V MAIN
LOOP RELAY PANEL
(SEE DWG D-00-926)
CONDUCTOR SIGNAL
2A SPEAKERS
HOT JOURNAL J-BOX
BATTERY TRAINLINE
LOAD SHED RELAY CIRCUIT BD
(SEE DWG D-01-910)
J-BOX
TRAINLINE 250A
TAPS UP
TAPS DOWN
HEATER 2.5KW
HEATER 3.5KW
HEATER 6KW
HEATER 12KW
HEATER 17.5KW
HEATER 24KW
HEATER 35KW
HEATER 48KW
HEATER 70KW
HEATER 96KW
HEATER 140KW
HEATER 190KW
HEATER 240KW
HEATER 350KW
HEATER 480KW
HEATER 700KW
HEATER 960KW
HEATER 1400KW
HEATER 1900KW
HEATER 2400KW
HEATER 3500KW
HEATER 4800KW
HEATER 7000KW
HEATER 9600KW
HEATER 14000KW
HEATER 19000KW
HEATER 24000KW
HEATER 35000KW
HEATER 48000KW
HEATER 70000KW
HEATER 96000KW
HEATER 140000KW
HEATER 190000KW
HEATER 240000KW
HEATER 350000KW
HEATER 480000KW
HEATER 700000KW
HEATER 960000KW
HEATER 1400000KW
HEATER 1900000KW
HEATER 2400000KW
HEATER 3500000KW
HEATER 4800000KW
HEATER 7000000KW
HEATER 9600000KW
HEATER 14000000KW
HEATER 19000000KW
HEATER 24000000KW
HEATER 35000000KW
HEATER 48000000KW
HEATER 70000000KW
HEATER 96000000KW
HEATER 140000000KW
HEATER 190000000KW
HEATER 240000000KW
HEATER 350000000KW
HEATER 480000000KW
HEATER 700000000KW
HEATER 960000000KW
HEATER 1400000000KW
HEATER 1900000000KW
HEATER 2400000000KW
HEATER 3500000000KW
HEATER 4800000000KW
HEATER 7000000000KW
HEATER 9600000000KW
HEATER 14000000000KW
HEATER 19000000000KW
HEATER 24000000000KW
HEATER 35000000000KW
HEATER 48000000000KW
HEATER 70000000000KW
HEATER 96000000000KW
HEATER 140000000000KW
HEATER 190000000000KW
HEATER 240000000000KW
HEATER 350000000000KW
HEATER 480000000000KW
HEATER 700000000000KW
HEATER 960000000000KW
HEATER 1400000000000KW
HEATER 1900000000000KW
HEATER 2400000000000KW
HEATER 3500000000000KW
HEATER 4800000000000KW
HEATER 7000000000000KW
HEATER 9600000000000KW
HEATER 14000000000000KW
HEATER 19000000000000KW
HEATER 24000000000000KW
HEATER 35000000000000KW
HEATER 48000000000000KW
HEATER 70000000000000KW
HEATER 96000000000000KW
HEATER 140000000000000KW
HEATER 190000000000000KW
HEATER 240000000000000KW
HEATER 350000000000000KW
HEATER 480000000000000KW
HEATER 700000000000000KW
HEATER 960000000000000KW
HEATER 1400000000000000KW
HEATER 1900000000000000KW
HEATER 2400000000000000KW
HEATER 3500000000000000KW
HEATER 4800000000000000KW
HEATER 7000000000000000KW
HEATER 9600000000000000KW
HEATER 14000000000000000KW
HEATER 19000000000000000KW
HEATER 24000000000000000KW
HEATER 35000000000000000KW
HEATER 48000000000000000KW
HEATER 70000000000000000KW
HEATER 96000000000000000KW
HEATER 140000000000000000KW
HEATER 190000000000000000KW
HEATER 240000000000000000KW
HEATER 350000000000000000KW
HEATER 480000000000000000KW
HEATER 700000000000000000KW
HEATER 960000000000000000KW
HEATER 1400000000000000000KW
HEATER 1900000000000000000KW
HEATER 2400000000000000000KW
HEATER 3500000000000000000KW
HEATER 4800000000000000000KW
HEATER 7000000000000000000KW
HEATER 9600000000000000000KW
HEATER 14000000000000000000KW
HEATER 19000000000000000000KW
HEATER 24000000000000000000KW
HEATER 35000000000000000000KW
HEATER 48000000000000000000KW
HEATER 70000000000000000000KW
HEATER 96000000000000000000KW
HEATER 140000000000000000000KW
HEATER 190000000000000000000KW
HEATER 240000000000000000000KW
HEATER 350000000000000000000KW
HEATER 480000000000000000000KW
HEATER 700000000000000000000KW
HEATER 960000000000000000000KW
HEATER 1400000000000000000000KW
HEATER 1900000000000000000000KW
HEATER 2400000000000000000000KW
HEATER 3500000000000000000000KW
HEATER 4800000000000000000000KW
HEATER 7000000000000000000000KW
HEATER 9600000000000000000000KW
HEATER 14000000000000000000000KW
HEATER 19000000000000000000000KW
HEATER 24000000000000000000000KW
HEATER 35000000000000000000000KW
HEATER 48000000000000000000000KW
HEATER 70000000000000000000000KW
HEATER 96000000000000000000000KW
HEATER 140000000000000000000000KW
HEATER 190000000000000000000000KW
HEATER 240000000000000000000000KW
HEATER 350000000000000000000000KW
HEATER 480000000000000000000000KW
HEATER 700000000000000000000000KW
HEATER 960000000000000000000000KW
HEATER 1400000000000000000000000KW
HEATER 1900000000000000000000000KW
HEATER 2400000000000000000000000KW
HEATER 3500000000000000000000000KW
HEATER 4800000000000000000000000KW
HEATER 7000000000000000000000000KW
HEATER 9600000000000000000000000KW
HEATER 14000000000000000000000000KW
HEATER 19000000000000000000000000KW
HEATER 24000000000000000000000000KW
HEATER 35000000000000000000000000KW
HEATER 48000000000000000000000000KW
HEATER 70000000000000000000000000KW
HEATER 96000000000000000000000000KW
HEATER 140000000000000000000000000KW
HEATER 190000000000000000000000000KW
HEATER 240000000000000000000000000KW
HEATER 350000000000000000000000000KW
HEATER 480000000000000000000000000KW
HEATER 700000000000000000000000000KW
HEATER 960000000000000000000000000KW
HEATER 1400000000000000000000000000KW
HEATER 1900000000000000000000000000KW
HEATER 2400000000000000000000000000KW
HEATER 3500000000000000000000000000KW
HEATER 4800000000000000000000000000KW
HEATER 7000000000000000000000000000KW
HEATER 9600000000000000000000000000KW
HEATER 14000000000000000000000000000KW
HEATER 19000000000000000000000000000KW
HEATER 24000000000000000000000000000KW
HEATER 35000000000000000000000000000KW
HEATER 48000000000000000000000000000KW
HEATER 70000000000000000000000000000KW
HEATER 96000000000000000000000000000KW
HEATER 140000000000000000000000000000KW
HEATER 190000000000000000000000000000KW
HEATER 240000000000000000000000000000KW
HEATER 350000000000000000000000000000KW
HEATER 480000000000000000000000000000KW
HEATER 700000000000000000000000000000KW
HEATER 960000000000000000000000000000KW
HEATER 1400000000000000000000000000000KW
HEATER 1900000000000000000000000000000KW
HEATER 2400000000000000000000000000000KW
HEATER 3500000000000000000000000000000KW
HEATER 4800000000000000000000000000000KW
HEATER 7000000000000000000000000000000KW
HEATER 9600000000000000000000000000000KW
HEATER 14000000000000000000000000000000KW
HEATER 19000000000000000000000000000000KW
HEATER 24000000000000000000000000000000KW
HEATER 35000000000000000000000000000000KW
HEATER 48000000000000000000000000000000KW
HEATER 70000000000000000000000000000000KW
HEATER 96000000000000000000000000000000KW
HEATER 140000000000000000000000000000000KW
HEATER 190000000000000000000000000000000KW
HEATER 240000000000000000000000000000000KW
HEATER 350000000000000000000000000000000KW
HEATER 480000000000000000000000000000000KW
HEATER 700000000000000000000000000000000KW
HEATER 960000000000000000000000000000000KW
HEATER 1400000000000000000000000000000000KW
HEATER 1900000000000000000000000000000000KW
HEATER 2400000000000000000000000000000000KW
HEATER 3500000000000000000000000000000000KW
HEATER 4800000000000000000000000000000000KW
HEATER 7000000000000000000000000000000000KW
HEATER 9600000000000000000000000000000000KW
HEATER 14000000000000000000000000000000000KW
HEATER 19000000000000000000000000000000000KW
HEATER 24000000000000000000000000000000000KW
HEATER 35000000000000000000000000000000000KW
HEATER 48000000000000000000000000000000000KW
HEATER 70000000000000000000000000000000000KW
HEATER 96000000000000000000000000000000000KW
HEATER 140000000000000000000000000000000000KW
HEATER 190000000000000000000000000000000000KW
HEATER 240000000000000000000000000000000000KW
HEATER 350000000000000000000000000000000000KW
HEATER 480000000000000000000000000000000000KW
HEATER 700000000000000000000000000000000000KW
HEATER 960000000000000000000000000000000000KW
HEATER 1400000000000000000000000000000000000KW
HEATER 1900000000000000000000000000000000000KW
HEATER 2400000000000000000000000000000000000KW
HEATER 3500000000000000000000000000000000000KW
HEATER 4800000000000000000000000000000000000KW
HEATER 7000000000000000000000000000000000000KW
HEATER 9600000000000000000000000000000000000KW
HEATER 14000000000000000000000000000000000000KW
HEATER 19000000000000000000000000000000000000KW
HEATER 24000000000000000000000000000000000000KW
HEATER 35000000000000000000000000000000000000KW
HEATER 48000000000000000000000000000000000000KW
HEATER 70000000000000000000000000000000000000KW
HEATER 96000000000000000000000000000000000000KW
HEATER 140000000000000000000000000000000000000KW
HEATER 190000000000000000000000000000000000000KW
HEATER 240000000000000000000000000000000000000KW
HEATER 350000000000000000000000000000000000000KW
HEATER 480000000000000000000000000000000000000KW
HEATER 700000000000000000000000000000000000000KW
HEATER 960000000000000000000000000000000000000KW
HEATER 1400000000000000000000000000000000000000KW
HEATER 1900000000000000000000000000000000000000KW
HEATER 2400000000000000000000000000000000000000KW
HEATER 3500000000000000000000000000000000000000KW
HEATER 4800000000000000000000000000000000000000KW
HEATER 7000000000000000000000000000000000000000KW
HEATER 9600000000000000000000000000000000000000KW
HEATER 14000000000000000000000000000000000000000KW
HEATER 19000000000000000000000000000000000000000KW
HEATER 24000000000000000000000000000000000000000KW
HEATER 35000000000000000000000000000000000000000KW
HEATER 48000000000000000000000000000000000000000KW
HEATER 70000000000000000000000000000000000000000KW
HEATER 96000000000000000000000000000000000000000KW
HEATER 140000000000000000000000000000000000000000KW
HEATER 190000000000000000000000000000000000000000KW
HEATER 240000000000000000000000000000000000000000KW
HEATER 350000000000000000000000000000000000000000KW
HEATER 480000000000000000000000000000000000000000KW
HEATER 700000000000000000000000000000000000000000KW
HEATER 960000000000000000000000000000000000000000KW
HEATER 1400000000000000000000000000000000000000000KW
HEATER 1900000000000000000000000000000000000000000KW
HEATER 2400000000000000000000000000000000000000000KW
HEATER 3500000000000000000000000000000000000000000KW
HEATER 4800000000000000000000000000000000000000000KW
HEATER 7000000000000000000000000000000000000000000KW
HEATER 9600000000000000000000000000000000000000000KW
HEATER 14000000000000000000000000000000000000000000KW
HEATER 19000000000000000000000000000000000000000000KW
HEATER 24000000000000000000000000000000000000000000KW
HEATER 35000000000000000000000000000000000000000000KW
HEATER 48000000000000000000000000000000000000000000KW
HEATER 70000000000000000000000000000000000000000000KW
HEATER 96000000000000000000000000000000000000000000KW
HEATER 140000000000000000000000000000000000000000000KW
HEATER 190000000000000000000000000000000000000000000KW
HEATER 240000000000000000000000000000000000000000000KW
HEATER 350000000000000000000000000000000000000000000KW
HEATER 480000000000000000000000000000000000000000000KW
HEATER 700000000000000000000000000000000000000000000KW
HEATER 960000000000000000000000000000000000000000000KW
HEATER 1400000000000000000000000000000000000000000000KW
HEATER 1900000000000000000000000000000000000000000000KW
HEATER 2400000000000000000000000000000000000000000000KW
HEATER 3500000000000000000000000000000000000000000000KW
HEATER 4800000000000000000000000000000000000000000000KW
HEATER 7000000000000000000000000000000000000000000000KW
HEATER 9600000000000000000000000000000000000000000000KW
HEATER 14000000000000000000000000000000000000000000000KW
HEATER 19000000000000000000000000000000000000000000000KW
HEATER 24000000000000000000000000000000000000000000000KW
HEATER 35000000000000000000000000000000000000000000000KW
HEATER 48000000000000000000000000000000000000000000000KW
HEATER 70000000000000000000000000000000000000000000000KW
HEATER 96000000000000000000000000000000000000000000000KW
HEATER 140000000000000000000000000000000000000000000000KW
HEATER 190000000000000000000000000000000000000000000000KW
HEATER 240000000000000000000000000000000000000000000000KW
HEATER 350000000000000000000000000000000000000000000000KW
HEATER 480000000000000000000000000000000000000000000000KW
HEATER 700000000000000000000000000000000000000000000000KW
HEATER 960000000000000000000000000000000000000000000000KW
HEATER 1400000000000000000000000000000000000000000000000KW
HEATER 1900000000000000000000000000000000000000000000000KW
HEATER 2400000000000000000000000000000000000000000000000KW
HEATER 3500000000000000000000000000000000000000000000000KW
HEATER 4800000000000000000000000000000000000000000000000KW
HEATER 7000000000000000000000000000000000000000000000000KW
HEATER 9600000000000000000000000000000000000000000000000KW
HEATER 14000000000000000000000000000000000000000000000000KW
HEATER 19000000000000000000000000000000000000000000000000KW
HEATER 24000000000000000000000000000000000000000000000000KW
HEATER 35000000000000000000000000000000000000000000000000KW
HEATER 48000000000000000000000000000000000000000000000000KW
HEATER 70000000000000000000000000000000000000000000000000KW
HEATER 96000000000000000000000000000000000000000000000000KW
HEATER 140000000000000000000000000000000000000000000000000KW
HEATER 190000000000000000000000000000000000000000000000000KW
HEATER 240000000000000000000000000000000000000000000000000KW
HEATER 350000000000000000000000000000000000000000000000000KW
HEATER 480000000000000000000000000000000000000000000000000KW
HEATER 700000000000000000000000000000000000000000000000000KW
HEATER 960000000000000000000000000000000000000000000000000KW
HEATER 1400000000000000000000000000000000000000000000000000KW
HEATER 1900000000000000000000000000000000000000000000000000KW
HEATER 2400000000000000000000000000000000000000000000000000KW
HEATER 3500000000000000000000000000000000000000000000000000KW
HEATER 4800000000000000000000000000000000000000000000000000KW
HEATER 7000000000000000000000000000000000000000000000000000KW
HEATER 9600000000000000000000000000000000000000000000000000KW
HEATER 14000000000000000000000000000000000000000000000000000KW
HEATER 19000000000000000000000000000000000000000000000000000KW
HEATER 24000000000000000000000000000000000000000000000000000KW
HEATER 35000000000000000000000000000000000000000000000000000KW
HEATER 48000000000000000000000000000000000000000000000000000KW
HEATER 70000000000000000000000000000000000000000000000000000KW
HEATER 96000000000000000000000000000000000000000000000000000KW
HEATER 140000000000000000000000000000000000000000000000000000KW
HEATER 190000000000000000000000000000000000000000000000000000KW
HEATER 240000000000000000000000000000000000000000000000000000KW
HEATER 350000000000000000000000000000000000000000000000000000KW
HEATER 480000000000000000000000000000000000000000000000000000KW
HEATER 700000000000000000000000000000000000000000000000000000KW
HEATER 960000000000000000000000000000000000000000000000000000KW
HEATER 1400000000000000000000000000000000000000000000000000000KW
HEATER 1900000000000000000000000000000000000000000000000000000KW
HEATER 2400000000000000000000000000000000000000000000000000000KW
HEATER 3500000000000000000000000000000000000000000000000000000KW
HEATER 4800000000000000000000000000000000000000000000000000000KW
HEATER 7000000000000000000000000000000000000000000000000000000KW
HEATER 9600000000000000000000000000000000000000000000000000000KW
HEATER 14000000000000000000000000000000000000000000000000000000KW
HEATER 19000000000000000000000000000000000000000000000000000000KW
HEATER 24000000000000000000000000000000000000000000000000000000KW
HEATER 35000000000000000000000000000000000000000000000000000000KW
HEATER 48000000000000000000000000000000000000000000000000000000KW
HEATER 70000000000000000000000000000000000000000000000000000000KW
HEATER 96000000000000000000000000000000000000000000000000000000KW
HEATER 140000000000000000000000000000000000000000000000000000000KW
HEATER 190000000000000000000000000000000000000000000000000000000KW
HEATER 240000000000000000000000000000000000000000000000000000000KW
HEATER 350000000000000000000000000000000000000000000000000000000KW
HEATER 480000000000000000000000000000000000000000000000000000000KW
HEATER 700000000000000000000000000000000000000000000000000000000KW
HEATER 960000000000000000000000000000000000000000000000000000000KW
HEATER 1400000000000000000000000000000000000000000000000000000000KW
HEATER 1900000000000000000000000000000000000000000000000000000000KW
HEATER 2400000000000000000000000000000000000000000000000000000000KW
HEATER 3500000000000000000000000000000000000000000000000000000000KW
HEATER 4800000000000000000000000000000000000000000000000000000000KW
HEATER 7000000000000000000000000000000000000000000000000000000000KW
HEATER 9600000000000000000000000000000000000000000000000000000000KW
HEATER 14000000000000000000000000000000000000000000000000000000000KW
HEATER 19000000000000000000000000000000000000000000000000000000000KW
HEATER 24000000000000000000000000000000000000000000000000000000000KW
HEATER 35000000000000000000000000000000000000000000000000000000000KW
HEATER 48000000000000000000000000000000000000000000000000000000000KW
HEATER 70000000000000000000000000000000000000000000000000000000000KW
HEATER 96000000000000000000000000000000000000000000000000000000000KW
HEATER 140000000000000000000000000000000000000000000000000000000000KW
HEATER 190000000000000000000000000000000000000000000000000000000000KW
HEATER 240000000000000000000000000000000000000000000000000000000000KW
HEATER 350000000000000000000000000000000000000000000000000000000000KW
HEATER 480000000000000000000000000000000000000000000000000000000000KW
HEATER 700000000000000000000000000000000000000000000000000000000000KW
HEATER 960000000000000000000000000000000000000000000000000000000000KW
HEATER 1400000000000000000000000000000000000000000000000000000000000KW
HEATER 1900000000000000000000000000000000000000000000000000000000000KW
HEATER 2400000000000000000000000000000000000000000000000000000000000KW
HEATER 3500000000000000000000000000000000000000000000000000000000000KW
HEATER 4800000000000000000000000000000000000000000000000000000000000KW
HEATER 7000000000000000000000000000000000000000000000000000000000000KW
HEATER 9600000000000000000000000000000000000000000000000000000000000KW
HEATER 14000000000000000000000000000000000000000000000000000000000000KW
HEATER 19000000000000000000000000000000000000000000000000000000000000KW
HEATER 24000000000000000000000000000000000000000000000000000000000000KW
HEATER 35000000000000000000000000000000000000000000000000000000000000KW
HEATER 48000000000000000000000000000000000000000000000000000000000000KW
HEATER 70000000000000000000000000000000000000000000000000000000000000KW
HEATER 96000000000000000000000000000000000000000000000000000000000000KW
HEATER 140000000000000000000000000000000000000000000000000000000000000KW
HEATER 190000000000000000000000000000000000000000000000000000000000000KW
HEATER 240000000000000000000000000000000000000000000000000000000000000KW
HEATER 350000000000000000000000000000000000000000000000000000000000000KW
HEATER 480000000000000000000000000000000000000000000000000000000000000KW
HEATER 700000000000000000000000000000000000000000000000000000000000000KW
HEATER 960000000000000000000000000000000000000000000000000000000000000KW
HEATER 1400000000000000000000000000000000000000000000000000000000000000KW
HEATER 1900000000000000000000000000000000000000000000000000000000000000KW
HEATER 2400000000000000000000000000000000000000000000000000000000000000KW
HEATER 3500000000000000000000000000000000000000000000000000000000000000KW
HEATER 4800000000000000000000000000000000000000000000000000000000000000KW
HEATER 7000000000000000000000000000000000000000000000000000000000000000KW
HEATER 9600000000000000000000000000000000000000000000000000000000000000KW
HEATER 14000000000000000000000000000000000000000000000000000000000000000KW
HEATER 19000000000000000000000000000000000000000000000000000000000000000KW
HEATER 24000000000000000000000000000000000000000000000000000000000000000KW
HEATER 35000000000000000000000000000000000000000000000000000000000000000KW
HEATER 48000000000000000000000000000000000000000000000000000000000000000KW
HEATER 70000000000000000000000000000000000000000000000000000000000000000KW
HEATER 96000000000000000000000000000000000000000000000000000000000000000KW
HEATER 140000000000000000000000000000000000000000000000000000000000000000KW
HEATER 190000000000000000000000000000000000000000000000000000000000000000KW
HEATER 240000000000000000000000000000000000000000000000000000000000000000KW
HEATER 350000000000000000000000000000000000000000000000000000000000000000KW
HEATER 480000000000000000000000000000000000000000000000000000000000000000KW
HEATER 700000000000000000000000000000000000000000000000000000000000000000KW
HEATER 960000000000000000000000000000000000000000000000000000000000000000KW
HEATER 1400000000000000000000000000000000000000000000000000000000000000000KW
HEATER 1900000000000000000000000000000000000000000000000000000000000000000KW
HEATER 2400000000000000000000000000000000000000000000000000000000000000000KW
HEATER 3500000000000000000000000000000000000000000000000000000000000000000KW
HEATER 4800000000000000000000000000000000000000000000000000000000000000000KW
HEATER 7000000000000000000000000000000000000000000000000000000000000000000KW
HEATER 9600000000000000000000000000000000000000000000000000000000000000000KW
HEATER 14000000000000000000000000000000000000000000000000000000000000000000KW
HEATER 19000000000000000000000000000000000000000000000000000000000000000000KW
HEATER 24000000000000000000000000000000000000000000000000000000000000000000KW
HEATER 35000000000000000000000000000000000000000000000000000000000000000000KW
HEATER 48000000000000000000000000000000000000000000000000000000000000000000KW
HEATER 70000000000000000000000000000000000000000000000000000000000000000000KW
HEATER 96000000000000000000000000000000000000000000000000000000000000000000KW
HEATER 140000000000000000000000000000000000000000000000000000000000000000000KW
HEATER 190000000000000000000000000000000000000000000000000000000000000000000KW
HEATER 240000000000000000000000000000000000000000000000000000000000000000000KW
HEATER 350000000000000000000000000000000000000000000000000000000000000000000KW
HEATER 480000000000000000000000000000000000000000000000000000000000000000000KW
HEATER 700000000000000000000000000000000000000000000000000000000000000000000KW
HEATER 960000000000000000000000000000000000000000000000000000000000000000000KW
HEATER 1400000000000000000000000000000000000000000000000000000000000000000000KW
HEATER 1900000000000000000000000000000000000000000000000000000000000000000000KW
HEATER 2400000000000000000000000000000000000000000000000000000000000000000000KW
HEATER 3500000000000000000000000000000000000000000000000000000000000000000000KW
HEATER 4800000000000000000000000000000000000000000000000000000000000000000000KW
HEATER 7000000000000000000000000000000000000000000000000000000000000000000000KW
HEATER 9600000000000000000000000000000000000000000000000000000000000000000000KW
HEATER 14000000000000000000000000000000000000000000000000000000000000000000000KW
HEATER 19000000000000000000000000000000000000000000000000000000000000000000000KW
HEATER 24000000000000000000000000000000000000000000000000000000000000000000000KW
HEATER 35000000000000000000000000000000000000000000000000000000000000000000000KW
HEATER 48000000000000000000000000000000000000000000000000000000000000000000000KW
HEATER 70000000000000000000000000000000000000000000000000000000000000000000000KW
HEATER 96000000000000000000000000000000000000000000000000000000000000000000000KW
HEATER 140000000000000000000000000000000000000000000000000000000000000000000000KW
HEATER 190000000000000000000000000000000000000000000000000000000000000000000000KW
HEATER 240000000000000000000000000000000000000000000000000000000000000000000000KW
HEATER 350000000000000000000000000000000000000000000000000000000000000000000000KW
HEATER 480000000000000000000000000000000000000000000000000000000000000000000000KW
HEATER 700000000000000000000000000000000000000000000000000000000000000000000000KW
HEATER 960000000000000000000000000000000000000000000000000000000000000000000000KW
HEATER 1400000000000000000000000000000000000000000000000000000000000000000000000KW
HEATER 1900000000000000000000000000000000000000000000000000000000000000000000000KW
HEATER 2400000000000000000000000000000000000000000000000000000000000000000000000KW
HEATER 3500000000000000000000000000000000000000000000000000000000000000000000000KW
HEATER 4800000000000000000000000000000000000000000000000000000000000000000000000KW
HEATER 7000000000000000000000000000000000000000000000000000000000000000000000000KW
HEATER 9600000000000000000000000000000000000000000000000000000000000000000000000KW
HEATER 14000000000000000000000000000000000000000000000000000000000000000000000000KW
HEATER 19000000000000000000000000000000000000000000000000000000000000000000000000KW
HEATER 24000000000000000000000000000000000000000000000000000000000000000000000000KW
HEATER 35000000000000000000000000000000000000000000000000000000000000000000000000KW
HEATER 48000000000000000000000000000000000000000000000000000000000000000000000000KW
HEATER 70000000000000000000000000000000000000000000000000000000000000000000000000KW
HEATER 96000000000000000000000000000000000000000000000000000000000000000000000000KW
HEATER 140000000000000000000000000000000000000000000000000000000000000000000000000KW
HEATER 190000000000000000000000000000000000000000000000000000000000000000000000000KW
HEATER 240000000000000000000000000000000000000000000000000000000000000000000000000KW
HEATER 350000000000000000000000000000000000000000000000000000000000000000000000000KW
HEATER 480000000000000000000000000000000000000000000000000000000000000000000000000KW
HEATER 700000000000000000000000000000000000000000000000000000000000000000000000000KW
HEATER 960000000000000000000000000000000000000000000000000000000000000000000000000KW
HEATER 1400000000000000000000000000000000000000000000000000000000000000000000000000KW
HEATER 1900000000000000000000000000000000000000000000000000000000000000000000000000KW
HEATER 2400000000000000000000000000000000000000000000000000000000000000000000000000KW
HEATER 3500000000000000000000000000000000000000000000000000000000000000000000000000KW
HEATER 4800000000000000000000000000000000000000000000000000000000000000000000000000KW
HEATER 7000000000000000000000000000000000000000000000000000000000000000000000000000KW
HEATER 9600000000000000000000000000000000000000000000000000000000000000000000000000KW
HEATER 14000000000000000000000000000000000000000000000000000000000000000000000000000KW
HEATER 19000000000000000000000000000000000000000000000000000000000000000000000000000KW
HEATER 24000000000000000000000000000000000000000000000000000000000000000000000000000KW
HEATER 35000000000000000000000000000000000000000000000000000000000000000000000000000KW
HEATER 48000000000000000000000000000000000000000000000000000000000000000000000000000KW
HEATER 70000000000000000000000000000000000000000000000000000000000000000000000000000KW
HEATER 96000000000000000000000000000000000000000000000000000000000000000000000000000KW
HEATER 140000000000000000000000000000000000000000000000000000000000000000000000000000KW
HEATER 190000000000000000000000000000000000000000000000000000000000000000000000000000KW
HEATER 240000000000000000000000000000000000000000000000000000000000000000000000000000KW
HEATER 350000000000000000000000000000000000000000000000000000000000000000000000000000KW
HEATER 480000000000000000000000000000000000000000000000000000000000000000000000000000KW
HEATER 700000000000000000000000000000000000000000000000000000000000000000000000000000KW
HEATER 960000000000000000000000000000000000000000000000000000000000000000000000000000KW
HEATER 1400000000000000000000000000000000000000000000000000000000000000000000000000000KW
HEATER 1900000000000000000000000000000000000000000000000000000000000000000000000000000KW
HEATER 2400000000000000000000000000000000000000000000000000000000000000000000000000000KW
HEATER 3500000000000000000000000000000000000000000000000000000000000000000000000000000KW
HEATER 4800000000000000000000000000000000000000000000000000000000000000000000000000000KW
HEATER 7000000000000000000000000000000000000000000000000000000000000000000000000000000KW
HEATER 9600000000000000000000000000000000000000000000000000000000000000000000000000000KW
HEATER 14000000000000000000000000000000000000000000000000000000000000000000000000000000KW
HEATER 19000000000000000000000000000000000000000000000000000000000000000000000000000000KW
HEATER 24000000000000000000000000000000000000000000000000000000000000000000000000000000KW
HEATER 35000000000000000000000000000000000000000000000000000000000000000000000000000000KW
HEATER 48000000000000000000000000000000000000000000000000000000000000000000000000000000KW
HEATER 70000000000000000000000000000000000000000000000000000000000000000000000000000000KW
HEATER 96000000000000000000000000000000000000000000000000000000000000000000000000000000KW
HEATER 140000000000000000000000000000000000000000000000000000000000000000000000000000000KW
HEATER 190000000000000000000000000000000000000000000000000000000000000000000000000000000KW
HEATER 240000000000000000000000000000000000000000000000000000000000000000000000000000000KW
HEATER 350000000000000000000000000000000000000000000000000000000000000000000000000000000KW
HEATER 480000000000000000000000000000000000000000000000000000000000000000000000000000000KW
HEATER 700000000000000000000000000000000000000000000000000000000000000000000000000000000KW
HEATER 960000000000000000000000000000000000000000000000000000000000000000000000000000000KW
HEATER 1400000000000000000000000000000000000000000000000000000000000000000000000000000000KW
HEATER 1900000000000000000000000000000000000000000000000000000000000000000000000000000000KW
HEATER 2400000000000000000000000000000000000000000000000000000000000000000000000000000000KW
HEATER 3500000000000000000000000000000000000000000000000000000000000000000000000000000000KW
HEATER 4800000000000000000000000000000000000000000000000000000000000000000000000000000000KW
HEATER 7000000000000000000000000000000000000000000000000000000000000000000000000000000000KW
HEATER 9600000000000000000000000000000000000000000000000000000000000000000000000000000000KW
HEATER 14000000000000000000000000000000000000000000000000000000000000000000000000000000000KW
HEATER 19000000000000000000000000000000000000000000000000000000000000000000000000000000000KW
HEATER 24000000000000000000000000000000000000000000000000000000000000000000000000000000000KW
HEATER 35000000000000000000000000000000000000000000000000000000000000000000000000000000000KW
HEATER 48000000000000000000000000000000000000000000000000000000000000000000000000000000000KW
HEATER 70000000000000000000000000000000000000000000000000000000000000000000000000000000000KW
HEATER 96000000000000000000000000000000000000000000000000000000000000000000000000000000000KW
HEATER 140000000000000000000000000000000000000000000000000000000000000000000000000000000000KW
HEATER 190000000000000000000000000000000000000000000000000000000000000000000000000000000000KW
HEATER 240000000000000000000000000000000000000000000000000000000000000000000000000000000000KW
HEATER 350000000000000000000000000000000000000000000000000000000000000000000000000000000000KW
HEATER 480000000000000000000000000000000000000000000000000000000000000000000000000000000000KW
HEATER 700000000000000000000000000000000000000000000000000000000000000000000000000000000000KW
HEATER 960000000000000000000000000000000000000000000000000000000000000000000000000000000000KW
HEATER 1400000000000000000000000000000000000000000000000000000000000000000000000000000000000KW
HEATER 1900000000000000000000000000000000000000000000000000000000000000000000000000000000000KW
HEATER 2400000000000000000000000000000000000000000000000000000000000000000000000000000000000KW
HEATER 3500000000000000000000000000000000000000000000000000000000000000000000000000000000000KW
HEATER 4800000000000000000000000000000000000000000000000000000000000000000000000000000000000KW
HEATER 7000000000000000000000000000000000000000000000000000000000000000000000000000000000000KW
HEATER 9600000000000000000000000000000000000000000000000000000000000000000000000000000000000KW
HEATER 14000000000000000000000000000000000000000000000000000000000000000000000000000000000000KW
HEATER 19000000000000000000000000000000000000000000000000000000000000000000000000000000000000KW
HEATER 24000000000000000000000000000000000000000000000000000000000000000000000000000000000000KW
HEATER 35000000000000000000000000000000000000000000000000000000000000000000000000000000000000KW
HEATER 48000000000000000000000000000000000000000000000000000000000000000000000000000000000000KW
HEATER 70000000000000000000000000000000000000000000000000000000000000000000000000000000000000KW
HEATER 96000000000000000000000000000000000000000000000000000000000000000000000000000000000000KW
HEATER 140000000000000000000000000000000000000000000000000000000000000000000000000000000000000KW
HEATER 190000000000000000000000000000000000000000000000000000000000000000000000000000000000000KW
HEATER 240000000000000000000000000000000000000000000000000000000000000000000000000000000000000KW
HEATER 350000000000000000000000000000000000000000000000000000000000000000000000000000000000000KW
HEATER 480000000000000000000000000000000000000000000000000000000000000000000000000000000000000KW
HEATER 700000000000000000000000000000000000000000000000000000000000000000000000000000000000000KW
HEATER 960000000000000000000000000000000000000000000000000000000000000000000000000000000000000KW
HEATER 1400000000000000000000000000000000000000000000000000000000000000000000000000000000000000KW
HEATER 1900000000000000000000000000000000000000000000000000000000000000000000000000000000000000KW
HEATER 2400000000000000000000000000000000000000000000000000000000000000000000000000000000000000KW
HEATER 3500000000000000000000000000000000000000000000000000000000000000000000000000000000000000KW
HEATER 4800000000000000000000000000000000000000000000000000000000000000000000000000000000000000KW
HEATER 7000000000000000000000000000000000000000000000000000000000000000000000000000000000000000KW
HEATER 9600000000000000000000000000000000000000000000000000000000000000000000000000000000000000KW
HEATER 14000000000000000000000000000000000000000000000000000000000000000000000000000000000000000KW
HEATER 19000000000000000000000000000000000000000000000000000000000000000000000000000000000000000KW
HEATER 24000000000000000000000000000000000000000000000000000000000000000000000000000000000000000KW
HEATER 35000000000000000000000000000000000000000000000000000000000000000000000000000000000000000KW
HEATER 48000000000000000000000000000000000000000000000000000000000000000000000000000000000000000KW
HEATER 70000000000000000000000000000000000000000000000000000000000000000000000000000000000000000KW
HEATER 96000000000000000000000000000000000000000000000000000000000000000000000000000000000000000KW
HEATER 140000000000000000000000000000000000000000000000000000000000000000000000000000000000000000KW
HEATER 190000000000000000000000000000000000000000000000000000000000000000000000000000000000000000KW
HEATER 240000000000000000000000000000000000000000000000000000000000000000000000000000000000000000KW
HEATER 350000000000000000000000000000000000000000000000000000000000000000000000000000000000000000KW
HEATER 480000000000000000000000000000000000000000000000000000000000000000000000000000000000000000KW
HEATER 700000000000000000000000000000000000000000000000000000000000000000000000000000000000000000KW
HEATER 960000000000000000000000000000000000000000000000000000000000000000000000000000000000000000KW
HEATER 1400000000000000000000000000000000000000000000000000000000000000000000000000000000000000000KW
HEATER 1900000000000000000000000000000000000000000000000000000000000000000000000000000000000000000KW
HEATER 2400000000000000000000000000000000000000000000000000000000000000000000000000000000000000000KW
HEATER 3500000000000000000000000000000000000000000000000000000000000000000000000000000000000000000KW
HEATER 4800000000000000000000000000000000000000000000000000000000000000000000000000000000000000000KW
HEATER 7000000000000000000000000000000000000000000000000000000000000000000000000000000000000000000KW
HEATER 9600000000000000000000000000000000000000000000000000000000000000000000000000000000000000000KW
HEATER 14000000000000000000000000000000000000000000000000000000000000000000000000000000000000000000KW
HEATER 19000000000000000000000000000000000000000000000000000000000000000000000000000000000000000000KW
HEATER 24000000000000000000000000000000000000000000000000000000000000000000000000000000000000000000KW
HEATER 35000000000000000000000000000000000000000000000000000000000000000000000000000000000000000000KW
HEATER 48000000000000000000000000000000000000000000000000000000000000000000000000000000000000000000KW
HEATER 70000000000000000000000000000000000000000000000000000000000000000000000000000000000000000000KW
HEATER 96000000000000000000000000000000000000000000000000000000000000000000000000000000000000000000KW
HEATER 140000000000000000000000000000000000000000000000000000000000000000000000000000000000000000000KW
HEATER 190000000000000000000000000000000000000000000000000000000000000000000000000000000000000000000KW
HEATER 240000000000000000000000000000000000000000000000000000000000000000000000000000000000000000000KW
HEATER 350000000000000000000000000000000000000000000000000000000000000000000000000000000000000000000KW
HEATER 480000000000000000000000000000000000000000000000000000000000000000000000000000000000000000000KW

116-10-3

RECEPTACLES DUMMY LEFT RIGHT

"A" END J-BOX

"B" END J-BOX

RECEPTACLES LEFT RIGHT DUMMY

#10 AWG ALL OTHERS #18 AWG EXCEPT 3A1 SOLDIED WHICH IS #16

2DA	2DA	2D LOOP RELAY COIL	2DA
1	1	TB - BATTERY NEGATIVE	1
3	3	PA1 - TAPE MUSIC-1 (BLK)	3
4	4	PA2 - TAPE MUSIC-2 (WHT)	4
5	5	PA3 - PA & INTERCOM (BLK)	5
6	6	PA4 - PA & INTERCOM (WHT)	6
7	7	PA5 - PA CONTROL (BLK)	7
8	8	PA6 - PA CONTROL (WHT)	8
9	9	RA1 - RADIO (BLK)	9
10	10	RA2 - RADIO (WHT)	10
11	11	EP1 - BRAKE APPLICATION	11
12	12	EP2 - BRAKE RELEASE	12
13	13	EP3 - BRAKE NEGATIVE	13
14	14	D1 - DOOR CONTROL	14
15	15	D2 - DOOR CONTROL	15
16	16	D3 - DOOR CONTROL	16
17	17	D4 - DOOR CONTROL	17
18	18	D1CA - DOOR CLOSE LIGHT	18
19	19A	BRA - BRAKE RELEASE LIGHT	19A
20	20A	BAA BRAKE APPLIED LIGHT	20A
21	21	HJ - HOT JOURNAL	21
22	22	CS - CONDUCTOR SIGNAL	22
23	23	DC2A - DOOR CLOSE LIGHT	23
24	24	PA7 - TAPE MUSIC-2 (BLK)	24
25	25	PA8 - TAPE MUSIC-2 (WHT)	25
26	26	AL5 - CONDUCTOR DOOR CLOSED LIGHT	26
27	27	AN ATTENDANT CALL	27
SP1	SP1		SP1
SP2	SP2		SP2

"A" END

"B" END

NOTE POLARITY OF ALL CONNECTIONS

AIR BRAKE PRESSURE SWITCHES

MORE THAN 25 PSIG
"B" OPEN & "A" CLOSED

LESS THAN 10 PSIG
"B" CLOSED & "A" OPEN

(SHOWN BRAKES RELEASED)

PA UNIT

PA1(BLK)
PA2(WHT)

CONDUCTOR SIGNAL

64 VDC

15A

"A" END COND SIGNAL

"B" END COND SIGNAL

"A" END

"B" END

LR-A

LR-B

LOOP RELAY PANEL
(DWG. D-00-654)

SP1
SP2
SPARES (TAPE UP)

REVISIONS

LTR	ZONE	DESCRIPTION	DATE	APPVD

QTY	PART NUMBER	DESCRIPTION	MATERIAL	MFG/SPEC	PA ITEM NO	ITEM

LIST OF MATERIAL

REFERENCE DRAWINGS
C-01-1498
C-01-1499

1203-72
1350-79

QTY/CAR | USED ON

DO NOT SCALE DRAWING

EQUIPMENT ENGINEERING

Amtrak

SIZE D

27-PT COMMUNICATIONS TRAINLINE SCHEMATIC

DOCUMENT NUMBER E-01-911

MICROFILM RATIO 30 X

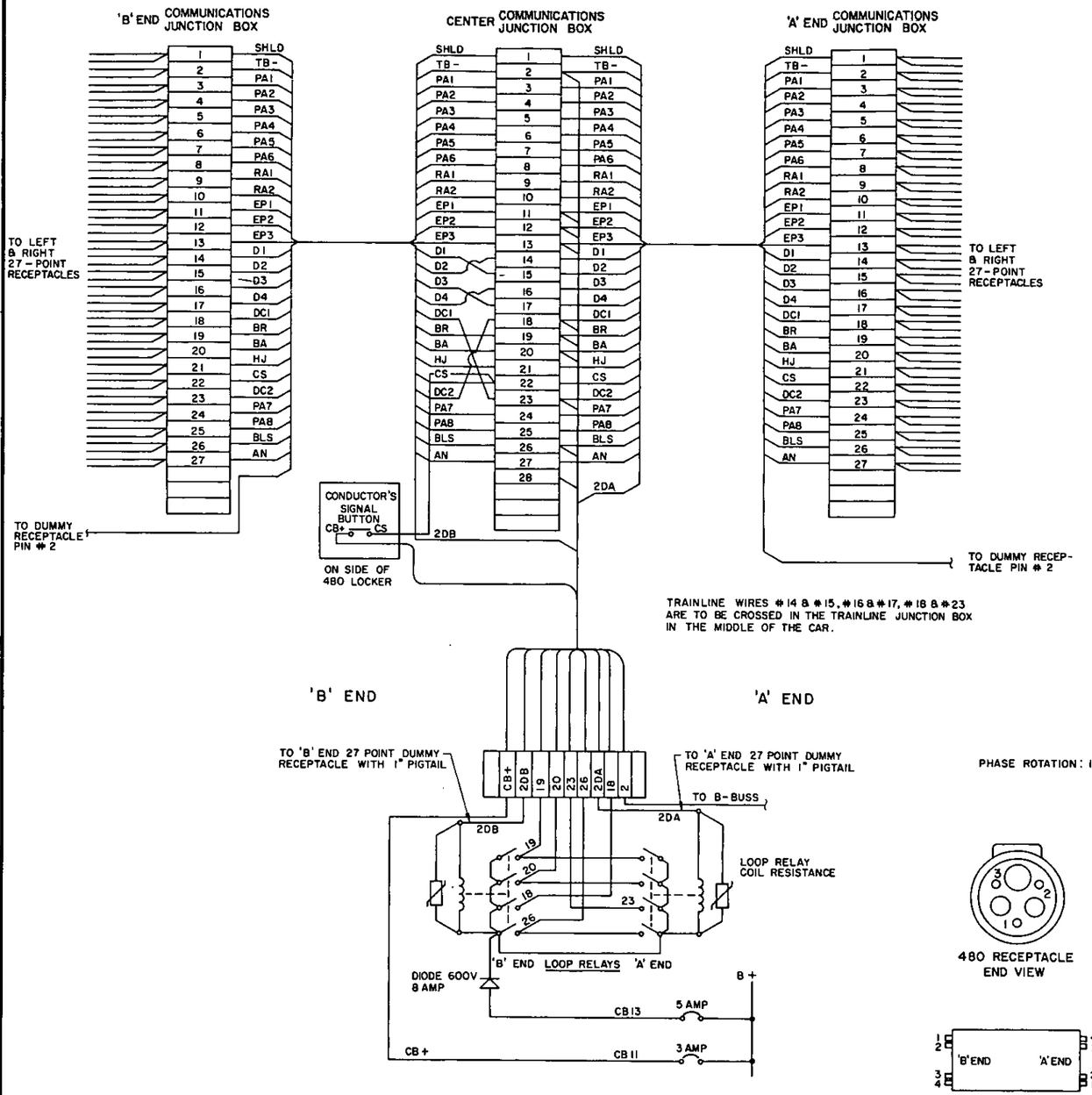

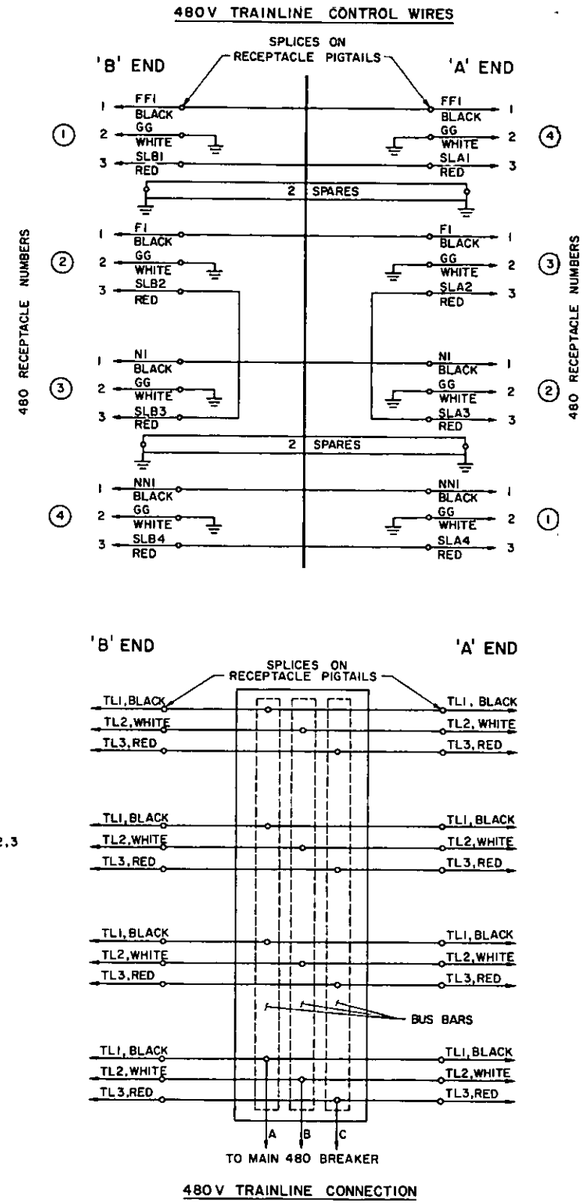

REVISIONS				
LTR	ZONE	DESCRIPTION	DATE	APP'D

LIST OF 27 PIN WIRES

PIN NO.	WIRE NAME	WIRE FUNCTION
1	SHIELDS	AUDIO CABLE SHIELDS
2	TB	CAR BATTERY NEGATIVE
3	PA1	TAPE MUSIC # 1
4	PA2	TAPE MUSIC # 1
5	PA3	PUBLIC ADDRESS & INTERCOMM
6	PA4	PUBLIC ADDRESS & INTERCOMM
7	PA5	PUBLIC ADDRESS CONTROL
8	PA6	PUBLIC ADDRESS CONTROL
9	RA1	RADIO
10	RA2	RADIO
11	EP1	BRAKE APPLICATION (+)
12	EP2	BRAKE RELEASE (+)
13	EP3	BRAKE NEGATIVE (−)
14	D2B	DOOR CONTROL LEFT SIDE (OPEN)
15	D1B	DOOR CONTROL RIGHT SIDE (OPEN)
16	D4B	DOOR CONTROL LEFT SIDE (CLOSE)
17	D3B	DOOR CONTROL RIGHT SIDE (CLOSE)
18	DC2B	DOOR CLOSE LIGHT (ENGINEMAN'S)
19	BRB	BRAKE RELEASE LIGHT (ENGINEMAN'S)
20	BAB	BRAKE APPLIED LIGHT (ENGINEMAN'S)
21	HJ	HOT JOURNAL LIGHT
22	CS	CONDUCTORS SIGNAL
23	DC1B	CONDUCTORS DOOR CLOSE LIGHT
24	PA7	TAPE MUSIC # 2
25	PA8	TAPE MUSIC # 2
26	BLS	CONDUCTORS DOOR CLOSE LIGHT
27	AN	ATTENDANT CALL

QTY/CAR	USED ON
	1250-72 2
	1203-49 3

REFERENCE DRAWINGS:

SOME CARS ONLY: SEE ALSO E-04-722

EQUIPMENT ENGINEERING
Amtrak
National Railroad Passenger Corporation

TITLE
TRAINLINE CIRCUITS
HEP BAGGAGE

DRAWN BREUER 4-17-78 | CHECKED RFBRUSS 1/16/80 | APPROVED | APPROVED 4/17/80

SCALE NONE | DRAWING NO D-04-458

REVISIONS				
LTR	ZONE	DESCRIPTION	DATE	APP'D

480 VAC, 3 ϕ TRAINLINE
REF. DWG. D-01-910

"A" END HEATER
12 KW
(6 KW FOR FUTURE USE)

"B" END HEATER
12 KW
(6 KW FOR FUTUR

1 HP 1750 RPM, 2400 CFM
1 HP 1750 RPM 2400 CFM

DOOR TRACK HEATER (FUTURE)

LOCKER LIGHT 50W

"A" END MARKER LIGHTS 240W (4@60W)

"B" END MARKER LIGHTS

MAIN LIGHTING-1 250W (5@50W)

DOOR LIGHTS 100W (2@50W)

MAIN LIGHTING-2 250W (5@50W)

27 POINT TRAINLINE REFER TO DWG D-01-911

QTY	PART NUMBER	DESCRIPTION	MATERIAL	MFG/SPEC	ITEM

LIST OF MATERIAL

REFERENCE DRAWINGS:

1350-79
QTY/CAR | USED ON

EQUIPMENT ENGINEERING
Amtrak
National Railroad Passenger Corporation
400 N Capitol St., Washington, D.C. 20001

TITLE: SINGLE LINE POWER DISTRIBUTION BAGGAGE CARS

DR: STEBLE | APP'D: | APP'D | APP'D FOR ISSUE:
CK'D: | APP'D: 10-6-82 | APP'D: | APP'D: 10-13-82
SCALE: NONE | DRAWING NO. D-01-912 | REV.

MICROFILM RATIO 24X

REVISIONS				
LTR	ZONE	DESCRIPTION	DATE	APP'D

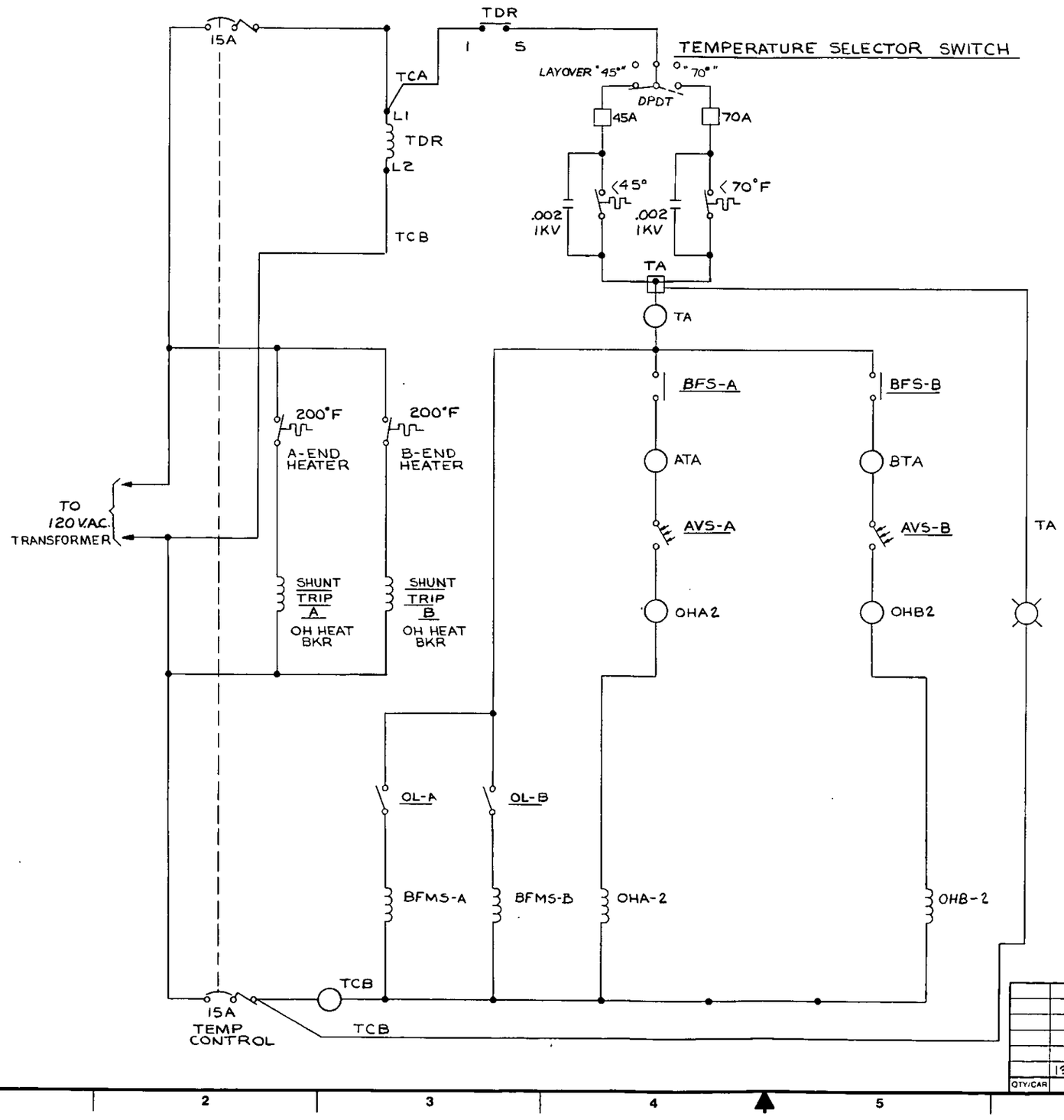

REFERENCE DRAWINGS:	EQUIPMENT ENGINEERING	TITLE
D-00-800	Amtrak National Railroad Passenger Corporation	TEMPERATURE CONTROL SCHEMATIC

DRAWN	CHECKED	APPROVED	APPROVED
10/18/82 STEELE	10/18/82 A. BRUSS		

SCALE	DRAWING NO	REV
NONE	D-01-915	

QTY/CAR	USED ON
	1350-79

LEGEND:

A	AMPERE
AC	ALTERNATING CURRENT
AF	ANTIFREEZE
AH	AMPERE HOUR
BFMS	BLOWER FAN CONTACTOR
CMR	COOL MODULATION RELAY
CM	COMPRESSOR
CN	CONDENSOR
CT	CONTROL TRANSFORMER
DC	DIRECT CURRENT
DR	DUCT RELAY
EFC	EXHAUST FAN CONTACTOR
EV	EVAPORATOR
F	FAHRENHEIT
FH	FLOOR HEAT CONTACTORS
GRN	GROUND
HC	HEAT CONTROL
HCR	HEAT COOL RELAY
HP/LP	HIGH PRESSURE / LOW PRESSURE
HP	HIGH PRESSURE
HP	HORSE POWER
KVA	KILOVOLT AMPERE
LP	LOW PRESSURE
LW	LOW WATER LEVEL RELAY
NiCd	NICKEL-CADIUM
OL	OVERLOAD
OH	OVERHEAD HEAT
OS	OUTSIDE TEMPERATURE
OVRD	COOLING OVERIDE
PIV	PEAK INVERSE VOLTAGE
PSIG	POUND PER SQUARE INCH GAGE
RCMC	A/C COMPRESSOR & CONDENSER MOTORS CONTACTOR
T	THERMOSTAT
TDR	TIME DELAY RELAY
VAC	VOLTS ALTERNATING CURRENT
VDC	VOLTS DIRECT CURRENT
Ω	OHM
μfd	MICRO FARAD

PACIFIC CONVERSION

CAR NUMBERS ORIGINAL	NEW
2600	2900
2603	2903
2611	2911
2615	2915
2617	2917
2620	2920
2623	2923
2633	2933
2640	2940
2641	2941
2613	2913
2624	2924
2632	2932

PINE CONVERSION

CAR NUMBERS ORIGINAL	NEW
2714	2980
2715	2981
2729	2982
2710	2983
2713	2984
2723	2985
2726	2986
2732	2987
2716	2988
2717	2989
2721	2990
2711	2991
2728	2992
2720	2993
2725	2994
2712	2995
2733	2996
2731	2997

NOTES:

1. 2.5A INDICATES NORMAL CURRENT IN CIRCUIT.
2. FILLED IN DOTS ARE TERMINAL BLOCKS.
3. NOTES IN PARENTHESIS INDICATE LOCATION.
4. ALL RELAYS & CONTACTORS SHOWN DROPPED OUT.
5. ALL PRESSURE SWITCHES SHOWN WITH ZERO PSIG PRESSURE ON SYSTEM.
6. ALL THERMOSTATS SHOWN AT LESS THAN 0°F
7. FOR ELECTRICAL SYMBOLS SEE AMTRAK DRAWING D-04-414

REVISIONS

LTR	ZONE	DESCRIPTION	DATE	APP'D
A	SH2,3	CHANGED TITLE BLOCK & "USED ON"	9/26/78	
	SH 7	CORRECTION ON WIRE NAMES		
	SH 7, 8 & 12	ADDED WIRE NAMES		
B	SH 1	ADDED 4 CAR NOS. & NOTES 4-7	12/1/78	
C	SH2,3	ADDED ANTIFREEZE HEAT TAPE	12/4/78	
D	SH 5	ADDED NEW SHEET 5A	12/20/78	
E	SH 5	CAR RETROFIT TO CORRECT ANTIFREEZE CYCLING PROBLEMS	7/11/79	
F	SH 1	REMOVED REVISIONS ON SH. 2-14 AND TRANSFERRED TO SH. 1	12/1/83	
	SH2,3	UPDATED ANTIFREEZE SYSTEM		
	SH 5	CHANGED SH. 5A TO SH. 5; UPDATED		
	SH 6	UPDATE TEMP CONTROL PANEL POWER FEED & BREAKER		
	SH 7,8	REPLACED FUSES W/CIRCUIT BKRS		
	SH 11	UPDATED		
	SH 12	ADDED ENTRANCE LIGHTS; ADDED WATTS TO LAMPS; ADDED CIRCUITS; CONNECTED TR2 WIRING		
	SH2,3, 5, 7-12	REVISED TITLE BLOCKS		2-1-83
	SH 1-14	CHANGED "USED ON" BLOCK		RFB

2900-97
USED ON

REFERENCE DRAWINGS:

EQUIPMENT ENGINEERING
Amtrak
National Railroad Passenger Corporation

TITLE: SCHEMATIC LEGEND & CAR NUMBER TABULATION 2900 CLASS SLEEPERS

DRAWN 8-11-78 | CHECKED DEO 8-11-78 | APPROVED | APPROVED

SCALE NONE | DRAWING NO D-04-440 | REV F

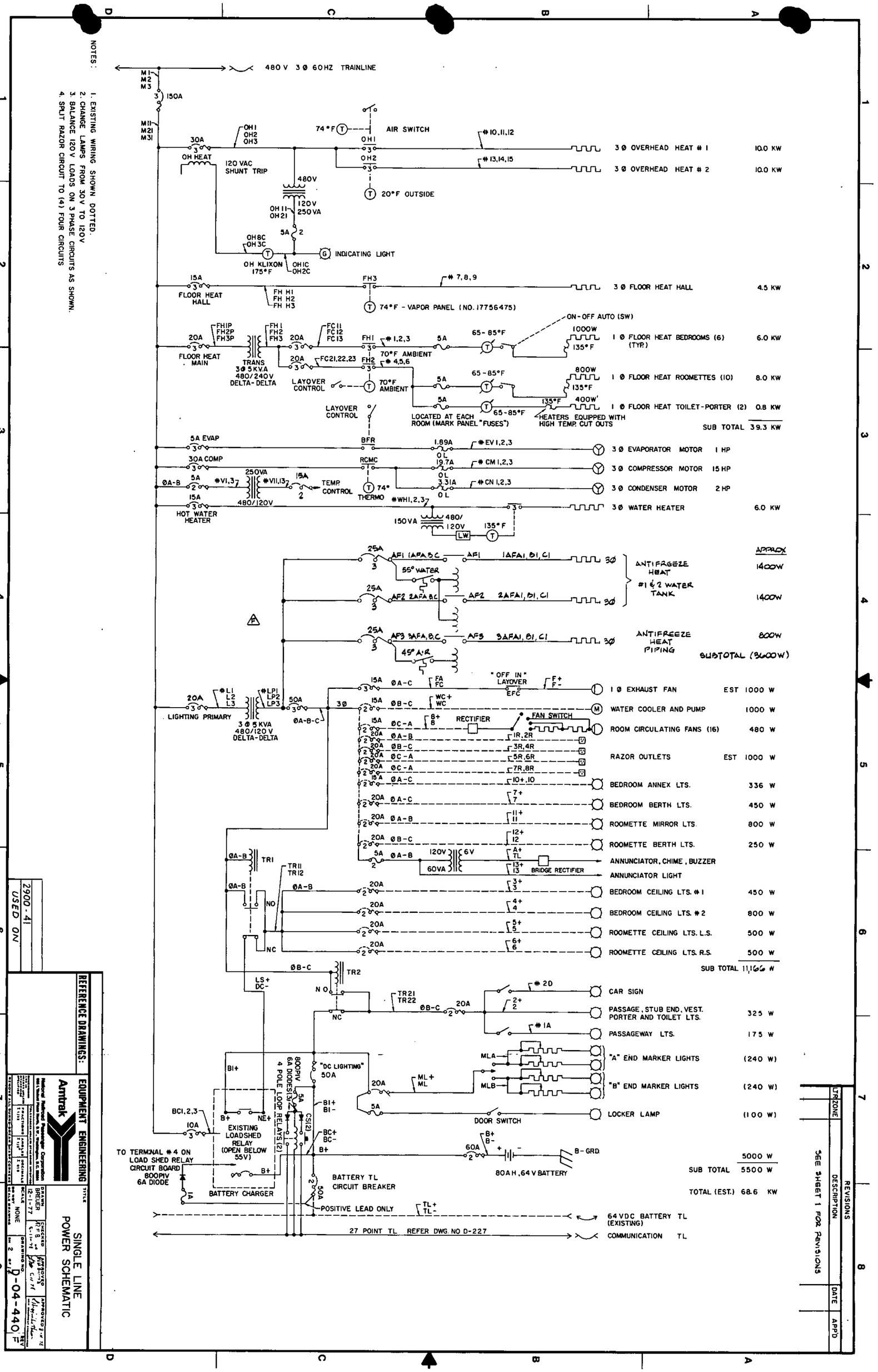
NOTES:
1. EXISTING WIRING SHOWN DOTTED.
2. CHANGE LAMPS FROM 30V TO 120V
3. BALANCE 120V LOADS ON 3 PHASE CIRCUITS AS SHOWN.
4. SPLIT RAZOR CIRCUIT TO (4) FOUR CIRCUITS
480 V 3Ø 60HZ TRAINLINE
AIR SWITCH
3Ø OVERHEAD HEAT # 1 10.0 KW
3Ø OVERHEAD HEAT # 2 10.0 KW
120 VAC SHUNT TRIP
20°F OUTSIDE
INDICATING LIGHT
OH KLIXON 175°F
3Ø FLOOR HEAT HALL 4.5 KW
74°F - VAPOR PANEL (NO. 17756475)
ON-OFF AUTO (SW)
1Ø FLOOR HEAT BEDROOMS (6) (TYP.) 6.0 KW
1Ø FLOOR HEAT ROOMETTES (10) 8.0 KW
1Ø FLOOR HEAT TOILET-PORTER (2) 0.8 KW
SUB TOTAL 39.3 KW
LOCATED AT EACH ROOM (MARK PANEL "FUSES")
HEATERS EQUIPPED WITH HIGH TEMP. CUT OUTS
3Ø EVAPORATOR MOTOR 1 HP
3Ø COMPRESSOR MOTOR 15 HP
3Ø CONDENSER MOTOR 2 HP
3Ø WATER HEATER 6.0 KW
TRANS 3Ø 5KVA 480/240V DELTA-DELTA
LAYOVER CONTROL
TEMP. CONTROL
HOT WATER HEATER
ANTIFREEZE HEAT #1 & 2 WATER TANK
ANTIFREEZE HEAT PIPING
SUBTOTAL (3600W)
APPROX
1Ø EXHAUST FAN EST 1000 W
WATER COOLER AND PUMP 1000 W
ROOM CIRCULATING FANS (16) 480 W
RAZOR OUTLETS EST 1000 W
BEDROOM ANNEX LTS. 336 W
BEDROOM BERTH LTS. 450 W
ROOMETTE MIRROR LTS. 800 W
ROOMETTE BERTH LTS. 250 W
ANNUNCIATOR, CHIME, BUZZER
ANNUNCIATOR LIGHT
BEDROOM CEILING LTS. #1 450 W
BEDROOM CEILING LTS. #2 800 W
ROOMETTE CEILING LTS. L.S. 500 W
ROOMETTE CEILING LTS. R.S. 500 W
SUB TOTAL 11,166 W
LIGHTING PRIMARY
3Ø 5KVA 480/120V DELTA-DELTA
RECTIFIER
FAN SWITCH
BRIDGE RECTIFIER
CAR SIGN
PASSAGE, STUB END, VEST. PORTER AND TOILET LTS. 325 W
PASSAGEWAY LTS. 175 W
"A" END MARKER LIGHTS (240 W)
"B" END MARKER LIGHTS (240 W)
LOCKER LAMP (100 W)
DOOR SWITCH
"DC LIGHTING" 50A
EXISTING LOADSHED RELAY (OPEN BELOW 55V)
TO TERMINAL #4 ON LOAD SHED RELAY CIRCUIT BOARD 800PIV 6A DIODE
BATTERY CHARGER
BATTERY TL CIRCUIT BREAKER
POSITIVE LEAD ONLY
80AH, 64V BATTERY
5000 W
SUB TOTAL 5500 W
TOTAL (EST.) 68.6 KW
64VDC BATTERY TL (EXISTING)
27 POINT TL REFER DWG. NO D-227
COMMUNICATION TL
REVISIONS
LTR ZONE DESCRIPTION DATE APP'D
SEE SHEET 1 FOR REVISIONS
REFERENCE DRAWINGS:
EQUIPMENT ENGINEERING
Amtrak
SINGLE LINE POWER SCHEMATIC
D-04-440
2900-41
USED ON

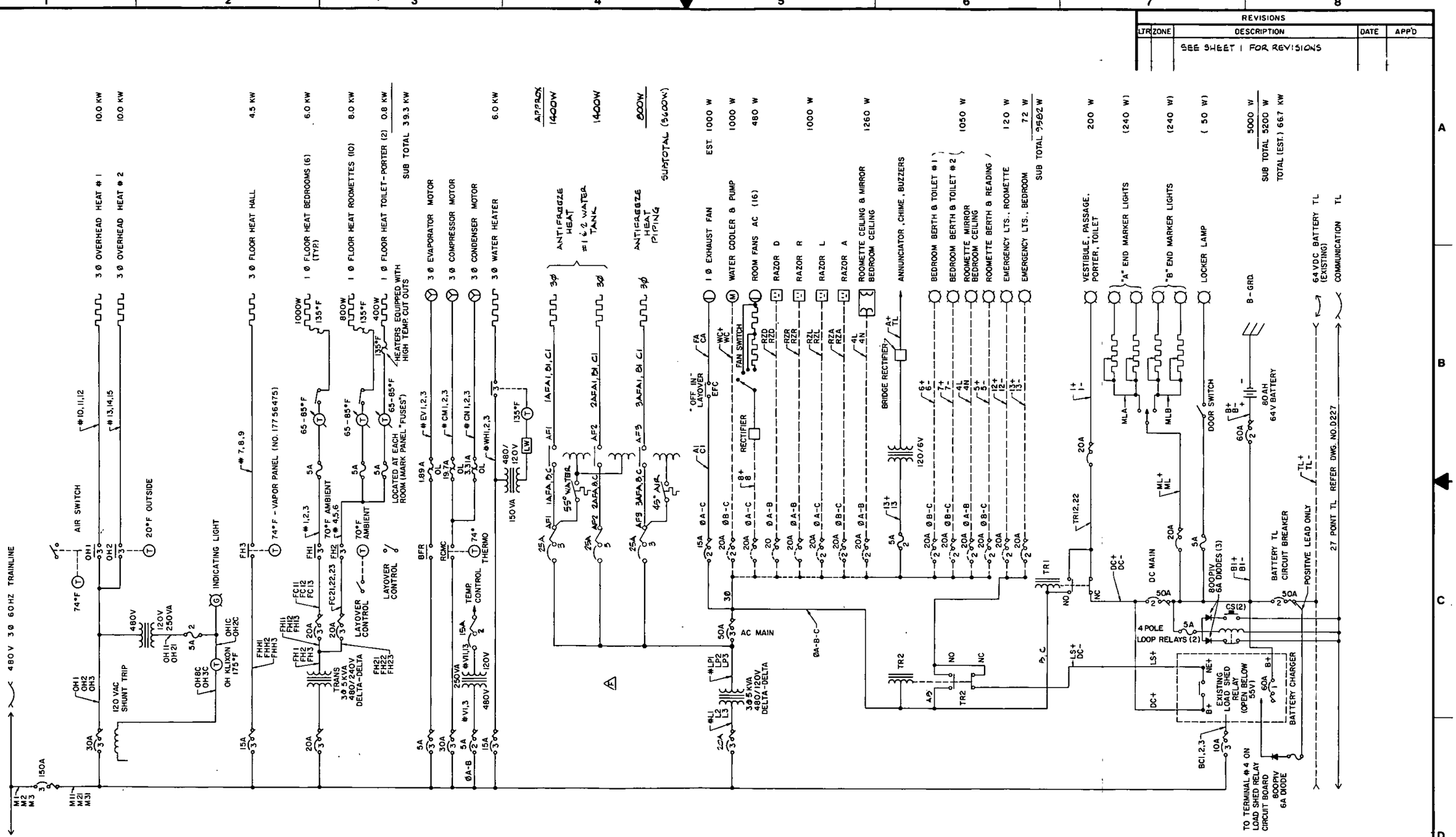

NOTES:
1. EXISTING WIRING SHOWN DOTTED.
2. CHANGE LAMPS FROM 30V TO 120V
3. BALANCE 120V LOADS ON 3 PHASE CIRCUITS AS SHOWN

REVISIONS				
LTR	ZONE	DESCRIPTION	DATE	APP'D
		SEE SHEET 1 FOR REVISIONS		

REFERENCE DRAWINGS:

EQUIPMENT ENGINEERING
Amtrak
National Railroad Passenger Corporation
400 L'Enfant Plaza North, S.W., Washington, D.C. 20024

TITLE: SINGLE LINE POWER SCHEMATIC

DRAWN	CHECKED	APPROVED	APPROVED
BREUER 1-11-76	R.W.B. 8-11-76		

SCALE: NONE — DO NOT SCALE DRAWING
DRAWING NO: D-04-440 SH 3 OF 12 REV F

2980-97
USED ON

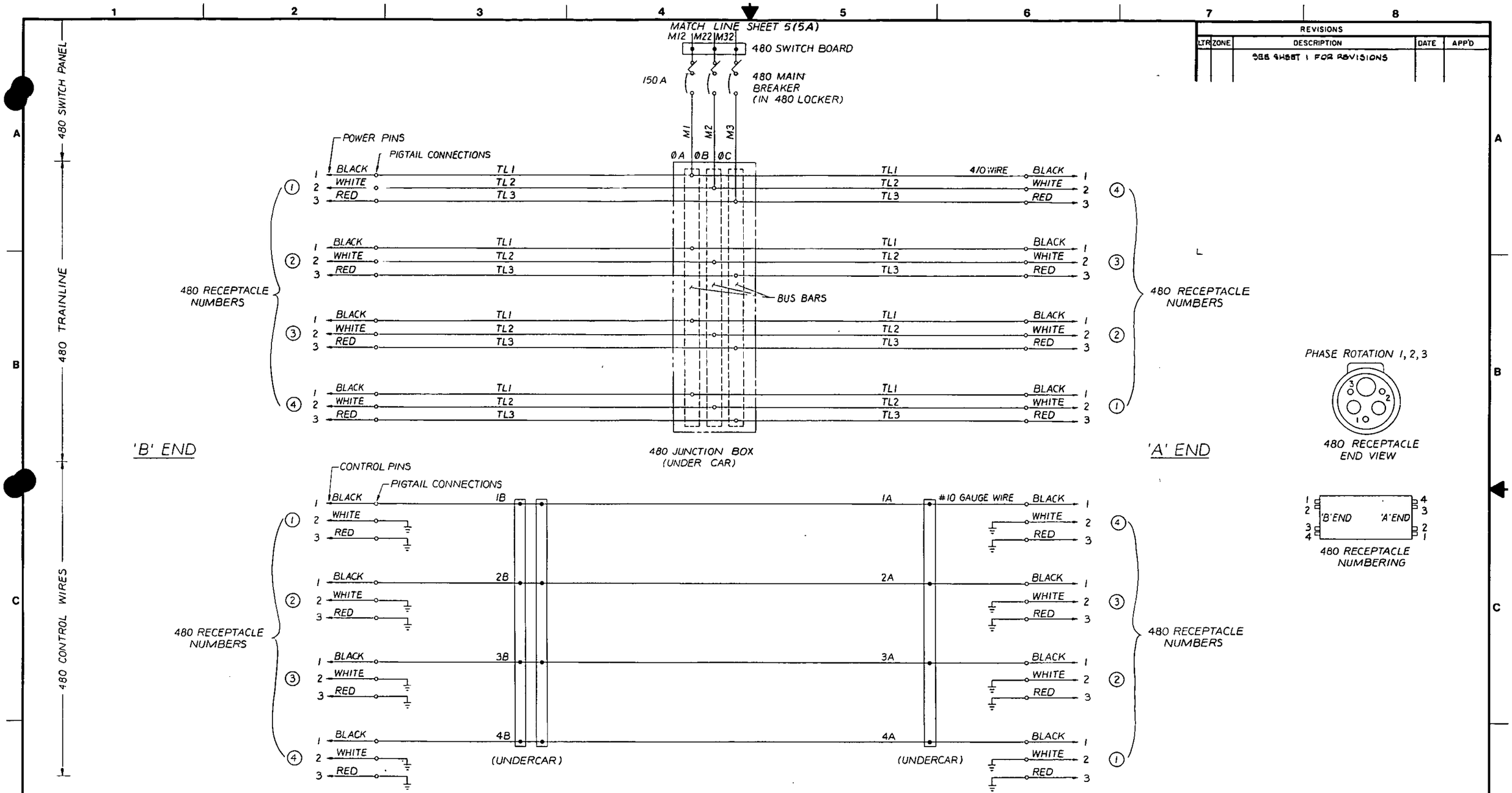

REVISIONS				
LTR	ZONE	DESCRIPTION	DATE	APP'D
		SEE SHEET 1 FOR REVISIONS		

REFERENCE DRAWINGS:

EQUIPMENT ENGINEERING
Amtrak
National Railroad Passenger Corporation

TITLE
480 MAIN TRAINLINE POWER SCHEMATIC

DRAWN 5-18-78 | CHECKED RFB 9-11-78 | APPROVED | APPROVED

SCALE NONE | DRAWING NO D-04-440 | SH. 4 OF 14 | REV F

2900-97
USED ON

MATCH LINE SHEET 6

WATER HEATER CONTROL

WATER HEATER

WH1

JUMPER

H1 H3 H2 H4

1/2AMP

X2 XF X1

WATER HEATER CONTROL TRANSFORMER 480/120 150VA

2 3 1 5

WLR

WATER PROBE

6 7 3 4 WHC 2 1

WLR ECO 105Ω ECO(HIGH TEMPERATURE CUTOUT)

WATER THERMOSTAT CLOSED BELOW 120°F

480V 3Ø BUSS WATER HEATER

WH1 WHC 6.25A BLACK 3KW

15A WH2 BLACK 72Ω

WH3 RED 72Ω

6.25A RED 3KW

AB 702LB0D93

HEATER ELEMENTS MIN 25 MEG OHM TO GROUND

MATCH LINE 11 & 12

LPS LP2 LP1

PANEL T.B. UNDERCAR J-BOX

1AFA AF1 1AFA1 1 AB

1AFB 1AFB1 2 BC

1AFC 1AFC1 3 AC

25A 39Ω

WATER TANK #1

HEAT TAPE IS NOMINAL 8 W/FOOT

55C

55B .002 < 55° WATER

2AFA AF2 2AFA1 4 AB

2AFB 2AFB1 5 BC

2AFC 2AFC1 6 AC

25A 39Ω

WATER TANK #2

WATER TANKS

3AFA AF3 3AFA1 10 AB RIGHT 33FT

3AFB 3AFB1 11 BC CENTER 34FT

3AFC 3AFC1 12 AC LEFT 33FT

25A 39Ω

PIPING

45C

45B .002 < 45° OUTSIDE AIR

ANTIFREEZE HEAT TAPE

AF1, AF2, AF3 : GE CR205C022

MATCH LINE SHEET 4

2900-97 USED ON

REVISIONS

LTR	ZONE	DESCRIPTION	DATE	APP'D

REFERENCE DRAWINGS:

EQUIPMENT ENGINEERING

Amtrak

National Railroad Passenger Corporation

TITLE: WATER SYSTEM ANTIFREEZE SCHEMATIC

DRAWN 12-13-78 CHECKED APPROVED 12-14-78 APPROVED 12-19-78

SCALE DO NOT SCALE DRAWING

DRAWING NO D-04-440 REV F

SH 5 OF 14

97

REVISIONS			
LTR ZONE	DESCRIPTION	DATE	APP'D
	SEE SHEET 1 FOR REVISIONS		

MATCH LINE SHEET 5

480V 3Ø BUSS

M12 M22 M32

SELECTOR SWITCH CHART

1543288-05 CONTROL SWITCH

CIRCUITS CLOSED		1	2	3	4	5	6	7	8	9	10	11	12
POSITION													
DAY		L2	●		●						●	●	
NIGHT	COOL	L1	●			●							
OFF-LAYOVER		C		●				●					
NIGHT	HEAT	R1	●	●			●						
DAY		R2	●	●	●		●	●				●	

(THERMO-STAT PLUG) (OVERHEAD) (ELECTRIC LOCKER) (SWITCH LOCKER)

COOL MOD 76°F — TD, TB, TA, TC — D, B, A, C — 3K, 20K, H, CMR 5170Ω

PARTIAL COOLING 74°F — TP, TK, TJ, TL — P, K, J, L — 3K, 20K, 8, 9, 3K, HCR 5170Ω

LAYOVER 50°F — TS, TR — S, R — 7

HALL FLOOR HEAT 74°F — TU, TW, TV, TT — U, W, V, T — 6, 5, 20K, 55K, HCR

DUCT HEAT 74°F — TH, TF, TE, TG — H, F, E, G — 3K, 55K, 20K, 10, DR 5170Ω, DR

THERMOSTATS

SELECTOR SWITCH (SWITCH LOCKER)

TEMPERATURE CONTROL PANEL

PILOT RELAYS

10A CONTROL

10A TEMP CONTROL

STOP — 30 MINUTE TDR 5 2 6 10 — START — COOL OVRD — TDR 3 1

COOL MOD.

CMR

HCR 4

11 TDR COOL 9

HP/LP

FLOOR HEAT

HCR 3

HCR 12

DUCT HEAT 1

DR 2

BLOWER FAN

-120V

+120V

A B C D E F G H J K L M

(ELECTRIC LOCKER) OPEN ABOVE 235PSIG

EVAPORATOR SOLENOID VALVE 69Ω

OUTSIDE THERMOSTAT CLOSED ABOVE 50°F

MANUAL SWITCH MAN AUTO — HIGH LOW PRESSURE

OPEN ABOVE 275PSIG — OPEN BELOW 2-5PSIG

FH3 105Ω — FH1 105Ω — FH2 105Ω

OUTSIDE CLOSED BELOW 70°F — KT

EMERGENCY FAN SWITCH — EFC 105Ω

OUTSIDE THER. CLOSED BE-LOW 20°F

AIR VANE SWITCH — VS2 VS1

(ELECTRIC LOCKER) SAFETY CONTACTOR PANEL

B B T T 3 — RCMC OL3 OL2 BFMS 7Ω

GI 7 — BFMS OL1 44Ω

FDT 6 — HC2 HC1 39Ω 39Ω

F 5

VS2 4

VS1 2 — BFMS

OH1

OH3

H1 — LINK H3 H2 H4 — CT3 480/120V TEMP. CONTROL 250VA TRANSFORMER (ELECTRIC LOCKER)

X2 X1

15A

120VAC OH2C

120VAC OH1C

SHUNT TRIP THERMOSTAT CLOSED ABOVE 200°F OH3C

(480 SWITCH BOARD) (ELECTRIC LOCKER) (SWITCH LOCKER)

GW 250Ω

V1 — VAPOR 5A — V3

H1 — LINK H3 H2 H4 — CT1 480/120V TEMP. CONTROL 250 VA TRANSFORMER (ELECTRIC LOCKER)

X2 X1

V11 V13 — 15A "VAPOR"

OVERHEAD HEAT 30A — OH1 OH2 OH3 — HC1 HC2

SHUNT TRIP COIL — GE CR 205C022

10 11 12 13 14 15 — 12A

OVERHEAD HEAT

DELTA WYE

OVERHEAD

OVERHEAD HEAT

EVAPORATOR 5A BFMS OL1 — 16A

GE CR 206B022 — C 2.20A

EV1 EV2 EV3

PIGTAILS ON MOTOR

EVAPORATOR 1 HP

2400 CFM

WYE CONNECTED OVERHEAD HEAT

COMPRESSOR/CONDENSER 30A RCMC OL2 — 19A

GE CR 206D022 — C 21.4B

CM1 CM2 CM3

COMPRESSOR 15 HP

OL3 — 3.1A

CN1 CN2 CN3

CONDENSOR 2 HP

C 3.56A

480 SWITCH PANEL

DELTA CONNECTED OVERHEAD HEAT

A/C SYSTEM

A/C PRESSURE CONTROL BOX

ALTERNATE MANUAL SWITCH (PUSHBUTTON TYPE)

MANUAL SWITCH (ROTARY TYPE)

LOW PRESSURE SWITCH SET AT 2-5 PSIG

HIGH PRESSURE SWITCH SET AT 275PSIG

CONTACTORS

RCMC	A/C COMPRESSOR & CONDENSER MOTORS
BFMS	BLOWER FAN MOTOR
HC1	1ST STAGE OVERHEAD HEAT
HC2	2ND STAGE OVERHEAD HEAT
FH1	FLOOR HEAT BEDROOM
FH2	FLOOR HEAT ROOMETTE
FH3	FLOOR HEAT HALL
EFC	EXHAUST FAN MOTOR

MATCH LINE SHEET 7

2900-97 USED ON

REFERENCE DRAWINGS:
D-01-475 TEMP CONTROL PANEL SCHEM
5-00-474 TEMP CONTROL PANEL

EQUIPMENT ENGINEERING — Amtrak — National Railroad Passenger Corporation

TITLE: SCHEMATIC WIRING AIR CONDITIONING AND HEATING CONTROLS

DRAWN 5-24-78 — CHECKED REG 6-11-78 — APPROVED 6-11-78

SCALE NONE — DRAWING NO D-04-440 — SH. 6 OF 14 — REV F

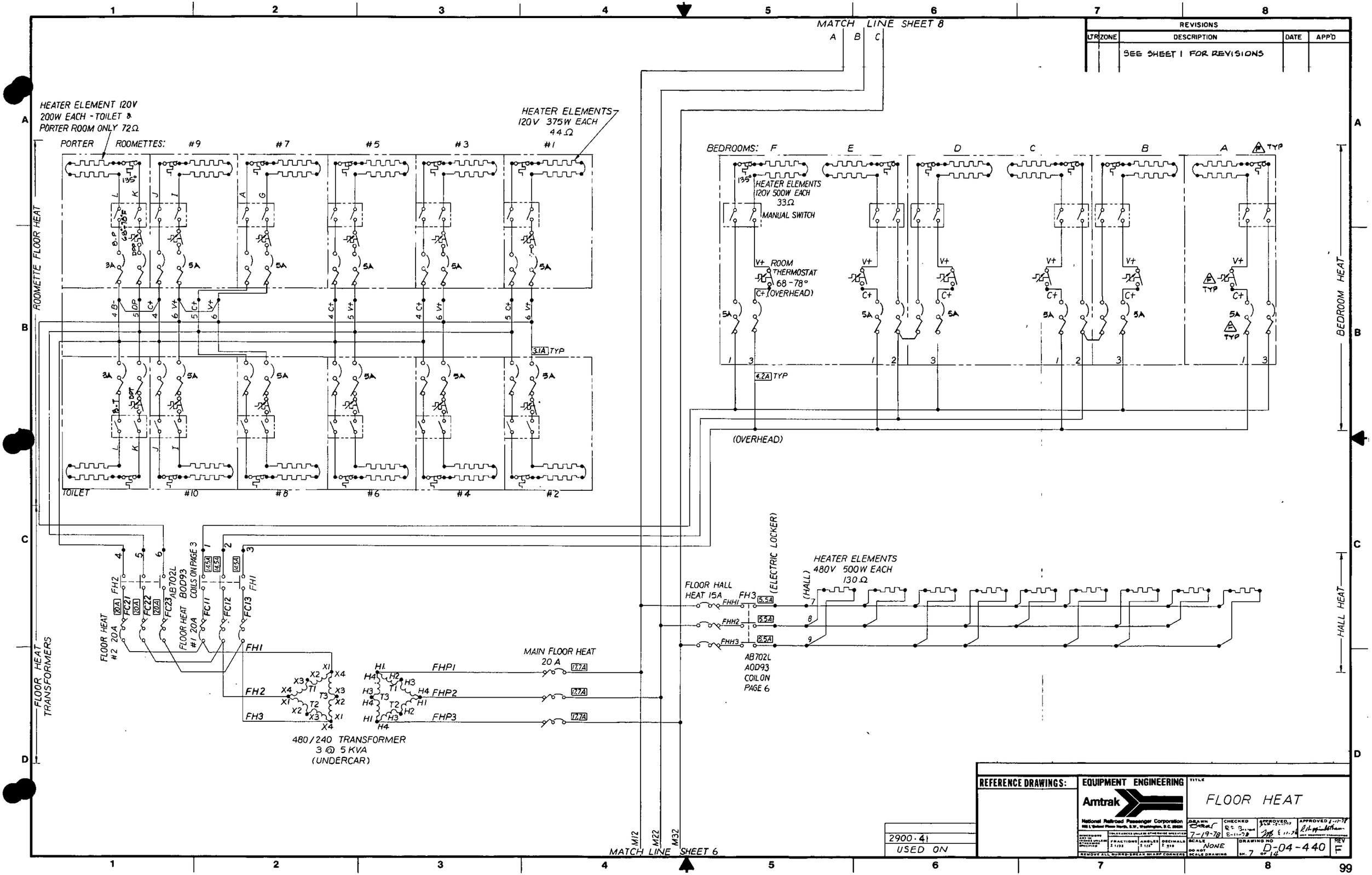

REVISIONS				
LTR	ZONE	DESCRIPTION	DATE	APP'D
		SEE SHEET 1 FOR REVISIONS		

REFERENCE DRAWINGS:

EQUIPMENT ENGINEERING
Amtrak
National Railroad Passenger Corporation

TITLE: FLOOR HEAT

DRAWN 7-19-78 | CHECKED 8-11-78 | APPROVED | APPROVED

SCALE NONE | DRAWING NO D-04-440 | SH. 7 OF 14 | REV F

2900-41
USED ON

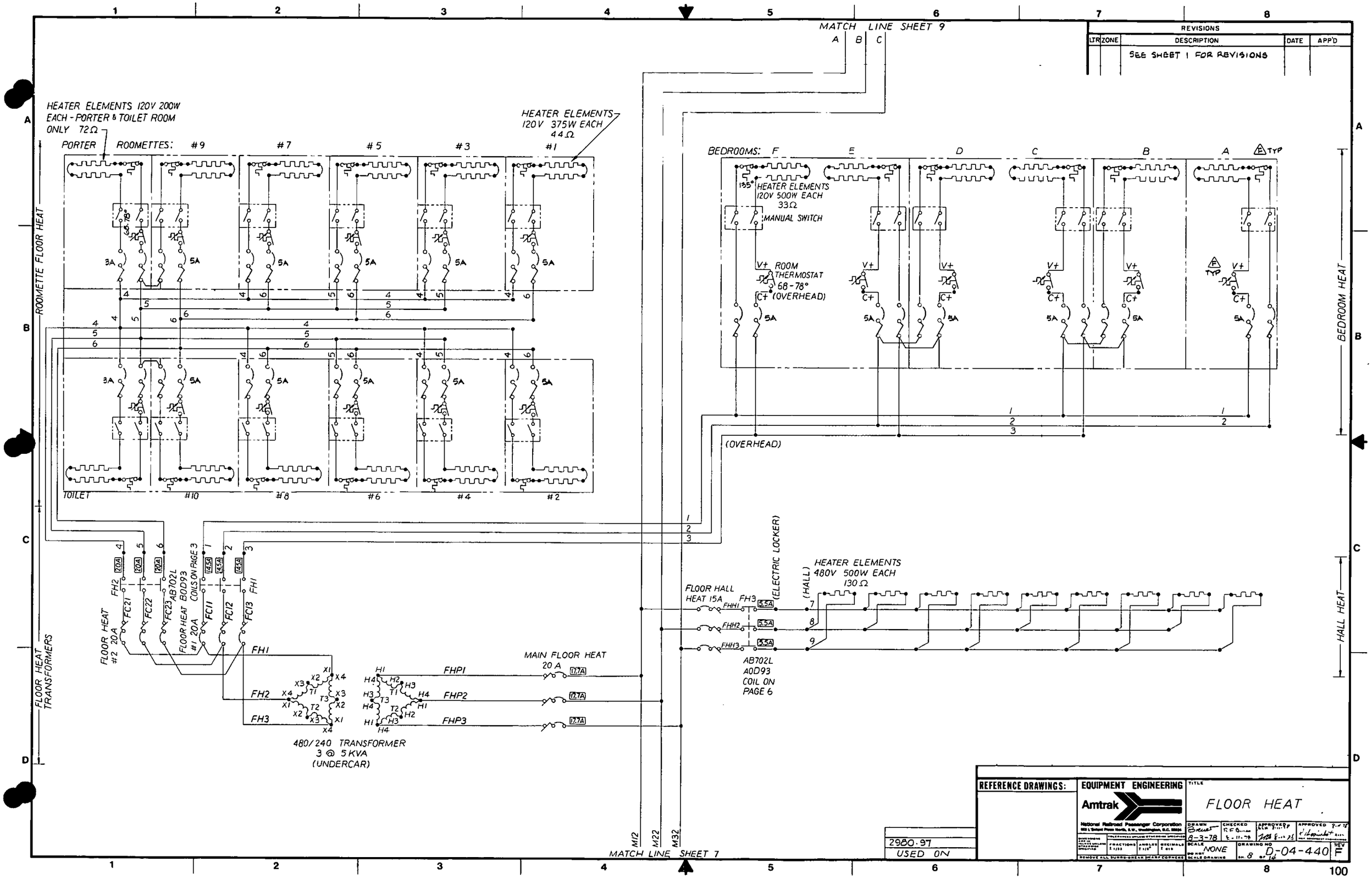

REVISIONS				
LTR	ZONE	DESCRIPTION	DATE	APP'D
		SEE SHEET 1 FOR REVISIONS		

2980.97
USED ON

REFERENCE DRAWINGS:

EQUIPMENT ENGINEERING
Amtrak
National Railroad Passenger Corporation

TITLE: FLOOR HEAT

DRAWN: 8-3-78 | CHECKED | APPROVED | APPROVED

SCALE: NONE | DRAWING NO: D-04-440 | SH. 8 OF 14 | REV F

100

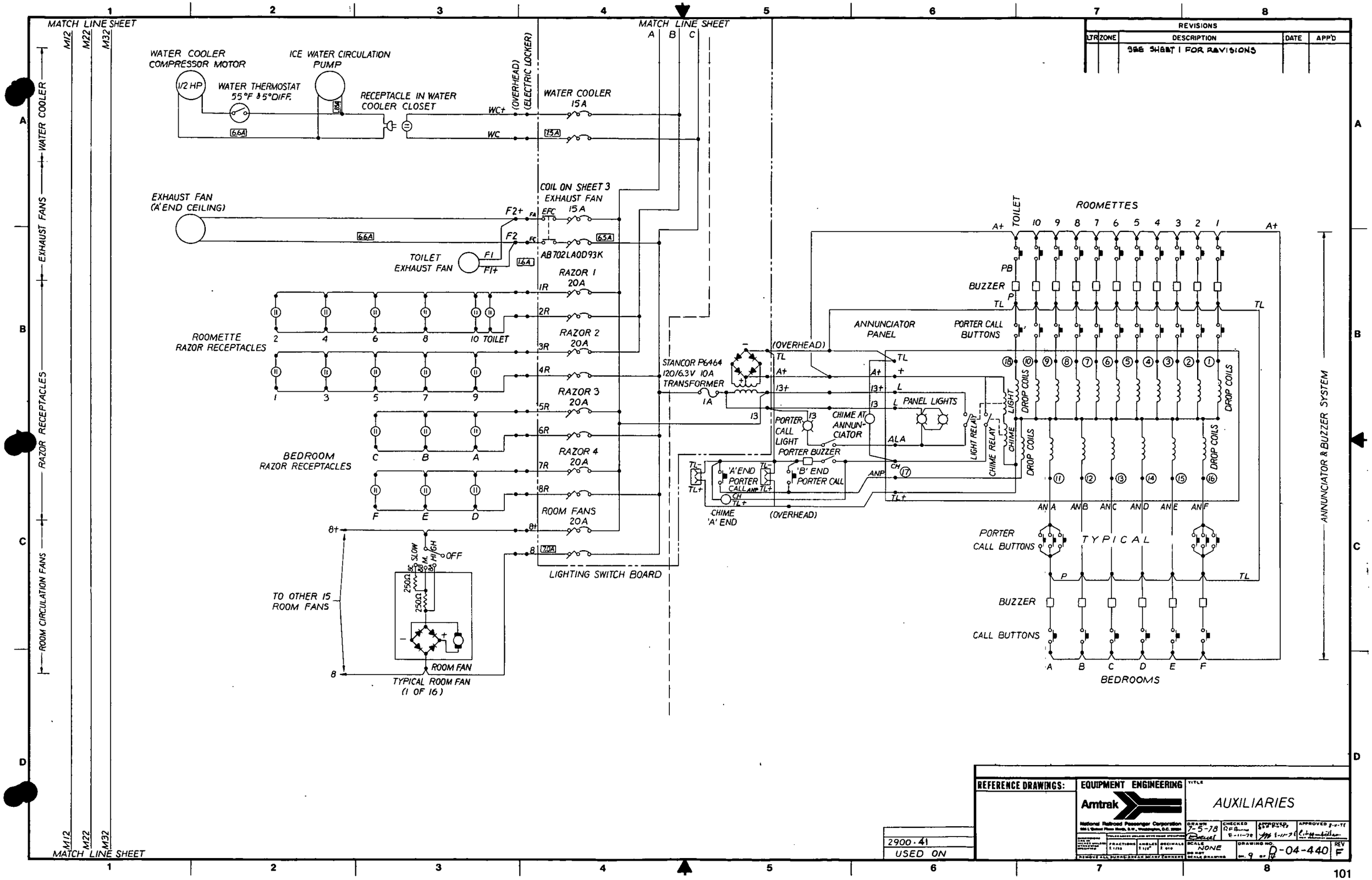

MATCH LINE SHEET
M12
M22
M32
WATER COOLER
EXHAUST FANS
RAZOR RECEPTACLES
ROOM CIRCULATION FANS
WATER COOLER COMPRESSOR MOTOR
1/2 HP
WATER THERMOSTAT 55°F & 5°DIFF.
ICE WATER CIRCULATION PUMP
RECEPTACLE IN WATER COOLER CLOSET
WC+
WC
(OVERHEAD)
(ELECTRIC LOCKER)
WATER COOLER 15A
EXHAUST FAN (A'END CEILING)
COIL ON SHEET 3 EXHAUST FAN 15A
F2+
F2
EFC
AB702LA0D93K
TOILET EXHAUST FAN
F1
F1+
RAZOR 1 20A
RAZOR 2 20A
RAZOR 3 20A
RAZOR 4 20A
ROOM FANS 20A
ROOMETTE RAZOR RECEPTACLES
BEDROOM RAZOR RECEPTACLES
TO OTHER 15 ROOM FANS
SLOW
HIGH
OFF
ROOM FAN
TYPICAL ROOM FAN (1 OF 16)
LIGHTING SWITCH BOARD
STANCOR P6464 120/6.3V 10A TRANSFORMER
1A
(OVERHEAD)
PORTER CALL LIGHT
CHIME AT ANNUNCIATOR
PORTER BUZZER
'A' END PORTER CALL
'B' END PORTER CALL
CHIME 'A' END
ANNUNCIATOR PANEL
PANEL LIGHTS
LIGHT RELAY
CHIME RELAY
LIGHT
CHIME
DROP COILS
ROOMETTES
TOILET
BUZZER
PORTER CALL BUTTONS
TYPICAL
BEDROOMS
ANNUNCIATOR & BUZZER SYSTEM
REVISIONS
LTR ZONE DESCRIPTION DATE APP'D
SEE SHEET 1 FOR REVISIONS
REFERENCE DRAWINGS:
EQUIPMENT ENGINEERING
Amtrak
National Railroad Passenger Corporation
TITLE
AUXILIARIES
DRAWN 7-5-78
CHECKED
APPROVED
SCALE NONE
DRAWING NO. D-04-440
REV F
2900-41
USED ON

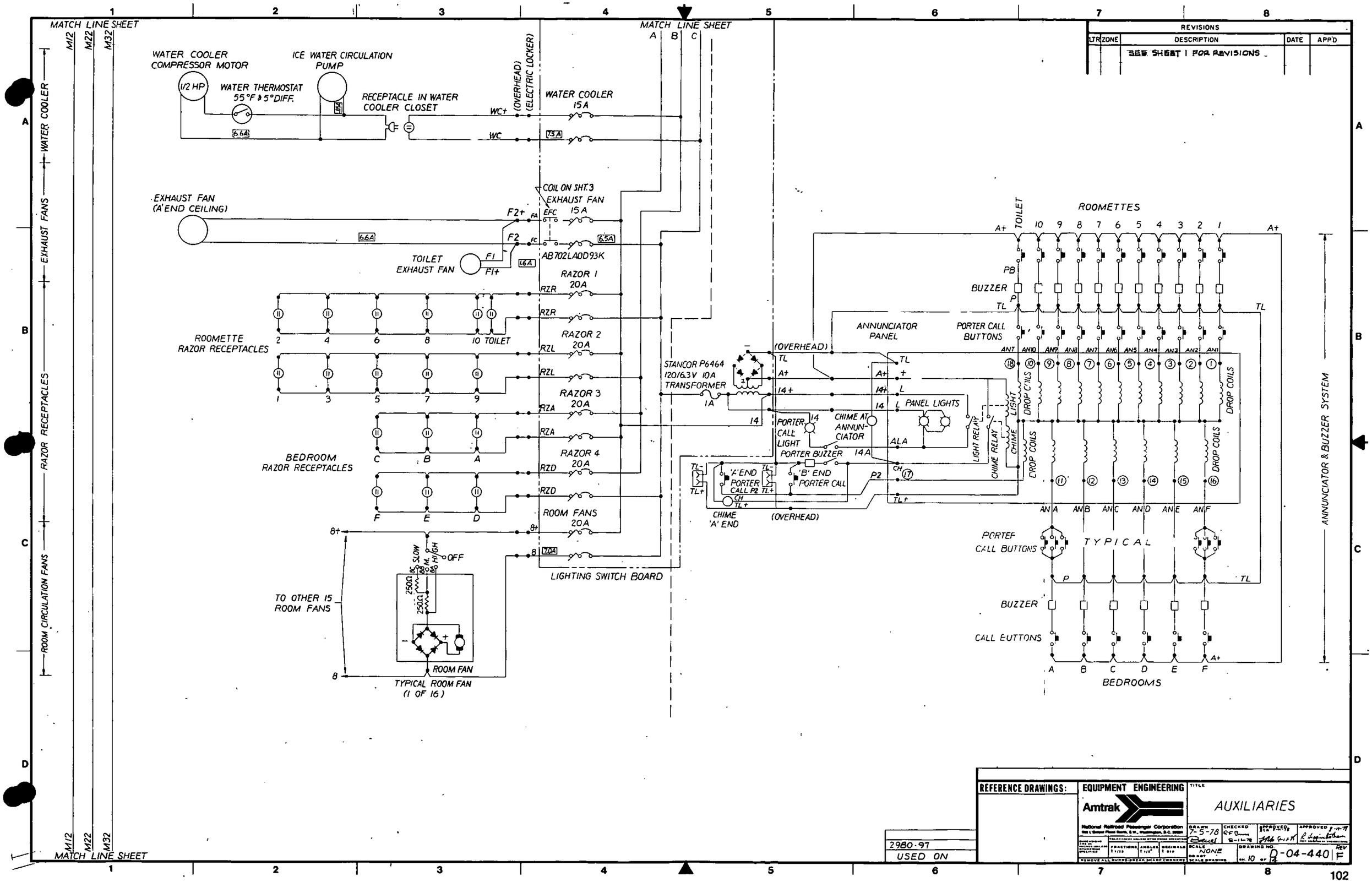

MATCH LINE SHEET
M12
M22
M32
WATER COOLER
EXHAUST FANS
RAZOR RECEPTACLES
ROOM CIRCULATION FANS
WATER COOLER COMPRESSOR MOTOR
1/2 HP
WATER THERMOSTAT 55°F & 5°DIFF.
ICE WATER CIRCULATION PUMP
RECEPTACLE IN WATER COOLER CLOSET
WC+
WC
(OVERHEAD)
(ELECTRIC LOCKER)
WATER COOLER 15A
EXHAUST FAN (A'END CEILING)
COIL ON SHT.3
EXHAUST FAN 15A
F2+
F2
EFC
AB702LAOD93K
TOILET EXHAUST FAN
F1
F1+
RAZOR 1 20A
RAZOR 2 20A
RAZOR 3 20A
RAZOR 4 20A
ROOM FANS 20A
ROOMETTE RAZOR RECEPTACLES
BEDROOM RAZOR RECEPTACLES
TO OTHER 15 ROOM FANS
SLOW
HIGH
OFF
ROOM FAN
TYPICAL ROOM FAN (1 OF 16)
LIGHTING SWITCH BOARD
STANCOR P6464 120/6.3V 10A TRANSFORMER
ANNUNCIATOR PANEL
PANEL LIGHTS
PORTER CALL LIGHT
CHIME AT ANNUNCIATOR
PORTER BUZZER
'A' END PORTER CALL
'B' END PORTER CALL
CHIME 'A' END
LIGHT RELAY
CHIME RELAY
LIGHT
DROP COILS
ROOMETTES
TOILET
BUZZER
PORTER CALL BUTTONS
TYPICAL
BEDROOMS
ANNUNCIATOR & BUZZER SYSTEM
REVISIONS
LTR ZONE DESCRIPTION DATE APP'D
SEE SHEET 1 FOR REVISIONS
2980-97
USED ON
REFERENCE DRAWINGS:
EQUIPMENT ENGINEERING
Amtrak
National Railroad Passenger Corporation
TITLE
AUXILIARIES
DRAWN 7-5-78
CHECKED
APPROVED
SCALE NONE
DRAWING NO. D-04-440
REV F
SH. 10 OF 14

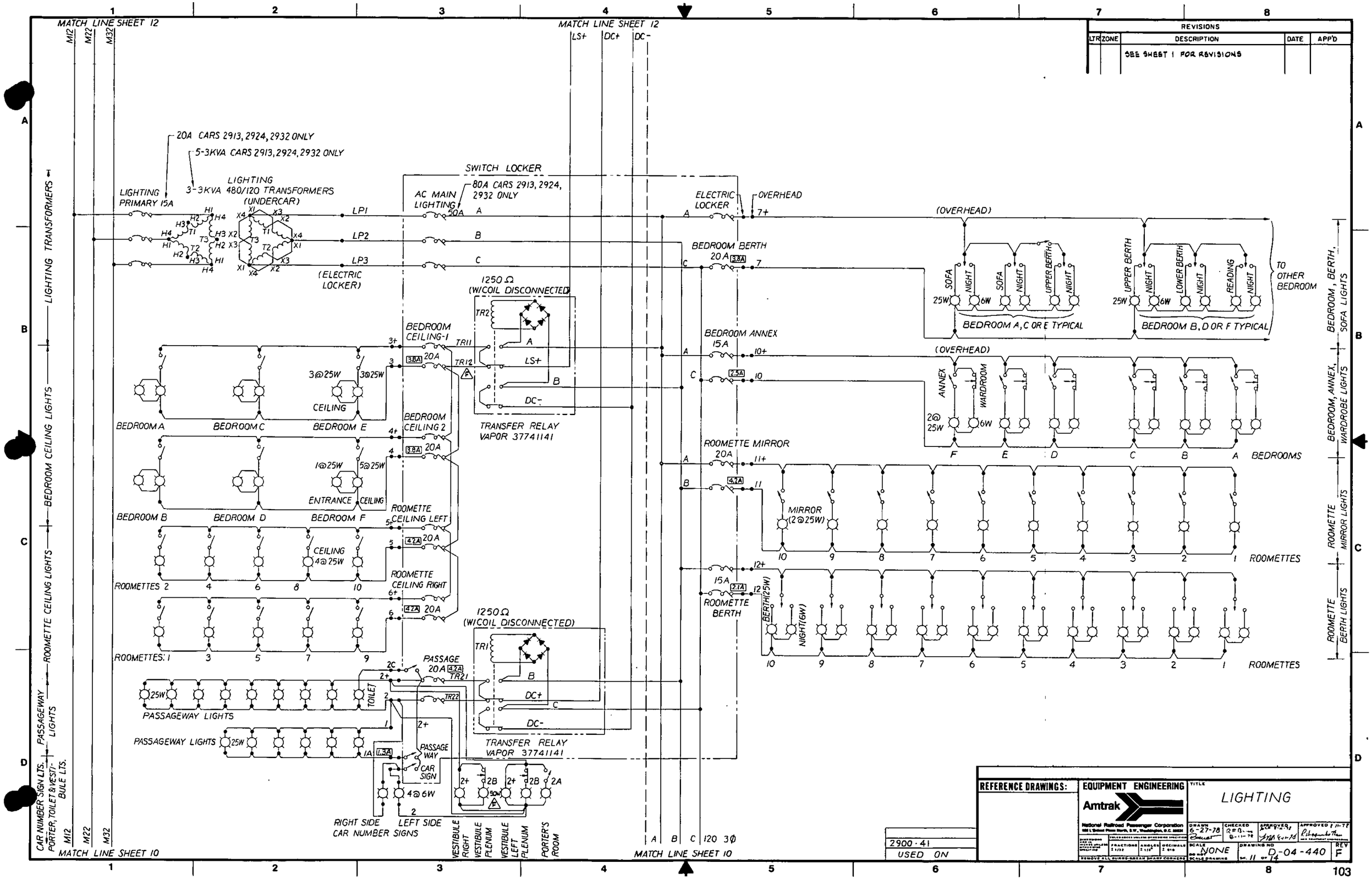

REVISIONS				
LTR	ZONE	DESCRIPTION	DATE	APP'D
		SEE SHEET 1 FOR REVISIONS		

REFERENCE DRAWINGS:

EQUIPMENT ENGINEERING
Amtrak
National Railroad Passenger Corporation

TITLE: LIGHTING

DRAWN 6-27-78 | CHECKED | APPROVED | APPROVED
SCALE NONE | DRAWING NO D-04-440 | REV F
SH. 11 OF 14

REVISIONS				
LTR	ZONE	DESCRIPTION	DATE	APP'D
		SEE SHEET 1 FOR REVISIONS		

MATCH LINE SHEET 13

M12 M22 M32

LS+ DC+ DC-

20A CAR 2997 ONLY

5-3KVA CAR 2997 ONLY

LIGHTING 3-3KVA 480/120 TRANSFORMERS (UNDERCAR)

LIGHTING PRIMARY 15A

LIGHTING TRANSFORMERS

SWITCH LOCKER

80A CAR 2997 ONLY

AC MAIN LIGHTING 50A

LP1 LP2 LP3

A B C

(ELECTRIC LOCKER)

ROOMETTE MIRROR, BEDROOM CEILING 20A

(ELECTRIC LOCKER) (OVERHEAD)

10.3A

4L 4N

MIRROR LIGHTS

CEILING LIGHT

1250Ω (W/COIL DISCONNECTED)

TR2

TRANSFER RELAY VAPOR 37741141

EMERGENCY ROOMETTE

5 20A

CEILING LIGHT SWITCH

EMG OFF ON

ROOMETTE EMERGENCY LIGHTING

6W

EMERGENCY BEDROOM

13 20A

CEILING LIGHT SWITCH

EMG OFF ON

BEDROOM EMERGENCY LIGHTING

13A 13B 6W

1250Ω (W/COIL DISCONNECTED)

TR1

TRANSFER RELAY VAPOR 37741141

PASSAGE PORTER

TR12 TR22

4.2 20A

TOILET, PORTER'S ROOM PLENUM LIGHTING

A/C PLENUMS

1D 25W

1B PORTER'S ROOM 25W

1A TOILET 25W

VESTIBULE & PASSAGE LIGHTS

PASSAGE 25W 50W

1E VESTIBULE

PASSAGE 25W

'A' END PLATFORM LIGHT 25W

CAR NUMBER SIGN LIGHTS

CAR NUMBER SIGNS 4 LAMPS PER SIGN @ 6W

1F

VESTIBULE & PASSAGE

PASSAGE

PLATFORM LIGHT

CAR NO. SIGNS

LIGHTING PANEL SWITCH IN LOCKER

ROOMETTE BERTH READ. 20A 2.1

READING 25W NIGHT 6W

ROOMETTES

BEDROOM, BERTH & ANNEX - 1 20A 6

BERTH SWITCH 3.9

UPPER BERTH READING 25W NIGHT 6W SOFA LIGHTS 6B 6W 6C 2@25W ANNEX WARDROBE

TYPICAL A BEDROOMS

BEDROOM, BERTH & ANNEX - 2 20A 7 3.5

READING 25W NIGHT 6W READING LIGHTS 7B 6W 2@25W ANNEX WARDROBE

TYPICAL B BEDROOMS

CEILING LIGHTING ROOMETTE MIRROR

ROOMETTE BERTH LIGHTS

BEDROOM SOFA BERTH, ANNEX & WARDROBE LIGHTS

BEDROOM LIGHTS

MATCH LINE SHEET 11

A B C

MATCH LINE SHEET 11

REFERENCE DRAWINGS:

2980-97 USED ON

EQUIPMENT ENGINEERING

Amtrak

National Railroad Passenger Corporation

TITLE

LIGHTING PINE ONLY - FORMERLY 2700

DRAWN 7-28-78 CHECKED REB 8-11-78 APPROVED 8-11-78 APPROVED 8-11-78

SCALE NONE

DRAWING NO D-04-440 REV F

SH. 12 OF 14

DO NOT SCALE DRAWING

REMOVE ALL BURRS-BREAK SHARP CORNERS

104

MATCH LINE SHEET 14

DC- DC+

BATTERY TRAINLINE

BATTERY CHARGER

'B' END + ~

'A' END + −

BATTERY TRAINLINE RECEPTACLE

BATTERY 60A — BI+ — BATTERY BOX

BATTERY 64 VOLT 80 AHr 50 CELLS NiCd

(SWITCH LOCKER) BI− (ELECTRIC LOCKER)

AC1 AC2 AC3 BC1 BC2 BC3 UPPER CONDUIT

BB+ BB− B+ B− B+ NE+ LS+ CONDUIT DC+

BACK SIDE

1 2 3 4 TL+

LOAD SHED RELAY CIRCUIT BOARD

RELAY COIL Ω WITH COIL DISCONNECTED

FRONT SIDE

BATTERY CHARGER CONNECTIONS

TL− TL+ (ELECTRIC LOCKER)

TRAINLINE 50A (SWITCH LOCKER) B+

B−

1A (SWITCH LOCKER) TERMINAL 4 ON LSR CIRCUIT BOARD

60A BB+ BC+ BC− DC MAIN 50A (SWITCH LOCKER)

45A← 70-80 VOLTS DC CHARGE

D33 C21 1400μfd

BB−

LOCKER LIGHTS 5A Z+ Z−

DOOR SWITCH

SWITCH LOCKER LIGHT ELECTRIC LOCKER LIGHT

BATTERY CHARGER 10A

BC1 6A AC1

BC2 6A AC2

BC3 6A AC3

LSR B+ DC+ NE+ LS+

CLOSED ABOVE 52 VOLTS BATTERY

(ELECTRIC LOCKER)

MARKER LIGHTS 20A 3.2A

'A' END OFF 'B' END MARKER LIGHT SWITCH (SWITCH LOCKER)

MLA MLB ML

ABOVE CEILING NEAR MARKER LIGHTS

SET TO 35VOLTS ON LAMP WITH 75 VOLTS ON CHARGER OUTPUT

(ELECTRIC LOCKER) (OVERHEAD)

'B' END MARKER LIGHTS

'A' END MARKER LIGHTS

BATTERY CHARGER MC GRAW EDISON AM 75-50-TC

M12 M22 M32

MATCH LINE SHEET 12

LS+ DC+ DC−

MATCH LINE SHEET 12

BATTERY — LOCKER LIGHTS — MARKER LIGHTS

REVISIONS				
LTR	ZONE	DESCRIPTION	DATE	APP'D
		SEE SHEET 1 FOR REVISIONS		

2900-97
USED ON

REFERENCE DRAWINGS:

EQUIPMENT ENGINEERING

Amtrak

National Railroad Passenger Corporation

TITLE: D.C. SYSTEM SCHEMATIC

DRAWN 6-9-78 Brewer | CHECKED RFB 8-11-78 | APPROVED 8-16-78 | APPROVED 1-17-79

SCALE NONE | DRAWING NO. D-04-440 | SH 13 OF 14 | REV F

REMOVE ALL BURRS-BREAK SHARP CORNERS

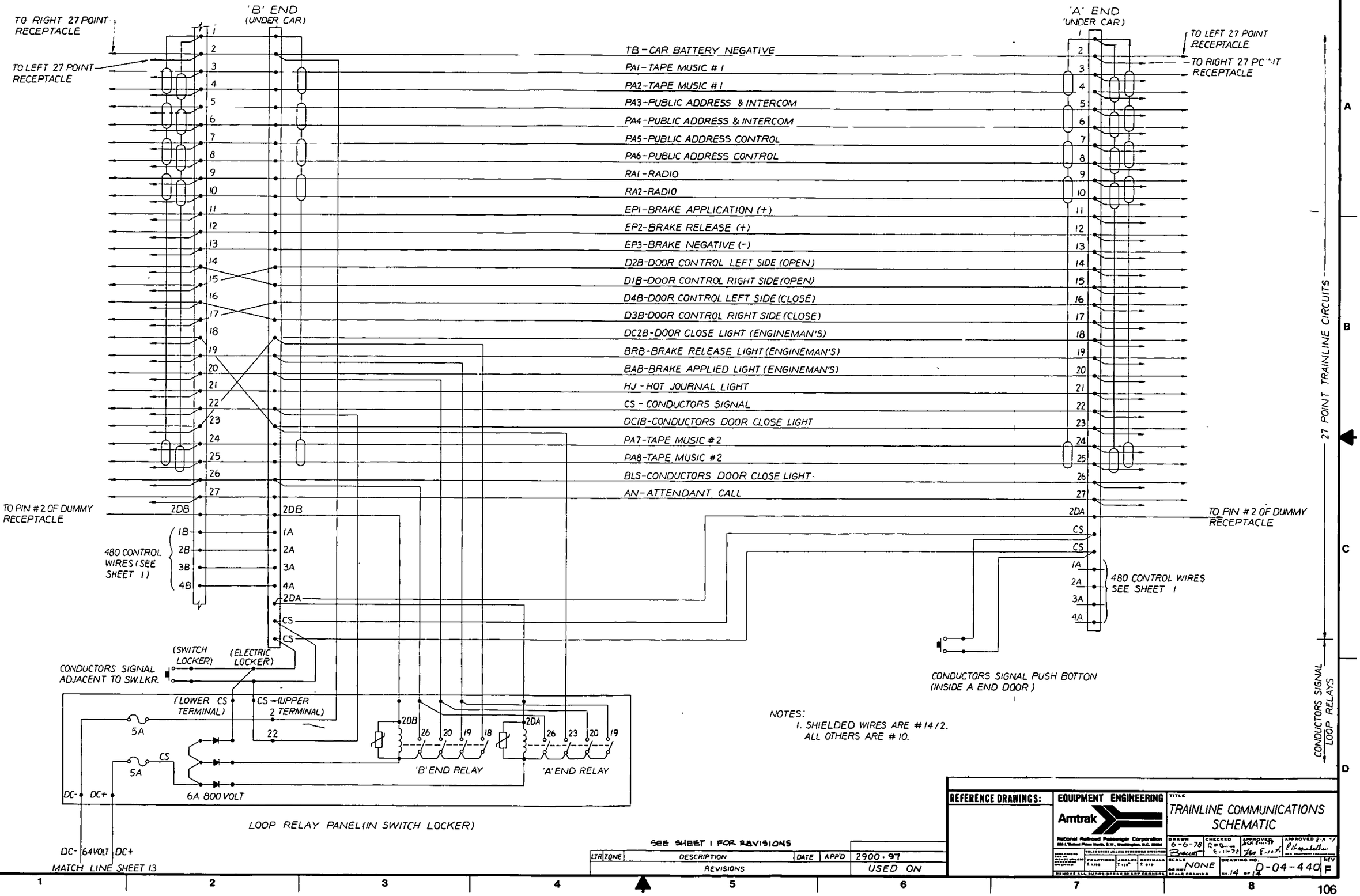

'B' END (UNDER CAR)
'A' END (UNDER CAR)
TO RIGHT 27 POINT RECEPTACLE
TO LEFT 27 POINT RECEPTACLE
TB - CAR BATTERY NEGATIVE
PA1 - TAPE MUSIC # 1
PA2 - TAPE MUSIC # 1
PA3 - PUBLIC ADDRESS & INTERCOM
PA4 - PUBLIC ADDRESS & INTERCOM
PA5 - PUBLIC ADDRESS CONTROL
PA6 - PUBLIC ADDRESS CONTROL
RA1 - RADIO
RA2 - RADIO
EP1 - BRAKE APPLICATION (+)
EP2 - BRAKE RELEASE (+)
EP3 - BRAKE NEGATIVE (-)
D2B - DOOR CONTROL LEFT SIDE (OPEN)
D1B - DOOR CONTROL RIGHT SIDE (OPEN)
D4B - DOOR CONTROL LEFT SIDE (CLOSE)
D3B - DOOR CONTROL RIGHT SIDE (CLOSE)
DC2B - DOOR CLOSE LIGHT (ENGINEMAN'S)
BRB - BRAKE RELEASE LIGHT (ENGINEMAN'S)
BAB - BRAKE APPLIED LIGHT (ENGINEMAN'S)
HJ - HOT JOURNAL LIGHT
CS - CONDUCTORS SIGNAL
DC1B - CONDUCTORS DOOR CLOSE LIGHT
PA7 - TAPE MUSIC # 2
PA8 - TAPE MUSIC # 2
BLS - CONDUCTORS DOOR CLOSE LIGHT
AN - ATTENDANT CALL
TO PIN # 2 OF DUMMY RECEPTACLE
480 CONTROL WIRES (SEE SHEET 1)
480 CONTROL WIRES SEE SHEET 1
27 POINT TRAINLINE CIRCUITS
CONDUCTORS SIGNAL LOOP RELAYS
CONDUCTORS SIGNAL ADJACENT TO SW.LKR.
(SWITCH LOCKER)
(ELECTRIC LOCKER)
(LOWER CS TERMINAL)
CS - (UPPER 2 TERMINAL)
5A
6A 800 VOLT
DC-
DC+
'B' END RELAY
'A' END RELAY
LOOP RELAY PANEL (IN SWITCH LOCKER)
DC- 64VOLT DC+
MATCH LINE SHEET 13
CONDUCTORS SIGNAL PUSH BOTTON (INSIDE A END DOOR)
NOTES:
1. SHIELDED WIRES ARE # 14/2.
ALL OTHERS ARE # 10.
SEE SHEET 1 FOR REVISIONS
LTR ZONE DESCRIPTION DATE APP'D
REVISIONS
2900-97
USED ON
REFERENCE DRAWINGS:
EQUIPMENT ENGINEERING
Amtrak
National Railroad Passenger Corporation
TITLE
TRAINLINE COMMUNICATIONS SCHEMATIC
DRAWN 6-6-78
CHECKED
APPROVED
SCALE NONE
DRAWING NO. D-04-440
SH. 14 OF 14
REV F

D-01-473

REVISIONS			
LTR	ZONE	DESCRIPTION	DATE	APP'D

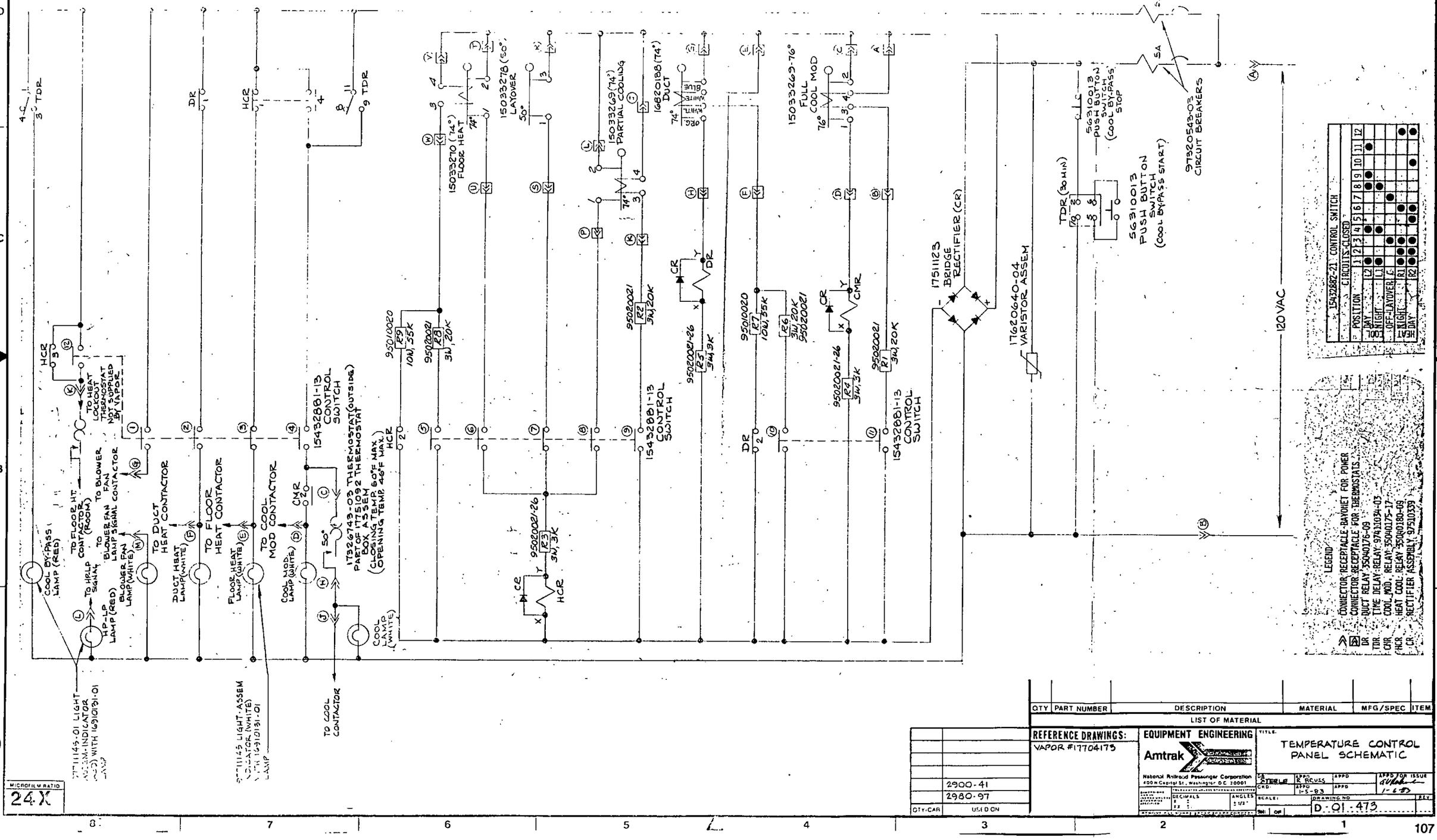

QTY	PART NUMBER	DESCRIPTION	MATERIAL	MFG/SPEC	ITEM

LIST OF MATERIAL

REFERENCE DRAWINGS:
VAPOR #17704173

2900-41
2980-97

QTY-CAR | USED ON

EQUIPMENT ENGINEERING
Amtrak
National Railroad Passenger Corporation
400 N Capitol St., Washington D.C. 20001

TITLE:
TEMPERATURE CONTROL
PANEL SCHEMATIC

DRWN	APPD	APPD	APPD FOR ISSUE
C. STEELE	K. ROUSS		
CKD.	APPD 1-5-83	APPD	

SCALE: | DRAWING NO. D-01-473 | REV

MICROFILM RATIO 24X

E-00474

REVISIONS			
LTR	ZONE	DESCRIPTION	DATE	APPD

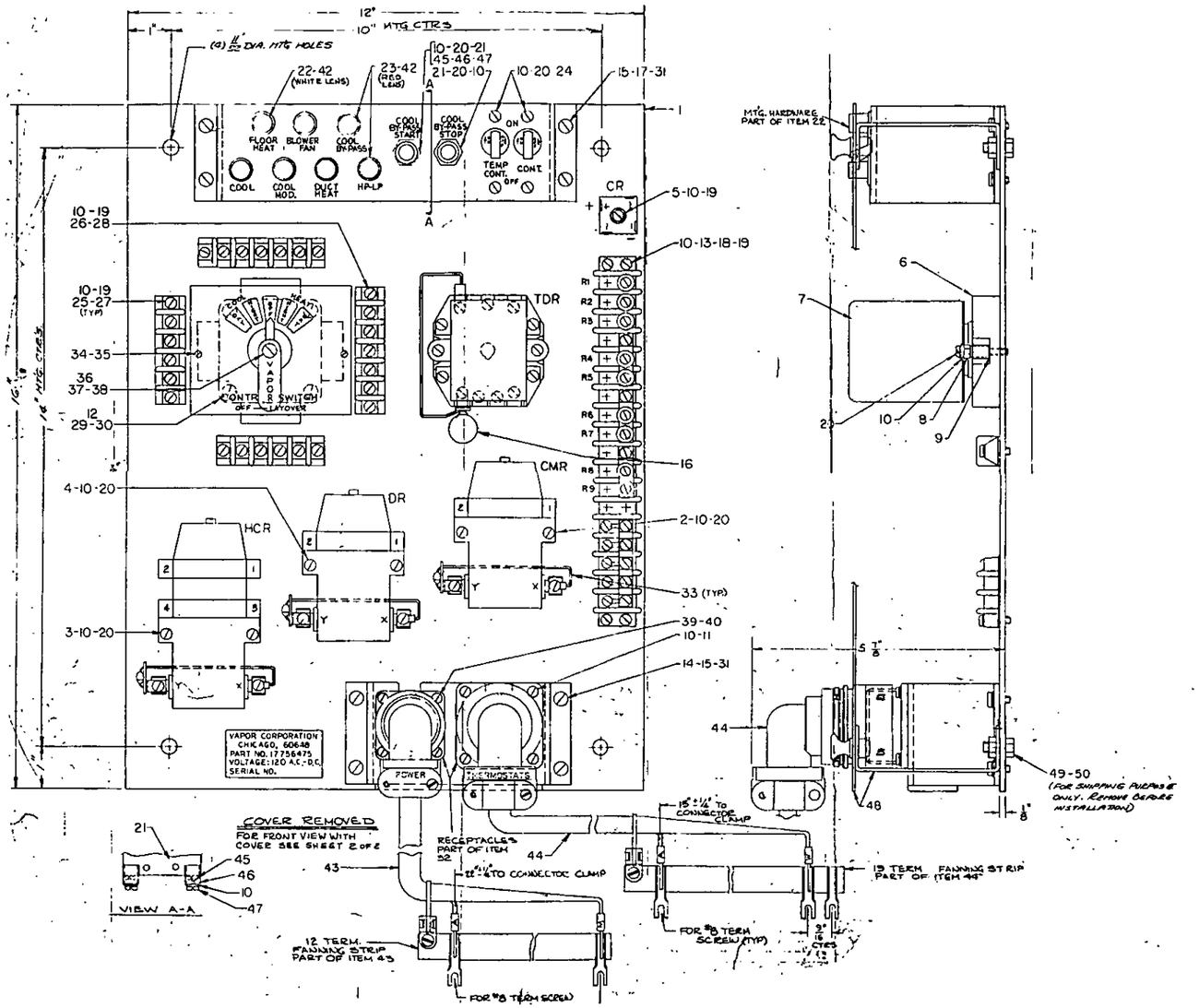

ITEM	PART NO.	DESCRIPTION	QTY.	REMARKS
1	17731065	PLATE - MOUNTING	1	
2	356H0175-17	RELAY - PILOT (CR2)	1	
3	350H0180-09	RELAY - PILOT (HCR)	1	
4	350H0176-09	RELAY - PILOT (DR)	1	
5	17511123	RECTIFIER - BRIDGE (CR)	1	
6	57510790	SOCKET - RELAY	1	
7	97411034-03	RELAY - TIME DELAY (HYDRID) (TDR)	1	
8	57410305-03	POST - HEX	2	
9	1106	LOCKWASHER (EXT.) (CODE 528)	2	SEE NOTE#1
10	6(5/16"OD X .028"TK)	FLATWASHER	33	SEE NOTE#1
11	#6-32 X 3/8" LG.	SCREW PAN HD. SEMS (EXT.)	4	SEE NOTE#1
12	1543288I-21	SWITCH - CONTROL	1	
13	17731068	TERMINAL STRIP ASSEMBLY	1	
14	17731066	BRACKET - MOUNTING (CONNECTORS)	1	
15	#8-32 X 3/8" LG.	SCREW PAN HD. SEMS (EXT.)	8	SEE NOTE#1
16	176Z0440-04	VARISTOR ASSEMBLY	1	
17	17721146	BRACKET - MOUNTING	1	
18	97212571	INSULATOR STRIP	1	
19	#6-32 X 5/8" LG.	SCREW PAN HD. SEMS (EXT.)	13	SEE NOTE#1
20	#6-32 X 5/16" LG.	SCREW PAN HD. SEMS (EXT.)	14	SEE NOTE#1
21	56310019	SWITCH-SNAP ACTION	2	
22	97711145	LIGHT ASSEM-IND. (WHITE)	5	
23	97711145-01	LIGHT ASSEM-IND. (RED)	2	
24	97520543-03	CIRCUIT BREAKER (5 AMP)	2	
25	96910012-02	STRIP - TERMINAL	2	
26	96910012-03	STRIP - TERMINAL	2	
27	97110025-07	STRIP - INSULATOR	2	
28	97110025-08	STRIP - INSULATOR	2	
29	#10-32 X 5/16"LG.	SCREW PAN HD. SEMS (EXT.)	4	SEE NOTE#1
30	#10(7/16"OD X .032"TK)	FLATWASHER	4	SEE NOTE#1
31	#8(5/8"OD X .032"TK)	FLATWASHER	8	SEE NOTE#1
32	17731070	HARNESS - WIRING	1	
33	97510398	RECTIFIER ASSEMBLY	1	
34	17731069	INDICATING PLATE(CONTROL SWITCH)	1	
35	#4 X 3/16" LG.	SCREW - SELF TAPPING (TYPE B)	2	SEE NOTE#1
36	15010465	KNOB - SWITCH (7100-D-1)	1	E-10559
37	#8-32 X 3/4" LG.	SCREW RD. HD.	1	SEE NOTE#1
38	#8	WASHER - SPLIT TYPE	1	SEE NOTE#1
39	4-40 X 3/8" LG.	SCREW PAN HD. SEMS (EXT.)	4	SEE NOTE#1
40	4(9/32OD X .025"TK)	FLATWASHER	4	SEE NOTE#1
41				
42	16991031-01	LAMP-NEON (NE-20)	1	
43	17731094	CONNECTOR & STRIP ASSEMBLY	1	
44	17731096	CONNECTOR & STRIP ASSEMBLY	1	
45	87411176	SPACER	2	
46	96328010-33	INSULATOR	2	
47	6-32 X 3/4" LG.	SCREW-PAN HD (TERMINAL)	2	
48	17731469	COVER & BRACKET ASSEM.	1	
49	1/4 -20 x 1/2" LG.	SCREW-HEX HD.	4	SEE NOTE#1
50	1/4 -20	NUT - HEX.	4	SEE NOTE#1

NOTE:
1. STEEL, CADMIUM PLATE COMMERCIAL FINISH.
2. TERMINAL LUG FASTENING MUST BE IN ACCORDANCE WITH DRAWINGS 67101001 THRU 67101005 WHICHEVER APPLIES.
3. PANEL, MATERIAL: 11 GA. STEEL
   FINISH: WHITE CROSS ENAMEL PAINT WITH BLACK SILK SCREEN LETTERING.
4. VAPOR TEST PROCEDURE 735-000029
5. SCHEM. WDG. DIAG 17704175

LIST OF MATERIAL

QTY	PART NUMBER	DESCRIPTION	MATERIAL	MFG/SPEC	P/L ITEM NO	ITEM

REFERENCE DRAWINGS: VAPOR P.17756475 SH. 1 OF 2

EQUIPMENT ENGINEERING — Amtrak

TITLE: TEMPERATURE CONTROL PANEL

2900-61
2980-97

DTY/CAR | USED ON

SIZE E | DWG NO. E-00474 | SHEET 1 of 2

MICRO FILM RATIO 30 X

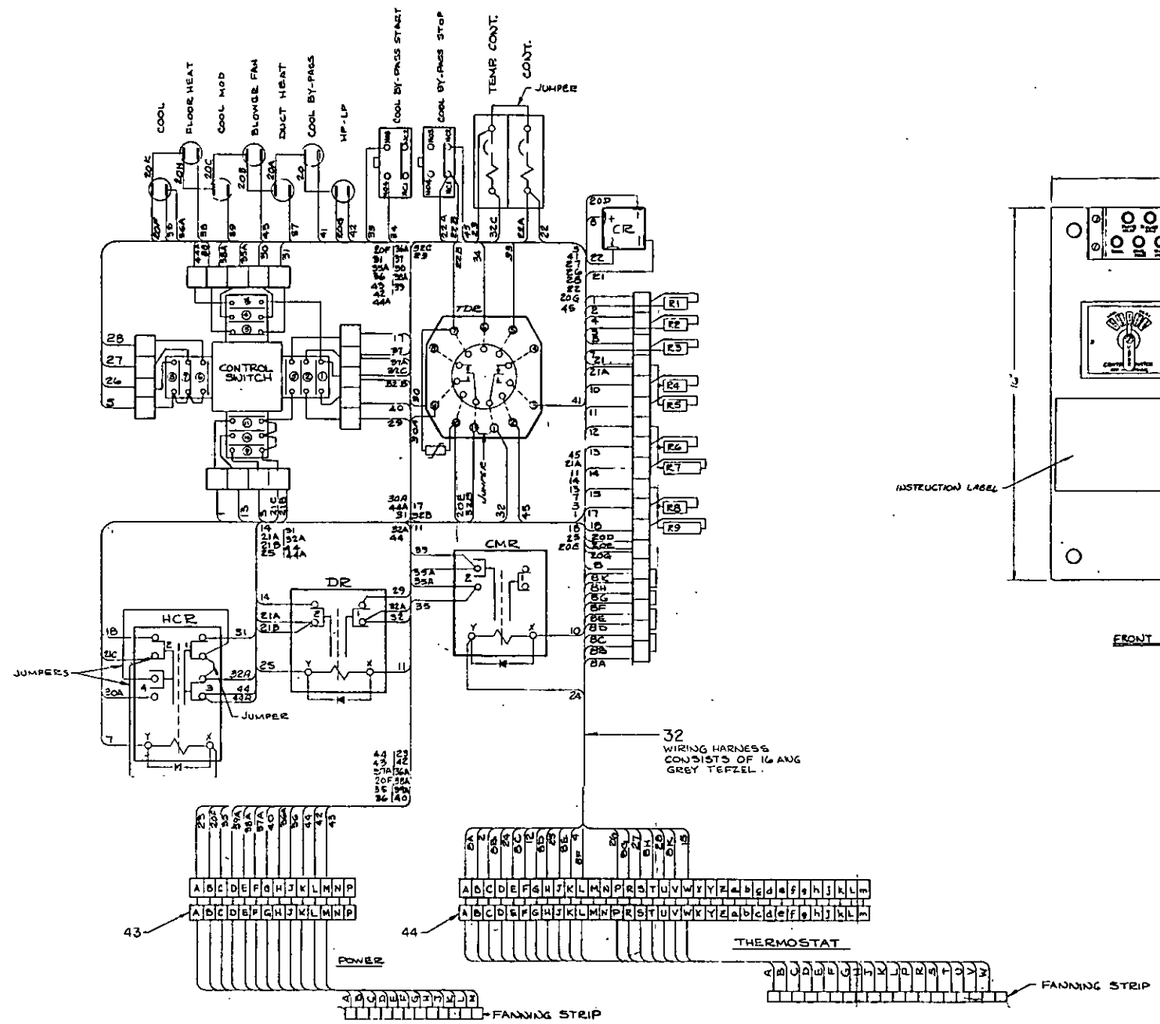

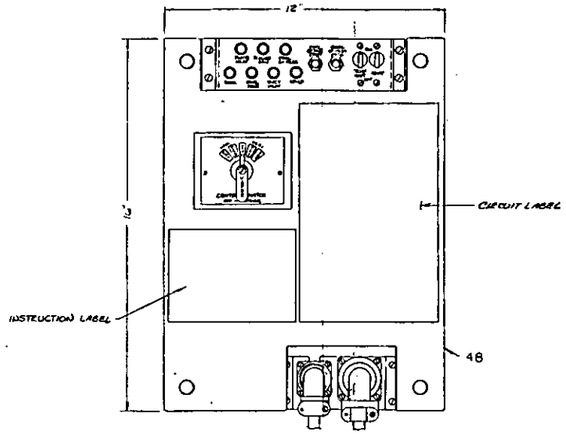

FRONT VIEW WITH COVER

QTY	PART NUMBER	DESCRIPTION	MATERIAL	MFG/SPEC	P/L ITEM NO	ITEM

LIST OF MATERIAL

REFERENCE DRAWINGS: VAPOR #17796475 SH. 2 OF 2

EQUIPMENT ENGINEERING
Amtrak

TITLE: TEMPERATURE CONTROL PANEL

2900-41
2900-97

QTY/CAR | USED ON

E-00-474

30 X

ELECTRICAL SCHEMATICS HERITAGE FLEET
SERIES 39902 - 39975

	DRAWING NO.	TITLES/DESCRIPTION
1	R-04-1011	Electric Locker Wiring Diagram Coach/Dorm 39902-39911
2	R-04-1012	Electric Locker Wiring Diagram Coach/Dorm 39912-39923 39925-39936
3	R-01-1013	Heat Wiring Schematic Coach/Dorm 39902-39936
4	R-01-1025	Temperature Control Schematic Coach/Dorm 39902-39938
5	R-04-1027	Wiring Diagram Switch Locker Coach/Dorm 39925-39936 39912-39923
6	R-04-1087	Wiring Diagram Switch Locker Coach/Dorm 39902-39911
7	R-01-1155	Heat Wiring Schematic Coach Dorm 39900, 39901, 39937, 39938 39902-39936
8	R-01-1158	Temperature Control Schematic Ogontz Coach Dorm 39900-39901
9	R-04-1165	Wiring Diagram Switch Locker Coach Dorm 39900-39901
10	R-01-1024	Temperature Control Schematic Coach 39940-39964
11	R-04-1026	Wiring Diagram Switch Locker Coach 39940-39964

	DRAWING NO.	TITLES/DESCRIPTION
12	R-04-1036	Electric Locker Wiring Diagram Coach 39940-39964
13	R-01-1038	Heat Wiring Schematic Coach 39940-39964
14	R-01-1157	Temperature Control Schematic Ogontz Coach 39940-39964
15	R-04-1046	Electric Locker Wiring Diagram Lounge 39970-39975
16	R-01-1065	Temperature Control Schematic Lounge 39970-39972, 39975
17	R-04-1067 (1)	Switch Locker Wiring Diagram Lounge 39970-39972, 39975
18	R-0401067 (2)	Switch Locker Wiring Diagram Lounge 39973, 39974
19	R-04-1121	Food Service Equipment Conduit and Wiring Lounge 39970-39975
20	R-01-1139	Temperature Control Panel Schematic Ogontz 39973-39974 39900-39901
21	R-01-1159	Temperature Control Schematic Ogontz Lounge 39973, 39974
22	R-01-1178	Temperature Control Panel Schematic Lounge 39970-39972, 39975

*For additional copies of this collection of schematics contact:
Supervisor Support Systems, Amtrak Technical Training Center
202 Garstang Street, Beech Grove, Indiana 46107
317/263-0465

For single diagram copies contact:
Operation and Maintenance Department
National Railroad Passenger Corporation
400 North Capitol St., N.W.
Washington, D.C. 20001
202/733-2694

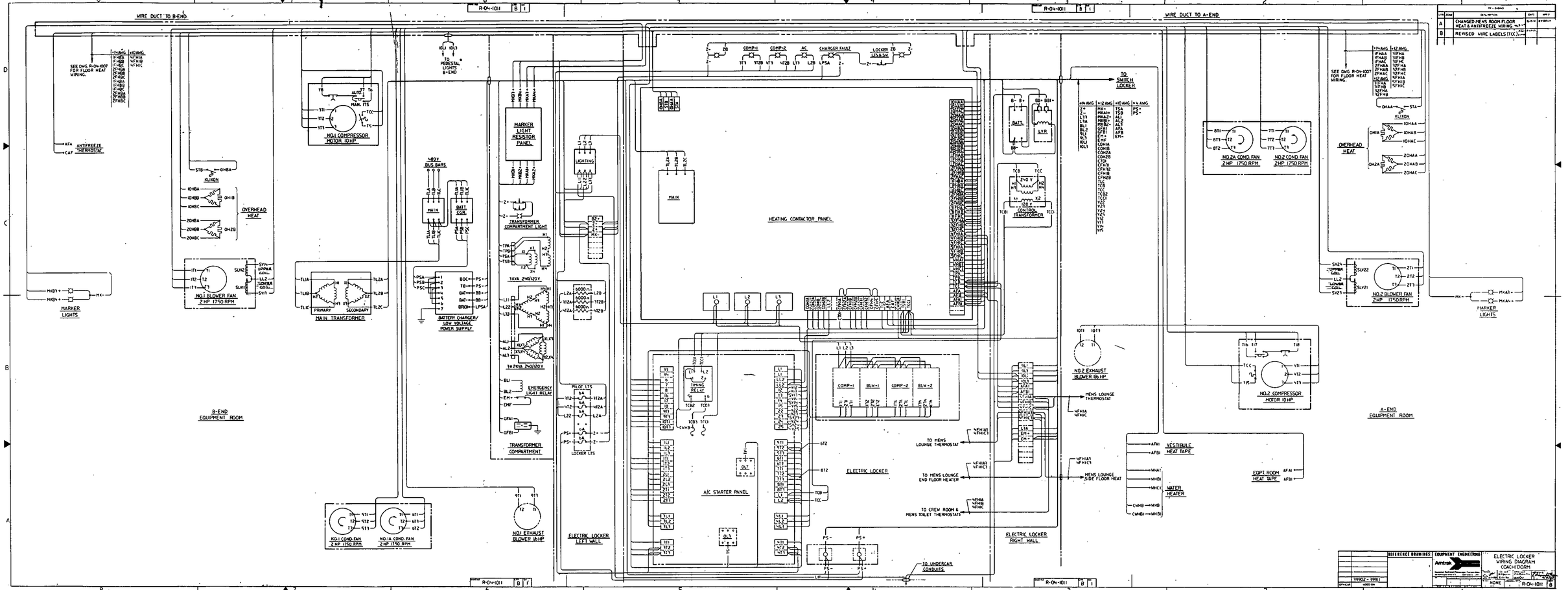
WIRE DUCT TO B-END
WIRE DUCT TO A-END
R-04-1011
SEE DWG. R-04-1007 FOR FLOOR HEAT WIRING.
ANTIFREEZE THERMOSTAT
KLIXON
OVERHEAD HEAT
NO.1 BLOWER FAN 2 HP 1750 RPM
MARKER LIGHTS
NO.1 COMPRESSOR MOTOR 10 HP
MAIN TRANSFORMER
PRIMARY
SECONDARY
480V BUS BARS
MAIN
BATT CGR
BATTERY CHARGER/ LOW VOLTAGE POWER SUPPLY
TO PEDESTAL LIGHTS B-END
MARKER LIGHT RESISTOR PANEL
TRANSFORMER COMPARTMENT LIGHT
LIGHTING
EMERGENCY LIGHT RELAY
TRANSFORMER COMPARTMENT
PILOT LTS
LOCKER LTS
ELECTRIC LOCKER LEFT WALL
NO.1 COND. FAN 2 HP 1750 RPM
NO.1A COND. FAN 2 HP 1750 RPM
NO.1 EXHAUST BLOWER 1/6 HP
B-END EQUIPMENT ROOM
COMP-1
COMP-2
AC
CHARGER FAULT
LOCKER LTS 8.5V
HEATING CONTACTOR PANEL
TIMING RELAY
A/C STARTER PANEL
ELECTRIC LOCKER
TO MENS LOUNGE THERMOSTAT
TO MENS LOUNGE END FLOOR HEATER
TO CREW ROOM & MENS TOILET THERMOSTATS
TO UNDERCAR CONDUITS
TO SWITCH LOCKER
BATT
LVR
CONTROL TRANSFORMER
NO.2 EXHAUST BLOWER 1/6 HP
MENS LOUNGE THERMOSTAT
MENS LOUNGE SIDE FLOOR HEAT
ELECTRIC LOCKER RIGHT WALL
VESTIBULE HEAT TAPE
WATER HEATER
EQPT. ROOM HEAT TAPE
NO.2A COND. FAN 2 HP 1750 RPM
NO.2 COND. FAN 2 HP 1750 RPM
NO.2 COMPRESSOR MOTOR 10 HP
NO.2 BLOWER FAN 2 HP 1750 RPM
A-END EQUIPMENT ROOM
CHANGED MENS ROOM FLOOR HEAT & ANTIFREEZE WIRING
REVISED WIRE LABELS (TCC)
REFERENCE DRAWINGS:
EQUIPMENT ENGINEERING
Amtrak
ELECTRIC LOCKER WIRING DIAGRAM COACH DORM
19902 - 19911
NONE
R-04-1011

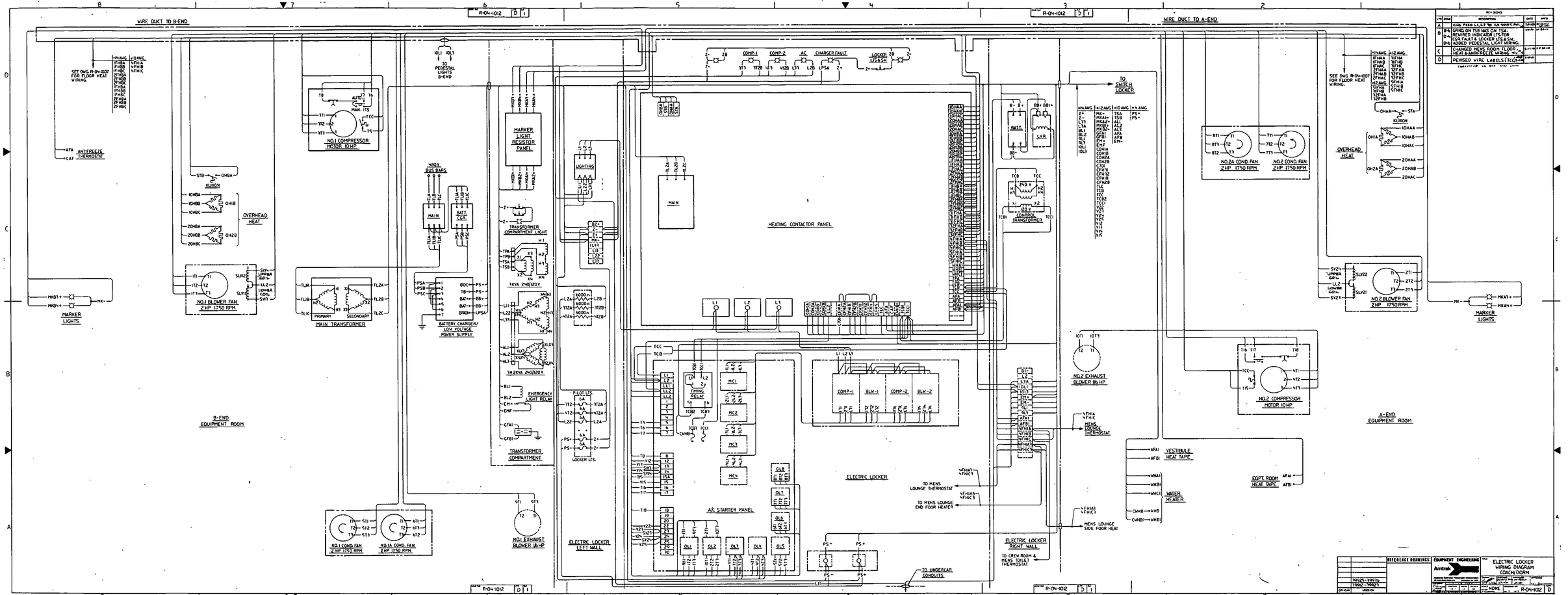
WIRE DUCT TO B-END
WIRE DUCT TO A-END
R-04-1012 5 F
R-04-1012 5 E
R-04-1012 5 D
R-04-1012 5 I
REVISIONS
LTR ZONE DESCRIPTION DATE APPD
A CHG FEED to LT'S TO BE 4/0 AWG THHN DWG. 10-JUL-96 JWS
B B-4 GRND ON TSB WAS ON TSA - REWIRED INDICATOR LTS FOR CGR FAULT & LOCKER LTS & SW. ADDED PEDESTAL LIGHT WIRING. 10-JUL-96 JWS
B-4 B-4 10-JUL-96 JWS
D-4 D-4 10-JUL-96 JWS
C CHANGED MENS ROOM FLOOR HEAT & ANTIFREEZE WIRING 15-MAY-97 JWS
D REVISED WIRE LABELS (TCO) 17-JUN-97 JWS
SEE DWG. R-04-1027 FOR FLOOR HEAT WIRING.
SEE DWG. R-04-1007 FOR FLOOR HEAT WIRING.
AFA ANTIFREEZE THERMOSTAT
CAF
MARKER LIGHTS
MK
MKB1+
MKB4+
MKA1+
MKA4+
B-END EQUIPMENT ROOM
A-END EQUIPMENT ROOM
NO.1 BLOWER FAN 2HP 1750 RPM
NO.2 BLOWER FAN 2HP 1750 RPM
OVERHEAD HEAT
KLIXON
MAIN TRANSFORMER
PRIMARY
SECONDARY
BATTERY CHARGER/ LOW VOLTAGE POWER SUPPLY
3KVA 240/120 V
1.6KVA 240/120 V
MARKER LIGHT RESISTOR PANEL
TRANSFORMER COMPARTMENT LIGHT
TRANSFORMER COMPARTMENT
LIGHTING
MAIN
BATT CGR
480V BUS BARS
HEATING CONTACTOR PANEL
ELECTRIC LOCKER
A/C STARTER PANEL
ELECTRIC LOCKER LEFT WALL
ELECTRIC LOCKER RIGHT WALL
LOCKER LTS.
PILOT LTS.
EMERGENCY LIGHT RELAY
TIMING RELAY
NO.1 COMPRESSOR MOTOR 10HP
NO.2 COMPRESSOR MOTOR 10HP
NO.1 COND. FAN 2HP 1750 RPM
NO.1A COND. FAN 2HP 1750 RPM
NO.2A COND. FAN 2HP 1750 RPM
NO.2 COND. FAN 2HP 1750 RPM
NO.1 EXHAUST BLOWER 1/6HP
NO.2 EXHAUST BLOWER 1/6 HP
CONTROL TRANSFORMER
480 V
120 V
BATT.
LVR
TO SWITCH LOCKER
TO PEDESTAL LIGHTS B-END
TO MENS LOUNGE THERMOSTAT
TO MENS LOUNGE END FOOR HEATER
MENS LOUNGE SIDE FOOR HEAT
MENS LOUNGE THERMOSTAT
TO CREW ROOM & MENS TOILET THERMOSTAT
TO UNDERCAR CONDUITS
VESTIBULE HEAT TAPE
WATER HEATER
EQPT. ROOM HEAT TAPE
REFERENCE DRAWINGS
99525-99536
99562-99623
EQUIPMENT ENGINEERING
Amtrak
ELECTRIC LOCKER WIRING DIAGRAM COACH/DORM
SCALE NONE
DRAWN ADM
CHECKED
APPROVED
DATE 10-JUL-96
ADM. PLANS
HOME
R-04-1012 D
2

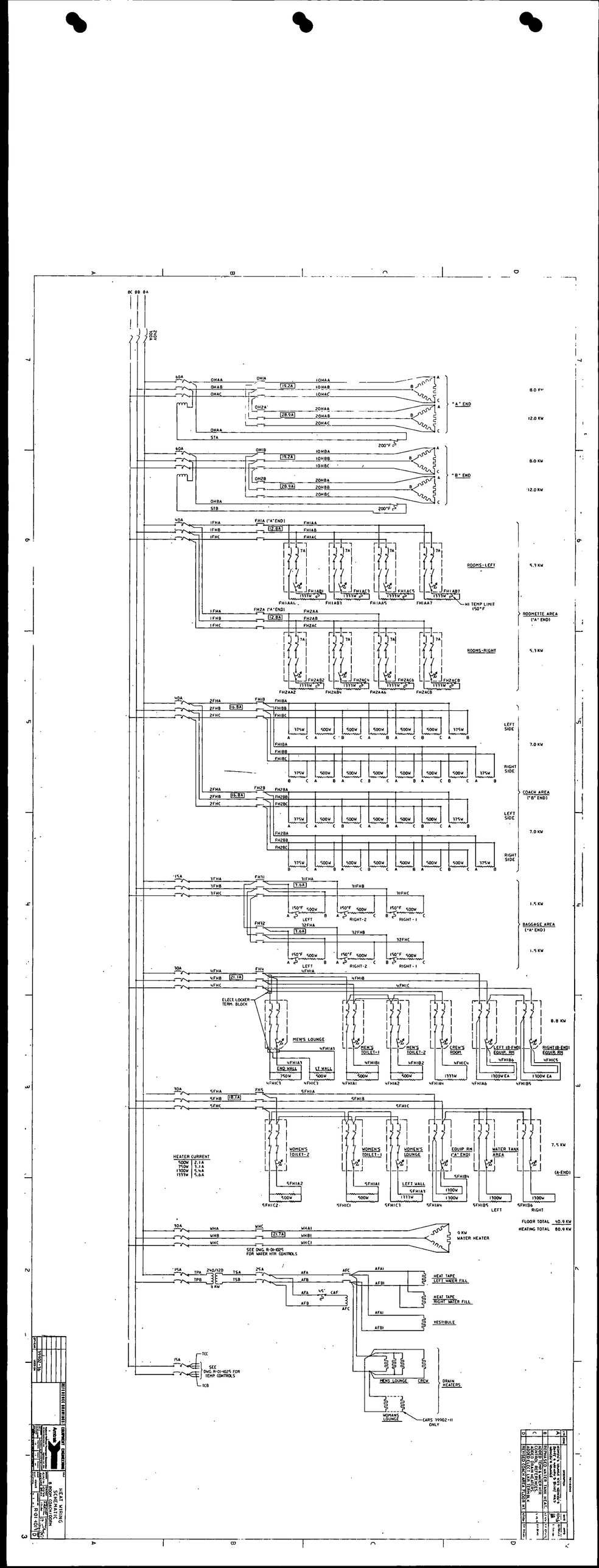
6K 8B 9A
480V 3PH 60HZ
60A
OH1A
OH1AA
OH1AB
OH1AC
10HAA
10HAB
10HAC
19.2A
OH2A
20HAA
20HAB
20HAC
28.9A
OH1AA
STA
200°F
"A" END
8.0 KW
12.0 KW
OH1B
OH1BA
OH1BB
OH1BC
10HBA
10HBB
10HBC
OH2B
20HBA
20HBB
20HBC
19.2A
28.9A
OH1BA
STB
200°F
"B" END
8.0 KW
12.0 KW
40A
1FHA
1FHB
1FHC
FH1A ("A" END)
12.8A
FH1AA
FH1AB
FH1AC
7A
FH1AA1
FH1AB1
FH1AC1
FH1AA5
FH1AB5
FH1AC5
FH1AA7
FH1AB7
1333W
HI TEMP LIMIT 150°F
ROOMS-LEFT
5.3 KW
FH2A ("A" END)
FH2AA
FH2AB
FH2AC
FH2AA2
FH2AB2
FH2AC2
FH2AA4
FH2AB4
FH2AC4
FH2AA6
FH2AB6
FH2AC6
FH2AA8
FH2AB8
FH2AC8
ROOMS-RIGHT
5.3 KW
ROOMETTE AREA ("A" END)
40A
2FHA
2FHB
2FHC
FH1B
FH1BA
FH1BB
FH1BC
16.8A
375W
500W
LEFT SIDE
RIGHT SIDE
7.0 KW
FH2B
FH2BA
FH2BB
FH2BC
COACH AREA ("B" END)
15A
3FHA
3FHB
3FHC
FH31
3.0A
31FHA
31FHB
31FHC
150°F
LEFT
RIGHT-2
RIGHT-1
1.5 KW
FH32
32FHA
32FHB
32FHC
1.6A
BAGGAGE AREA ("A" END)
1.5 KW
30A
4FHA
4FHB
4FHC
FH4
21.1A
4FHIA
4FHIB
4FHIC
ELECT. LOCKER TERM. BLOCK
MEN'S LOUNGE
4FHIA3
END WALL
750W
LT WALL
500W
4FHIC3
MEN'S TOILET-1
4FHIB1
4FHIA1
MEN'S TOILET-2
4FHIB2
4FHIA2
CREW'S ROOM
1333W
4FHIC4
4FHIA4
LEFT (B-END) EQUIP. RM
1300W EA
4FHIB6
4FHIA6
RIGHT (B-END) EQUIP. RM
4FHIC5
4FHIB5
1300W EA
8.8 KW
30A
5FHA
5FHB
5FHC
FH5
18.7A
5FHIA
5FHIB
5FHIC
HEATER CURRENT
500W 2.1A
750W 3.1A
1300W 5.4A
1333W 5.6A
WOMEN'S TOILET-2
5FHIA2
5FHIC2
WOMEN'S TOILET-1
5FHIA1
5FHIC1
WOMEN'S LOUNGE
LEFT WALL
1333W
5FHIA3
5FHIC3
EQUIP RM ("A" END)
5FHIB4
5FHIA4
1300W
WATER TANK AREA
5FHIB5
5FHIA5
LEFT
5FHIB6
5FHIA6
RIGHT
7.5 KW
(A-END)
FLOOR TOTAL 40.9 KW
HEATING TOTAL 80.9 KW
30A
WHA
WHB
WHC
21.7A
WHA1
WHB1
WHC1
9 KW WATER HEATER
SEE DWG. R-01-1025 FOR WATER HTR CONTROLS
15A
TPA
TPB
240/120
4 KW
25A
TSA
TSB
AFA
AFB
AFC
46°
CAF
AFA1
AFB1
HEAT TAPE LEFT WATER FILL
HEAT TAPE RIGHT WATER FILL
VESTIBULE
MENS LOUNGE
CREW
DRAIN HEATERS
WOMANS LOUNGE
CARS 19902-11 ONLY
15A
TCC
TCB
SEE DWG. R-01-1025 FOR TEMP CONTROLS
REFERENCE DRAWINGS
EQUIPMENT ARRANGEMENT
R-01-1001
R-01-1025
HEAT WIRING SCHEMATIC
R-01-1011
R-01-1012
R-01-1013
R-01-1014
R-01-1015
R-01-1016
R-01-1017
R-01-1018
R-01-1019
R-01-1020
R-01-1021
R-01-1022
R-01-1023
R-01-1024
R-01-1025
R-01-1026
R-01-1027
R-01-1028
R-01-1029
R-01-1030
R-01-1031
R-01-1032
R-01-1033
R-01-1034
R-01-1035
R-01-1036
R-01-1037
R-01-1038
R-01-1039
R-01-1040
R-01-1041
R-01-1042
R-01-1043
R-01-1044
R-01-1045
R-01-1046
R-01-1047
R-01-1048
R-01-1049
R-01-1050

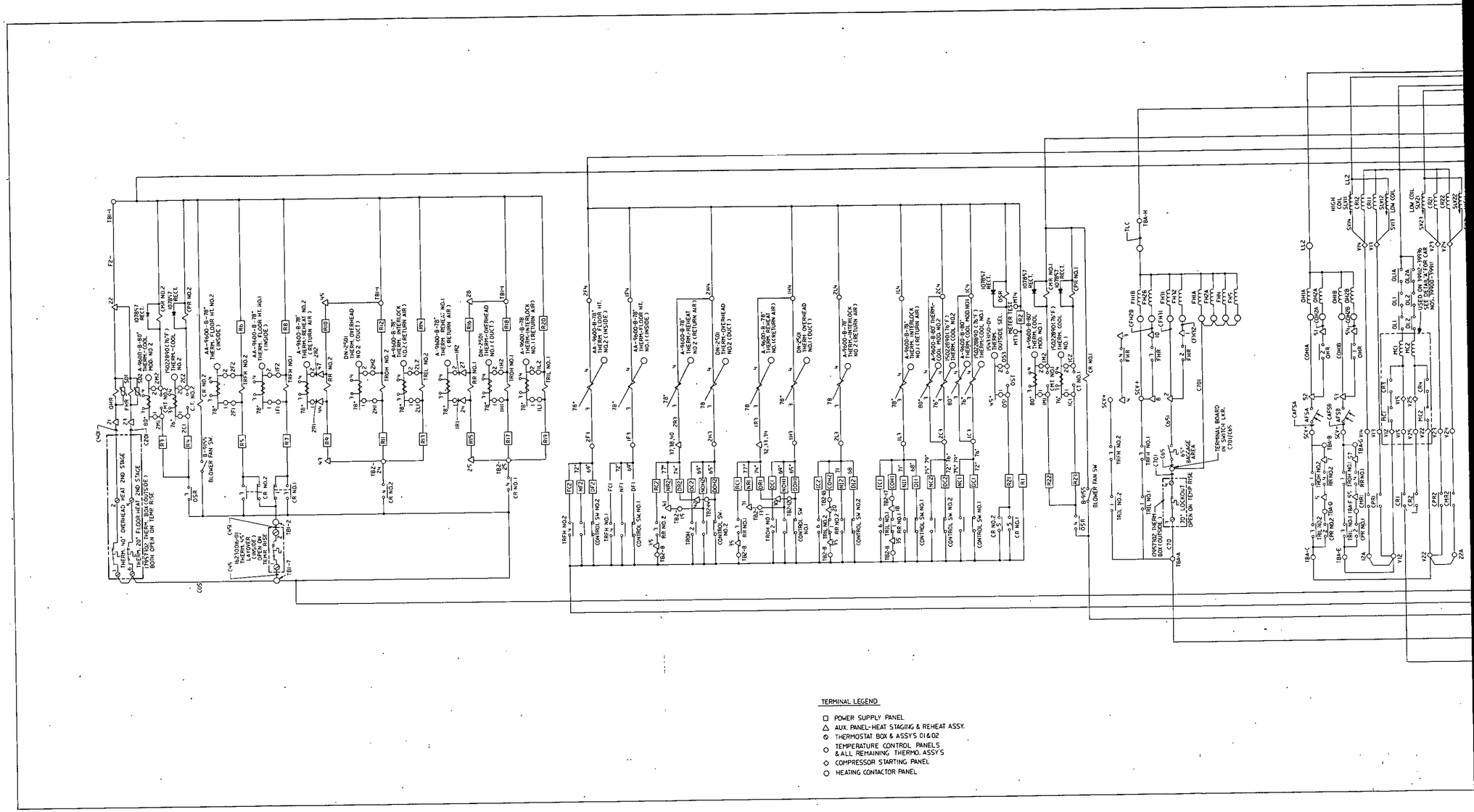
TERMINAL LEGEND
POWER SUPPLY PANEL
AUX. PANEL-HEAT STAGING & REHEAT ASSY.
THERMOSTAT BOX & ASSY'S 01&02
TEMPERATURE CONTROL PANELS & ALL REMAINING THERMO. ASSY'S
COMPRESSOR STARTING PANEL
HEATING CONTACTOR PANEL

TEMPERATURE CONTROL SCHEMATIC (CMCH,DOHM)
R-01-025
USED ON: MAS 39900-39936
ADDED TIME DELAY RELAY, ect
ADDED ADDITIONAL FEED TO A/C STARTER PANEL
ADDED WATER HTR CONTROL FEEDS
INTERCHANGED COIL AND THERM
CORRECTED CONTROL WIRE TERMINATIONS
DETAIL A
USED ON CAR NOS 39901-39936
TIME DELAY START UP RELAY RANDOM SET
A/C STARTER PANEL
TEMP CONTROL
2ND STG
WATER HEATER CONTROL
240 VAC
36 VAC
CMHB
CMHC
CMHBI
TCC
TCB
TDR
MC1
MC2

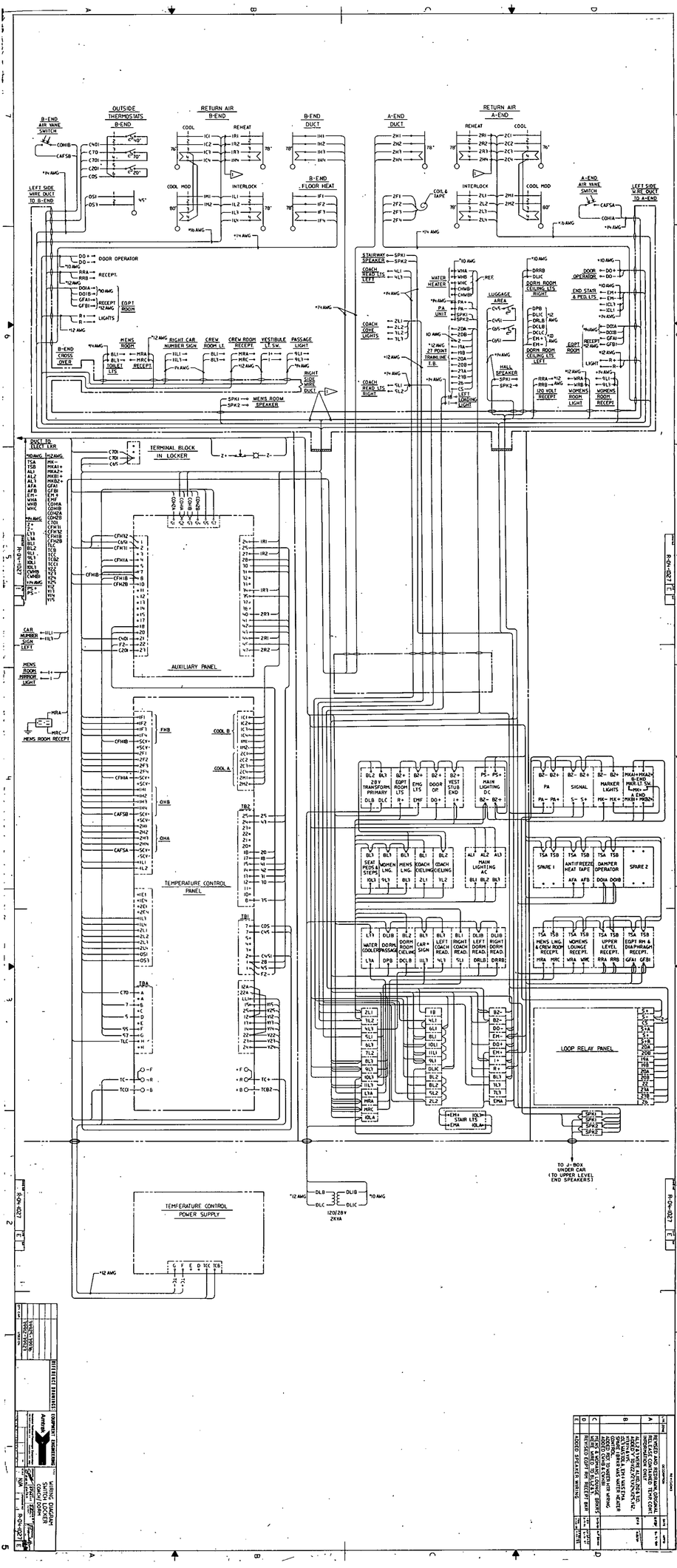
B-END AIR VANE SWITCH
OUTSIDE THERMOSTATS B-END
RETURN AIR B-END
B-END DUCT
A-END DUCT
RETURN AIR A-END
A-END AIR VANE SWITCH
LEFT SIDE WIRE DUCT TO B-END
LEFT SIDE WIRE DUCT TO A-END
COOL
REHEAT
INTERLOCK
COOL MOD
COOL & TAPE
B-END FLOOR HEAT
DOOR OPERATOR
RECEPT.
EQPT ROOM
LIGHTS
STAIRWAY SPEAKER LEFT
COACH READ LTS LEFT
COACH COVE LIGHTS
COACH READ LTS RIGHT
WATER HEATER
REF
PA UNIT
10 AWG
27 POINT TRAINLINE T.B.
LUGGAGE AREA
HALL SPEAKER
120 VOLT RECEPT
DORM ROOM CEILING LTS RIGHT
DORM ROOM CEILING LTS LEFT
END STAIR & PED. LTS
WOMENS ROOM LIGHT
WOMENS ROOM RECEPT
MENS ROOM
RIGHT CAR NUMBER SIGN
CREW ROOM LT.
CREW ROOM RECEPT.
VESTIBULE LT. SW.
PASSAGE LIGHT
TOILET LTS
SIDE WIRE DUCT
MENS ROOM SPEAKER
DUCT TO EQPT TRR
TERMINAL BLOCK IN LOCKER
AUXILIARY PANEL
TEMPERATURE CONTROL PANEL
TEMPERATURE CONTROL POWER SUPPLY
120/208 V 2KVA
LOOP RELAY PANEL
TO J-BOX UNDER CAR (TO UPPER LEVEL END SPEAKERS)
CAR NUMBER SIGN LEFT
MENS ROOM MIRROR LIGHT
MENS ROOM RECEPT
SEAT PEDS & STEPS
MENS LNG.
COACH CEILING
DOOR OP.
VEST STUB END
MAIN LIGHTING DC
PA
SIGNAL
MARKER LIGHTS
ANTI-FREEZE HEAT TAPE
DAMPER OPERATOR
SPARE 1
SPARE 2
MAIN LIGHTING AC
WATER COOLER
DORM ROOM CEILING
COACH SIGN
LEFT COACH READ.
RIGHT COACH READ.
LEFT DORM READ.
RIGHT DORM READ.
MENS LNG & CREW ROOM RECEPT.
WOMENS LOUNGE RECEPT.
UPPER LEVEL RECEPT.
EQPT RM & DIAPHRAGM RECEPT.
STAIR LTS
R-DH-027
R-DH-027 TC
R-DH-027 C
R-DH-027 E
R-DH-027 F
R-DH-027 G
R-DH-027 H
R-DH-027 J
R-DH-027 K
R-DH-027 L
R-DH-027 M
R-DH-027 N
R-DH-027 P
R-DH-027 R
R-DH-027 S
R-DH-027 T
R-DH-027 U
R-DH-027 V
R-DH-027 W
R-DH-027 X
R-DH-027 Y
R-DH-027 Z
R-DH-027 AA
R-DH-027 AB
R-DH-027 AC
R-DH-027 AD
R-DH-027 AE
R-DH-027 AF
R-DH-027 AG
R-DH-027 AH
R-DH-027 AJ
R-DH-027 AK
R-DH-027 AL
R-DH-027 AM
R-DH-027 AN
R-DH-027 AP
R-DH-027 AR
R-DH-027 AS
R-DH-027 AT
R-DH-027 AU
R-DH-027 AV
R-DH-027 AW
R-DH-027 AX
R-DH-027 AY
R-DH-027 AZ
R-DH-027 BA
R-DH-027 BB
R-DH-027 BC
R-DH-027 BD
R-DH-027 BE
R-DH-027 BF
R-DH-027 BG
R-DH-027 BH
R-DH-027 BJ
R-DH-027 BK
R-DH-027 BL
R-DH-027 BM
R-DH-027 BN
R-DH-027 BP
R-DH-027 BR
R-DH-027 BS
R-DH-027 BT
R-DH-027 BU
R-DH-027 BV
R-DH-027 BW
R-DH-027 BX
R-DH-027 BY
R-DH-027 BZ
R-DH-027 CA
R-DH-027 CB
R-DH-027 CC
R-DH-027 CD
R-DH-027 CE
R-DH-027 CF
R-DH-027 CG
R-DH-027 CH
R-DH-027 CJ
R-DH-027 CK
R-DH-027 CL
R-DH-027 CM
R-DH-027 CN
R-DH-027 CP
R-DH-027 CR
R-DH-027 CS
R-DH-027 CT
R-DH-027 CU
R-DH-027 CV
R-DH-027 CW
R-DH-027 CX
R-DH-027 CY
R-DH-027 CZ
R-DH-027 DA
R-DH-027 DB
R-DH-027 DC
R-DH-027 DD
R-DH-027 DE
R-DH-027 DF
R-DH-027 DG
R-DH-027 DH
R-DH-027 DJ
R-DH-027 DK
R-DH-027 DL
R-DH-027 DM
R-DH-027 DN
R-DH-027 DP
R-DH-027 DR
R-DH-027 DS
R-DH-027 DT
R-DH-027 DU
R-DH-027 DV
R-DH-027 DW
R-DH-027 DX
R-DH-027 DY
R-DH-027 DZ
R-DH-027 EA
R-DH-027 EB
R-DH-027 EC
R-DH-027 ED
R-DH-027 EE
R-DH-027 EF
R-DH-027 EG
R-DH-027 EH
R-DH-027 EJ
R-DH-027 EK
R-DH-027 EL
R-DH-027 EM
R-DH-027 EN
R-DH-027 EP
R-DH-027 ER
R-DH-027 ES
R-DH-027 ET
R-DH-027 EU
R-DH-027 EV
R-DH-027 EW
R-DH-027 EX
R-DH-027 EY
R-DH-027 EZ
R-DH-027 FA
R-DH-027 FB
R-DH-027 FC
R-DH-027 FD
R-DH-027 FE
R-DH-027 FF
R-DH-027 FG
R-DH-027 FH
R-DH-027 FJ
R-DH-027 FK
R-DH-027 FL
R-DH-027 FM
R-DH-027 FN
R-DH-027 FP
R-DH-027 FR
R-DH-027 FS
R-DH-027 FT
R-DH-027 FU
R-DH-027 FV
R-DH-027 FW
R-DH-027 FX
R-DH-027 FY
R-DH-027 FZ
R-DH-027 GA
R-DH-027 GB
R-DH-027 GC
R-DH-027 GD
R-DH-027 GE
R-DH-027 GF
R-DH-027 GG
R-DH-027 GH
R-DH-027 GJ
R-DH-027 GK
R-DH-027 GL
R-DH-027 GM
R-DH-027 GN
R-DH-027 GP
R-DH-027 GR
R-DH-027 GS
R-DH-027 GT
R-DH-027 GU
R-DH-027 GV
R-DH-027 GW
R-DH-027 GX
R-DH-027 GY
R-DH-027 GZ
R-DH-027 HA
R-DH-027 HB
R-DH-027 HC
R-DH-027 HD
R-DH-027 HE
R-DH-027 HF
R-DH-027 HG
R-DH-027 HH
R-DH-027 HJ
R-DH-027 HK
R-DH-027 HL
R-DH-027 HM
R-DH-027 HN
R-DH-027 HP
R-DH-027 HR
R-DH-027 HS
R-DH-027 HT
R-DH-027 HU
R-DH-027 HV
R-DH-027 HW
R-DH-027 HX
R-DH-027 HY
R-DH-027 HZ
R-DH-027 JA
R-DH-027 JB
R-DH-027 JC
R-DH-027 JD
R-DH-027 JE
R-DH-027 JF
R-DH-027 JG
R-DH-027 JH
R-DH-027 JJ
R-DH-027 JK
R-DH-027 JL
R-DH-027 JM
R-DH-027 JN
R-DH-027 JP
R-DH-027 JR
R-DH-027 JS
R-DH-027 JT
R-DH-027 JU
R-DH-027 JV
R-DH-027 JW
R-DH-027 JX
R-DH-027 JY
R-DH-027 JZ
R-DH-027 KA
R-DH-027 KB
R-DH-027 KC
R-DH-027 KD
R-DH-027 KE
R-DH-027 KF
R-DH-027 KG
R-DH-027 KH
R-DH-027 KJ
R-DH-027 KK
R-DH-027 KL
R-DH-027 KM
R-DH-027 KN
R-DH-027 KP
R-DH-027 KR
R-DH-027 KS
R-DH-027 KT
R-DH-027 KU
R-DH-027 KV
R-DH-027 KW
R-DH-027 KX
R-DH-027 KY
R-DH-027 KZ
R-DH-027 LA
R-DH-027 LB
R-DH-027 LC
R-DH-027 LD
R-DH-027 LE
R-DH-027 LF
R-DH-027 LG
R-DH-027 LH
R-DH-027 LJ
R-DH-027 LK
R-DH-027 LL
R-DH-027 LM
R-DH-027 LN
R-DH-027 LP
R-DH-027 LR
R-DH-027 LS
R-DH-027 LT
R-DH-027 LU
R-DH-027 LV
R-DH-027 LW
R-DH-027 LX
R-DH-027 LY
R-DH-027 LZ
R-DH-027 MA
R-DH-027 MB
R-DH-027 MC
R-DH-027 MD
R-DH-027 ME
R-DH-027 MF
R-DH-027 MG
R-DH-027 MH
R-DH-027 MJ
R-DH-027 MK
R-DH-027 ML
R-DH-027 MM
R-DH-027 MN
R-DH-027 MP
R-DH-027 MR
R-DH-027 MS
R-DH-027 MT
R-DH-027 MU
R-DH-027 MV
R-DH-027 MW
R-DH-027 MX
R-DH-027 MY
R-DH-027 MZ
R-DH-027 NA
R-DH-027 NB
R-DH-027 NC
R-DH-027 ND
R-DH-027 NE
R-DH-027 NF
R-DH-027 NG
R-DH-027 NH
R-DH-027 NJ
R-DH-027 NK
R-DH-027 NL
R-DH-027 NM
R-DH-027 NN
R-DH-027 NP
R-DH-027 NR
R-DH-027 NS
R-DH-027 NT
R-DH-027 NU
R-DH-027 NV
R-DH-027 NW
R-DH-027 NX
R-DH-027 NY
R-DH-027 NZ
R-DH-027 PA
R-DH-027 PB
R-DH-027 PC
R-DH-027 PD
R-DH-027 PE
R-DH-027 PF
R-DH-027 PG
R-DH-027 PH
R-DH-027 PJ
R-DH-027 PK
R-DH-027 PL
R-DH-027 PM
R-DH-027 PN
R-DH-027 PP
R-DH-027 PR
R-DH-027 PS
R-DH-027 PT
R-DH-027 PU
R-DH-027 PV
R-DH-027 PW
R-DH-027 PX
R-DH-027 PY
R-DH-027 PZ
R-DH-027 QA
R-DH-027 QB
R-DH-027 QC
R-DH-027 QD
R-DH-027 QE
R-DH-027 QF
R-DH-027 QG
R-DH-027 QH
R-DH-027 QJ
R-DH-027 QK
R-DH-027 QL
R-DH-027 QM
R-DH-027 QN
R-DH-027 QP
R-DH-027 QR
R-DH-027 QS
R-DH-027 QT
R-DH-027 QU
R-DH-027 QV
R-DH-027 QW
R-DH-027 QX
R-DH-027 QY
R-DH-027 QZ
R-DH-027 RA
R-DH-027 RB
R-DH-027 RC
R-DH-027 RD
R-DH-027 RE
R-DH-027 RF
R-DH-027 RG
R-DH-027 RH
R-DH-027 RJ
R-DH-027 RK
R-DH-027 RL
R-DH-027 RM
R-DH-027 RN
R-DH-027 RP
R-DH-027 RR
R-DH-027 RS
R-DH-027 RT
R-DH-027 RU
R-DH-027 RV
R-DH-027 RW
R-DH-027 RX
R-DH-027 RY
R-DH-027 RZ
R-DH-027 SA
R-DH-027 SB
R-DH-027 SC
R-DH-027 SD
R-DH-027 SE
R-DH-027 SF
R-DH-027 SG
R-DH-027 SH
R-DH-027 SJ
R-DH-027 SK
R-DH-027 SL
R-DH-027 SM
R-DH-027 SN
R-DH-027 SP
R-DH-027 SR
R-DH-027 SS
R-DH-027 ST
R-DH-027 SU
R-DH-027 SV
R-DH-027 SW
R-DH-027 SX
R-DH-027 SY
R-DH-027 SZ
R-DH-027 TA
R-DH-027 TB
R-DH-027 TC
R-DH-027 TD
R-DH-027 TE
R-DH-027 TF
R-DH-027 TG
R-DH-027 TH
R-DH-027 TJ
R-DH-027 TK
R-DH-027 TL
R-DH-027 TM
R-DH-027 TN
R-DH-027 TP
R-DH-027 TR
R-DH-027 TS
R-DH-027 TT
R-DH-027 TU
R-DH-027 TV
R-DH-027 TW
R-DH-027 TX
R-DH-027 TY
R-DH-027 TZ
R-DH-027 UA
R-DH-027 UB
R-DH-027 UC
R-DH-027 UD
R-DH-027 UE
R-DH-027 UF
R-DH-027 UG
R-DH-027 UH
R-DH-027 UJ
R-DH-027 UK
R-DH-027 UL
R-DH-027 UM
R-DH-027 UN
R-DH-027 UP
R-DH-027 UR
R-DH-027 US
R-DH-027 UT
R-DH-027 UU
R-DH-027 UV
R-DH-027 UW
R-DH-027 UX
R-DH-027 UY
R-DH-027 UZ
R-DH-027 VA
R-DH-027 VB
R-DH-027 VC
R-DH-027 VD
R-DH-027 VE
R-DH-027 VF
R-DH-027 VG
R-DH-027 VH
R-DH-027 VJ
R-DH-027 VK
R-DH-027 VL
R-DH-027 VM
R-DH-027 VN
R-DH-027 VP
R-DH-027 VR
R-DH-027 VS
R-DH-027 VT
R-DH-027 VU
R-DH-027 VV
R-DH-027 VW
R-DH-027 VX
R-DH-027 VY
R-DH-027 VZ
R-DH-027 WA
R-DH-027 WB
R-DH-027 WC
R-DH-027 WD
R-DH-027 WE
R-DH-027 WF
R-DH-027 WG
R-DH-027 WH
R-DH-027 WJ
R-DH-027 WK
R-DH-027 WL
R-DH-027 WM
R-DH-027 WN
R-DH-027 WP
R-DH-027 WR
R-DH-027 WS
R-DH-027 WT
R-DH-027 WU
R-DH-027 WV
R-DH-027 WW
R-DH-027 WX
R-DH-027 WY
R-DH-027 WZ
R-DH-027 XA
R-DH-027 XB
R-DH-027 XC
R-DH-027 XD
R-DH-027 XE
R-DH-027 XF
R-DH-027 XG
R-DH-027 XH
R-DH-027 XJ
R-DH-027 XK
R-DH-027 XL
R-DH-027 XM
R-DH-027 XN
R-DH-027 XP
R-DH-027 XR
R-DH-027 XS
R-DH-027 XT
R-DH-027 XU
R-DH-027 XV
R-DH-027 XW
R-DH-027 XX
R-DH-027 XY
R-DH-027 XZ
R-DH-027 YA
R-DH-027 YB
R-DH-027 YC
R-DH-027 YD
R-DH-027 YE
R-DH-027 YF
R-DH-027 YG
R-DH-027 YH
R-DH-027 YJ
R-DH-027 YK
R-DH-027 YL
R-DH-027 YM
R-DH-027 YN
R-DH-027 YP
R-DH-027 YR
R-DH-027 YS
R-DH-027 YT
R-DH-027 YU
R-DH-027 YV
R-DH-027 YW
R-DH-027 YX
R-DH-027 YY
R-DH-027 YZ
R-DH-027 ZA
R-DH-027 ZB
R-DH-027 ZC
R-DH-027 ZD
R-DH-027 ZE
R-DH-027 ZF
R-DH-027 ZG
R-DH-027 ZH
R-DH-027 ZJ
R-DH-027 ZK
R-DH-027 ZL
R-DH-027 ZM
R-DH-027 ZN
R-DH-027 ZP
R-DH-027 ZR
R-DH-027 ZS
R-DH-027 ZT
R-DH-027 ZU
R-DH-027 ZV
R-DH-027 ZW
R-DH-027 ZX
R-DH-027 ZY
R-DH-027 ZZ

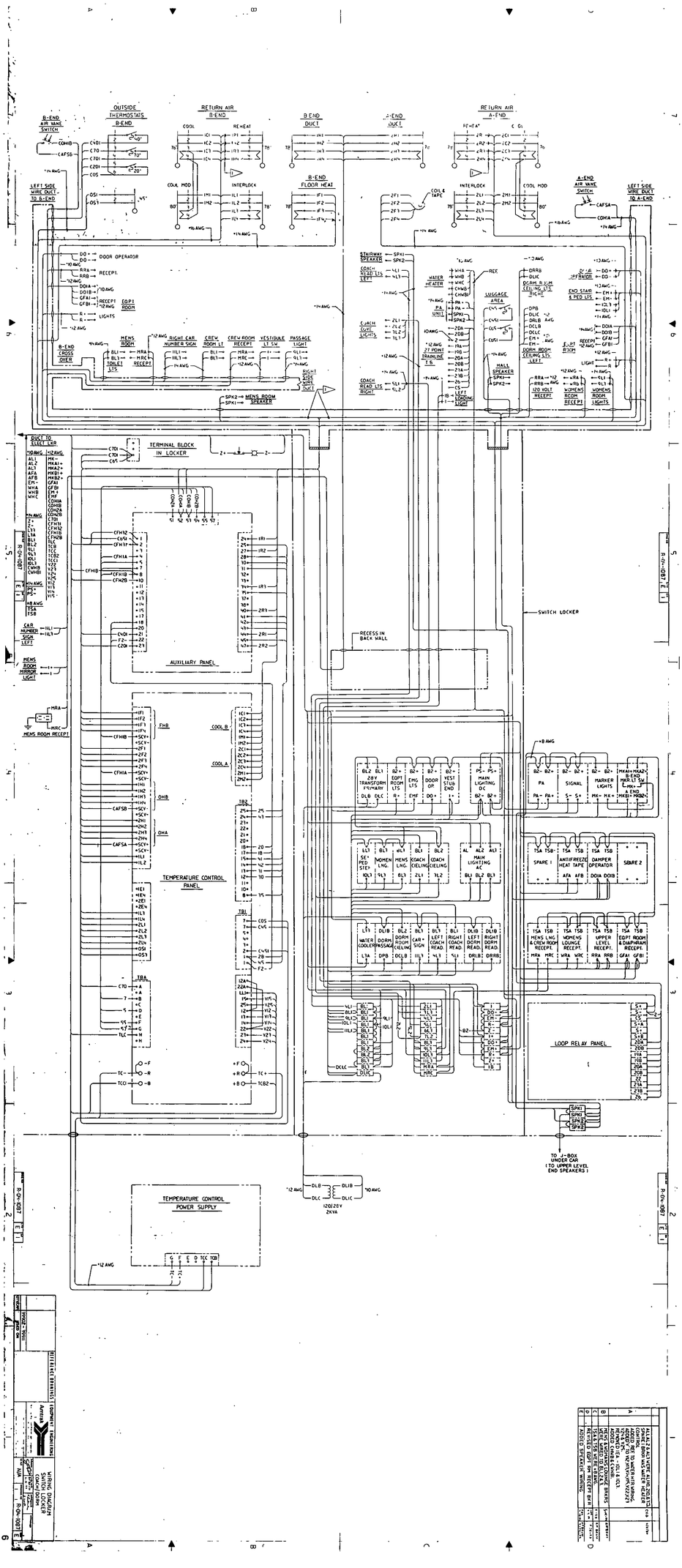
OUTSIDE THERMOSTATS
B-END
RETURN AIR B-END
B-END DUCT
A-END DUCT
RETURN AIR A-END
B-END AIR VANE SWITCH
LEFT SIDE WIRE DUCT TO B-END
B-END FLOOR HEAT
A-END AIR VANE SWITCH
LEFT SIDE WIRE DUCT TO A-END
DOOR OPERATOR
RECEPT
LIGHTS
MENS ROOM
RIGHT CAR NUMBER SIGN
CREW ROOM LT
CREW ROOM RECEPT
VESTIBULE LT SW
PASSAGE LIGHT
B-END CROSS OVER
RIGHT SIDE WIRE DUCT
STAIRWAY SPEAKER
COACH READ LTS LEFT
WATER HEATER
LUGGAGE AREA
PA UNIT
COACH CURT LIGHTS
20 POINT TRAINLINE
COACH READ LTS RIGHT
HALL SPEAKER
120 VOLT RECEPT
DOOR OPERATOR
END STAIR & PED LTS
E-OT ROOM
DORM ROOM CEILING LTS LEFT
WOMENS ROOM RECEPT
WOMENS ROOM LIGHTS
DUCT TO EXCEL LER
TERMINAL BLOCK IN LOCKER
AUXILIARY PANEL
SWITCH LOCKER
RECESS IN BACK WALL
MENS ROOM RECEPT
TEMPERATURE CONTROL PANEL
LOOP RELAY PANEL
TO J-BOX UNDER CAR (TO UPPER LEVEL END SPEAKERS)
TEMPERATURE CONTROL POWER SUPPLY
120/208V 2KVA
20V TRANSFORM PRIMARY
EOPT ROOM LTS
EMG LTS
DOOR OP
VEST STUB END
MAIN LIGHTING DC
PA
SIGNAL
MARKER LIGHTS
ANTIFREEZE HEAT TAPE
DAMPER OPERATOR
SPARE 1
SPARE 2
MAIN LIGHTING AC
WATER COOLER
WOMENS LNG
MENS LNG
COACH CEILING
LEFT COACH READ
RIGHT COACH READ
LEFT DORM READ
RIGHT DORM READ
DORM PASSAGE
DORM CEILING
CAR SIGN
MENS LNG & CREW ROOM RECEPT
WOMENS LOUNGE RECEPT
UPPER LEVEL RECEPT
EOPT ROOM & DIAPHRAM RECEPT
SPARE
AUTOMATIC TRANSFER SWITCH
ADDED CHAIN CONN
ADDED CHAIN CONN
ADDED CHAIN CONN

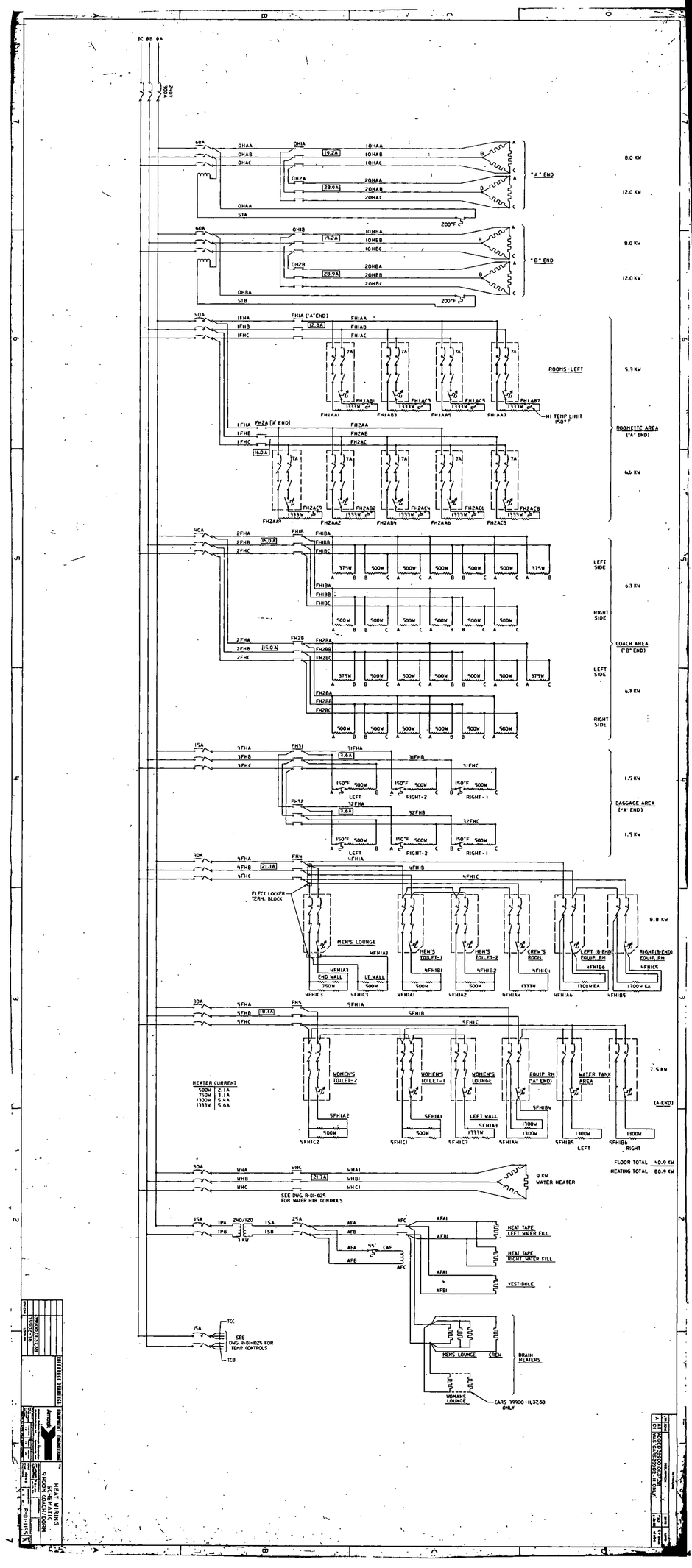

"A" END
"B" END
8.0 KW
12.0 KW
ROOMS-LEFT
5.3 KW
HI TEMP LIMIT 150°F
ROOMETTE AREA ("A" END)
6.6 KW
LEFT SIDE
RIGHT SIDE
6.3 KW
COACH AREA ("B" END)
BAGGAGE AREA ("A" END)
1.5 KW
ELECT. LOCKER TERM. BLOCK
MEN'S LOUNGE
MEN'S TOILET-1
MEN'S TOILET-2
CREW'S ROOM
LEFT (B-END) EQUIP. RM
RIGHT (B-END) EQUIP. RM
8.8 KW
WOMEN'S TOILET-2
WOMEN'S TOILET-1
WOMEN'S LOUNGE
EQUIP. RM ("A" END)
WATER TANK AREA
7.5 KW
(A-END)
HEATER CURRENT
500W 2.1A
750W 3.1A
1300W 5.4A
1333W 5.6A
FLOOR TOTAL 40.9 KW
HEATING TOTAL 80.9 KW
9 KW WATER HEATER
SEE DWG. R-01-1025 FOR WATER HTR CONTROLS
HEAT TAPE LEFT WATER FILL
HEAT TAPE RIGHT WATER FILL
VESTIBULE
DRAIN HEATERS
MEN'S LOUNGE
CREW
WOMAN'S LOUNGE
CARS 39900-11,37,38 ONLY
SEE DWG. R-01-1025 FOR TEMP CONTROLS
REFERENCE DRAWINGS
EQUIPMENT ENGINEERING
Amtrak
HEAT WIRING SCHEMATIC
9 ROOM COACH/DORM
R-01-1155

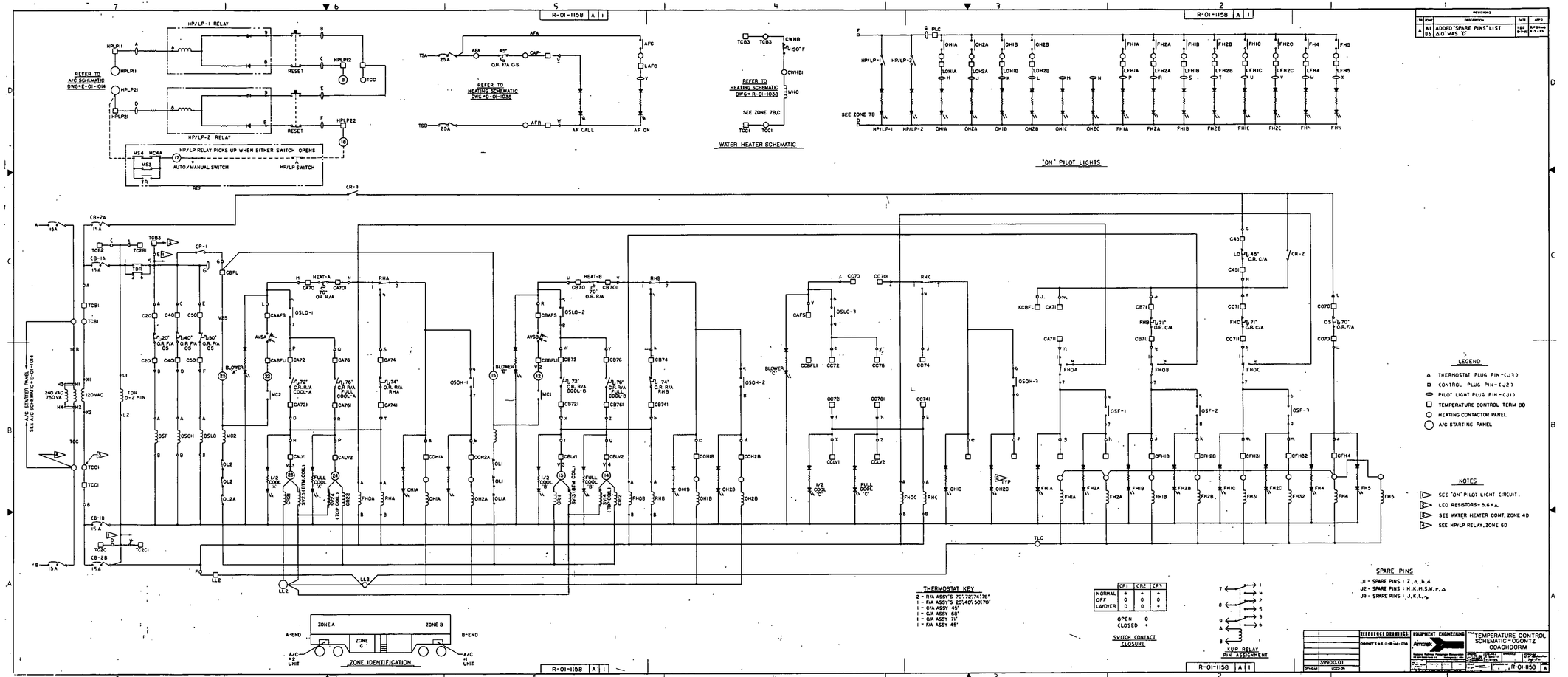

R-01-1158 A 1
HP/LP-1 RELAY
HP/LP-2 RELAY
REFER TO A/C SCHEMATIC DWG=E-01-1014
HP/LP RELAY PICKS UP WHEN EITHER SWITCH OPENS
AUTO/MANUAL SWITCH
HP/LP SWITCH
REFER TO HEATING SCHEMATIC DWG=D-01-1038
WATER HEATER SCHEMATIC
SEE ZONE 7B,C
"ON" PILOT LIGHTS
A/C STARTER PANEL SEE A/C SCHEMATIC=E-01-1014
ZONE IDENTIFICATION
ZONE A
ZONE B
ZONE C
A-END
B-END
LEGEND
THERMOSTAT PLUG PIN-(J3)
CONTROL PLUG PIN-(J2)
PILOT LIGHT PLUG PIN-(J1)
TEMPERATURE CONTROL TERM BD
HEATING CONTACTOR PANEL
A/C STARTING PANEL
NOTES
SEE "ON" PILOT LIGHT CIRCUIT.
LED RESISTORS-5.6KΩ
SEE WATER HEATER CONT. ZONE 4D
SEE HP/LP RELAY, ZONE 6D
THERMOSTAT KEY
2 - R/A ASSY'S 70°,72°,74°,76°
1 - F/A ASSY'S 20°,40°,50°,70°
1 - C/A ASSY 45°
1 - C/A ASSY 68°
1 - C/A ASSY 71°
1 - F/A ASSY 45°
SWITCH CONTACT CLOSURE
OPEN 0
CLOSED +
KUP RELAY PIN ASSIGNMENT
SPARE PINS
J1 - SPARE PINS : Z, a, b, d
J2 - SPARE PINS : H, K, M, S, W, r, Δ
J3 - SPARE PINS : J, K, L, η
REVISIONS
A1 ADDED "SPARE PINS" LIST
B6 Δ'0' WAS 'D'
REFERENCE DRAWINGS:
EQUIPMENT ENGINEERING
Amtrak
TEMPERATURE CONTROL SCHEMATIC - OGONTZ COACHDORM
R-01-1158 A

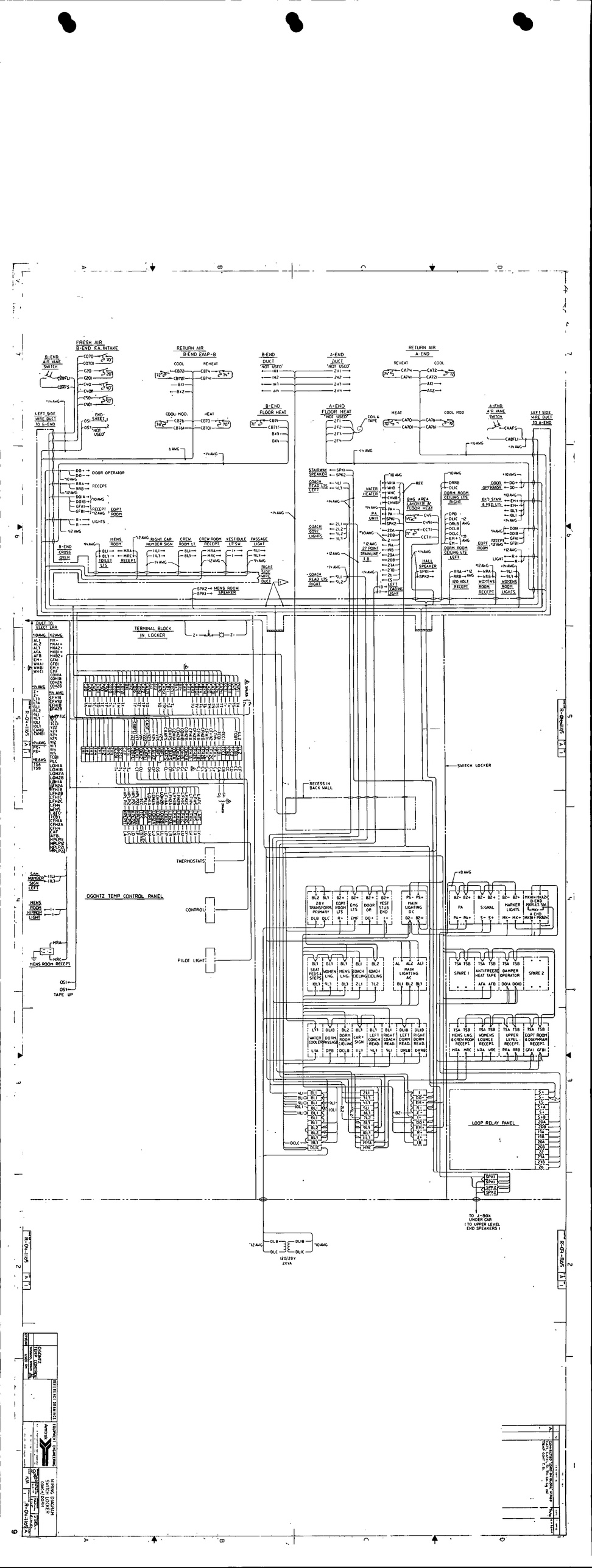
FRESH AIR
B-END FA INTAKE
RETURN AIR
B-END EVAP-B
B-END
DUCT
'NOT USED'
A-END
DUCT
'NOT USED'
RETURN AIR
A-END
B-END
AIR VANE
SWITCH
LEFT SIDE
WIRE DUCT
TO B-END
END
SHEET 1
NOT
USED
COOL
REHEAT
COOL MOD.
HEAT
B-END
FLOOR HEAT
A-END
FLOOR HEAT
'NOT USED'
COIL &
TAPE
A-END
A/R VANE
SWITCH
LEFT SIDE
WIRE DUCT
TO A-END
DOOR OPERATOR
RECEPT.
EQPT
ROOM
LIGHTS
B-END
CROSS
OVER
MENS
ROOM
RIGHT CAR
NUMBER SIGN
CREW
ROOM LTS
CREW ROOM
RECEPT.
VESTIBULE
LTS'G.
PASSAGE
LIGHT
RIGHT
SIDE
WIRE
DUCT
MENS ROOM
SPEAKER
STAIRWAY
SPEAKER
COACH
READ LTS
LEFT
COACH
COVE
LIGHTS
COACH
READ LTS
RIGHT
WATER
HEATER
PA
UNIT
27 POINT
TRAINLINE
J-B
LEFT
LOADING
LIGHT
BAG. AREA
LAVOYER &
FLOOR HEAT
HALL
SPEAKER
120 VOLT
RECEPT
DORM ROOM
CEILING LTS
RIGHT
DORM ROOM
CEILING LTS
LEFT
EQPT
ROOM
EXT. STAIR
& PED. LTS.
DOOR
OPERATOR
WOMENS
ROOM
LIGHTS
WOMENS
ROOM
RECEPT.
TERMINAL BLOCK
IN LOCKER
DUCT TO
ELECT. LKR
SWITCH LOCKER
RECESS IN
BACK WALL
THERMOSTATS
CONTROL
PILOT LIGHT
OGONTZ TEMP CONTROL PANEL
CAR
NUMBER
SIGN
LEFT
MENS
ROOM
MIRROR
LIGHT
MENS ROOM RECEPT
TAPE UP
LOOP RELAY PANEL
TO A-BOX
UNDER CAR
(TO UPPER LEVEL
END SPEAKERS)
120/208Y
2KVA
SEAT
PEDS &
STEPS
TRANSFORM.
PRIMARY
WOMENS
LNG.
MENS
LNG.
COACH
CEILING
DOOR
OR
CEILING
EMG
LTS
EQPT
ROOM
LTS
VEST
STUB
END
MAIN
LIGHTING
DC
MAIN
LIGHTING
AC
PA
SIGNAL
MARKER
LIGHTS
ANTIFREEZE
HEAT TAPE
DAMPER
OPERATOR
SPARE 1
SPARE 2
WATER
COOLER
DORM
PASSAGE
DORM
ROOM
CEILING
CAR
SIGN
LEFT
COACH
READ.
RIGHT
COACH
READ.
LEFT
DORM
READ.
RIGHT
DORM
READ.
MENS LNG.
& CREW ROOM
RECEPS.
WOMENS
LOUNGE
RECEPT.
UPPER
LEVEL
RECEPT.
EQPT ROOM
& DIAPHRAM
RECEPT.
REFERENCE DRAWINGS
EQUIPMENT ENGINEERING
WIRING DIAGRAM
SWITCH LOCKER
CONTRACT NO.
DRAWING NO.
SHEET NO.
REV.
DATE
BY
CHK'D
APP'D
DESCRIPTION
ISSUED FOR CONSTRUCTION
ISSUED FOR CONTRACT
ISSUED FOR BID
ISSUED FOR PRELIMINARY REVIEW
ISSUED FOR INFORMATION

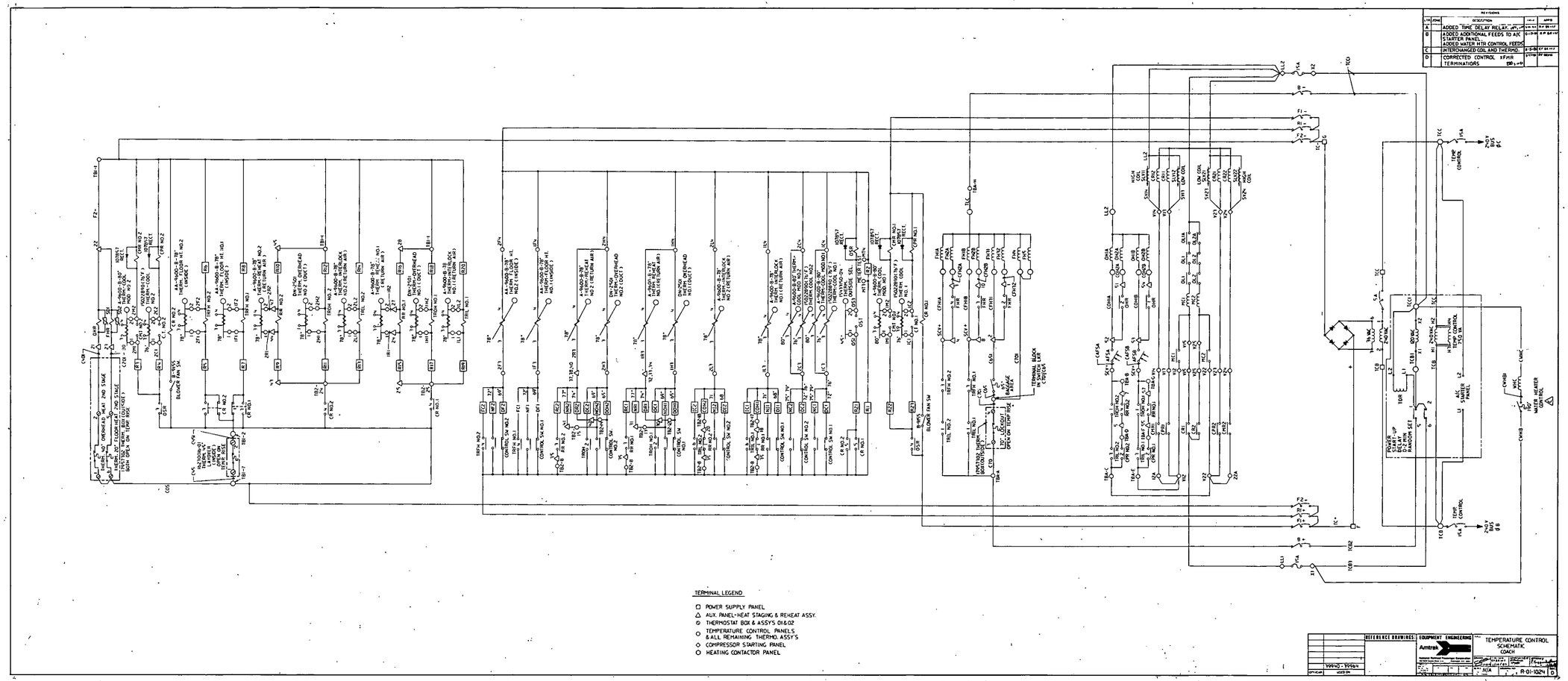
REVISIONS
A ADDED TIME DELAY RELAY
B ADDED ADDITIONAL FEEDS TO A/C STARTER PANEL. ADDED WATER HTR CONTROL FEEDS
C INTERCHANGED COIL AND THERMO.
D CORRECTED CONTROL XFMR TERMINATIONS
TERMINAL LEGEND
POWER SUPPLY PANEL
AUX. PANEL-HEAT STAGING & REHEAT ASSY.
THERMOSTAT BOX & ASSY'S 01&02
TEMPERATURE CONTROL PANELS & ALL REMAINING THERMO. ASSY'S
COMPRESSOR STARTING PANEL
HEATING CONTACTOR PANEL
REFERENCE DRAWINGS:
EQUIPMENT ENGINEERING
Amtrak
TEMPERATURE CONTROL SCHEMATIC COACH
R-01-1024
10

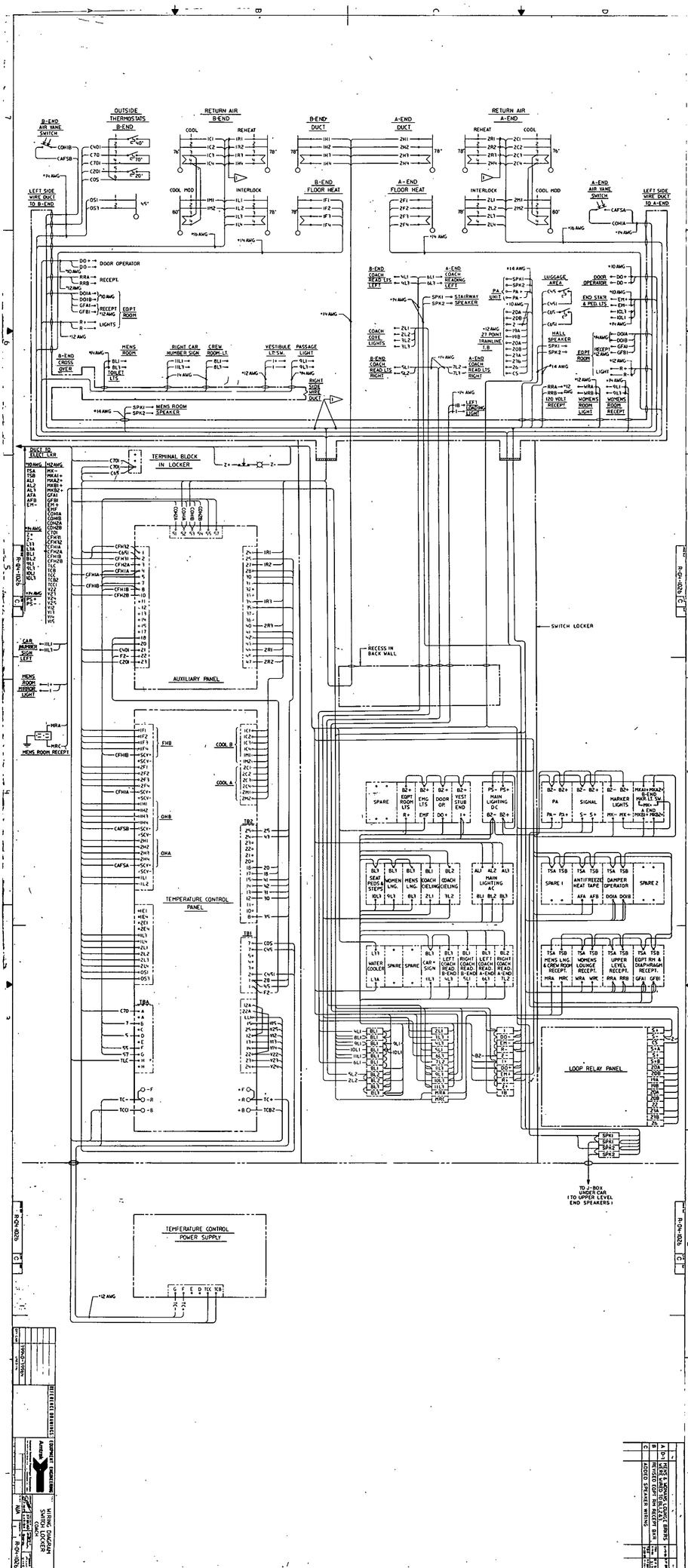
B-END AIR VANE SWITCH
OUTSIDE THERMOSTATS B-END
RETURN AIR B-END
B-END DUCT
A-END DUCT
RETURN AIR A-END
A-END AIR VANE SWITCH
LEFT SIDE WIRE DUCT TO B-END
LEFT SIDE WIRE DUCT TO A-END
COOL
REHEAT
COOL MOD
INTERLOCK
B-END FLOOR HEAT
A-END FLOOR HEAT
DOOR OPERATOR
RECEPT.
LIGHTS
EQPT ROOM
TOILET LTS
MENS ROOM
RIGHT CAR NUMBER SIGN
CREW ROOM LT
VESTIBULE LT SW.
PASSAGE LIGHT
RIGHT SIDE WIRE DUCT
B-END CROSS OVER
B-END COACH REAR LTS LEFT
A-END COACH READING LEFT
STAIRWAY SPEAKER
MENS ROOM SPEAKER
B-END COACH READ LTS RIGHT
A-END COACH READING RIGHT
PA UNIT
LUGGAGE AREA
END STAIR & PED LTS
HALL SPEAKER
27 POINT TRAINLINE T.B
WOMENS ROOM LIGHT
WOMENS ROOM RECEPT.
120 VOLT RECEPT.
LEFT COACHING LIGHT
DUCT TO ELECT. LKR
TERMINAL BLOCK IN LOCKER
AUXILIARY PANEL
CAR NUMBER SIGN LEFT
MENS ROOM MIRROR LIGHT
MENS ROOM RECEPT.
TEMPERATURE CONTROL PANEL
TEMPERATURE CONTROL POWER SUPPLY
SWITCH LOCKER
RECESS IN BACK WALL
LOOP RELAY PANEL
TO J-BOX UNDER CAR (TO UPPER LEVEL END SPEAKERS)
SPARE
EQPT ROOM LTS
EMG LTS
DOOR OP
YEST STUB END
MAIN LIGHTING DC
PA
SIGNAL
HARPER LIGHTS
SEAT PED. STEPS
MENS LNG.
WOMENS LNG.
COACH CEILING
MAIN LIGHTING AC
SPARE 1
ANTIFREEZE HEAT TAPE
DAMPER OPERATOR
SPARE 2
WATER COOLER
CAR SIGN
LEFT COACH READ
RIGHT COACH READ
MENS LNG. & CREW ROOM RECEPT.
WOMENS LOUNGE RECEPT.
UPPER LEVEL RECEPT.
EQPT RM & DIAPHRAGM RECEPT.

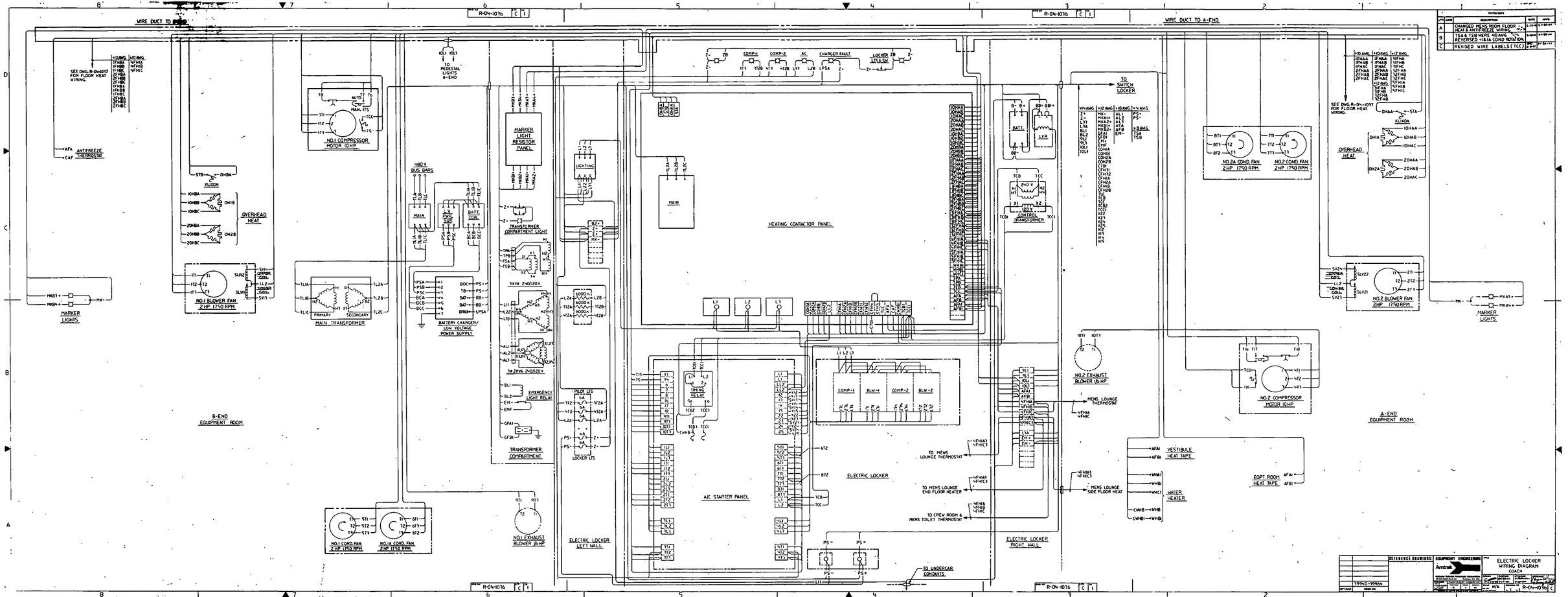
WIRE DUCT TO B-END
WIRE DUCT TO A-END
SEE DWG. R-04-1037 FOR FLOOR HEAT WIRING.
ANTIFREEZE THERMOSTAT
MARKER LIGHTS
KLIXON
OVERHEAD HEAT
NO.1 BLOWER FAN 2 HP 1750 RPM
NO.1 COMPRESSOR MOTOR 10 HP
MAIN TRANSFORMER
PRIMARY
SECONDARY
800 V BUS BARS
MAIN
BATT. COIL
BATTERY CHARGER/ LOW VOLTAGE POWER SUPPLY
MARKER LIGHT RESISTOR PANEL
LIGHTING
TRANSFORMER COMPARTMENT LIGHT
3 KVA 240/120 V
1 ø 2 KVA 240/120 V
TRANSFORMER COMPARTMENT
EMERGENCY LIGHT RELAY
PILOT LTS
LOCKER LTS
ELECTRIC LOCKER LEFT WALL
NO.1 EXHAUST BLOWER 10 HP
NO.1 COND. FAN 2 HP 1750 RPM
NO.1A COND. FAN 2 HP 1750 RPM
IDLI IDL1
TO PEDESTAL LIGHTS B-END
B-END EQUIPMENT ROOM
HEATING CONTACTOR PANEL
MAIN
AIC STARTER PANEL
TIMING RELAY
ELECTRIC LOCKER
TO MEMS LOUNGE THERMOSTAT
TO MEMS LOUNGE END FLOOR HEATER
TO CREW ROOM & MEMS TOILET THERMOSTAT
TO UNDERCAR CONDUITS
ELECTRIC LOCKER RIGHT WALL
BATT.
LVR
CONTROL TRANSFORMER
TO SWITCH LOCKER
NO.2A COND. FAN 2 HP 1750 RPM
NO.2 COND. FAN 2 HP 1750 RPM
NO.2 BLOWER FAN 2 HP 1750 RPM
NO.2 EXHAUST BLOWER 10 HP
NO.2 COMPRESSOR MOTOR 10 HP
MEMS LOUNGE THERMOSTAT
MEMS LOUNGE SIDE FLOOR HEAT
VESTIBULE HEAT TAPE
WATER HEATER
EQPT. ROOM HEAT TAPE
A-END EQUIPMENT ROOM
MARKER LIGHTS
REVISIONS
A CHANGED MEMS ROOM FLOOR HEAT & ANTIFREEZE WIRING
B TS4 & TS8 WERE 10 AWG REVERSED 418A COND ROTATION
C REVISED WIRE LABELS (TCC)
REFERENCE DRAWINGS
EQUIPMENT ENGINEERING
Amtrak
ELECTRIC LOCKER WIRING DIAGRAM COACH
R-04-1036 C
12

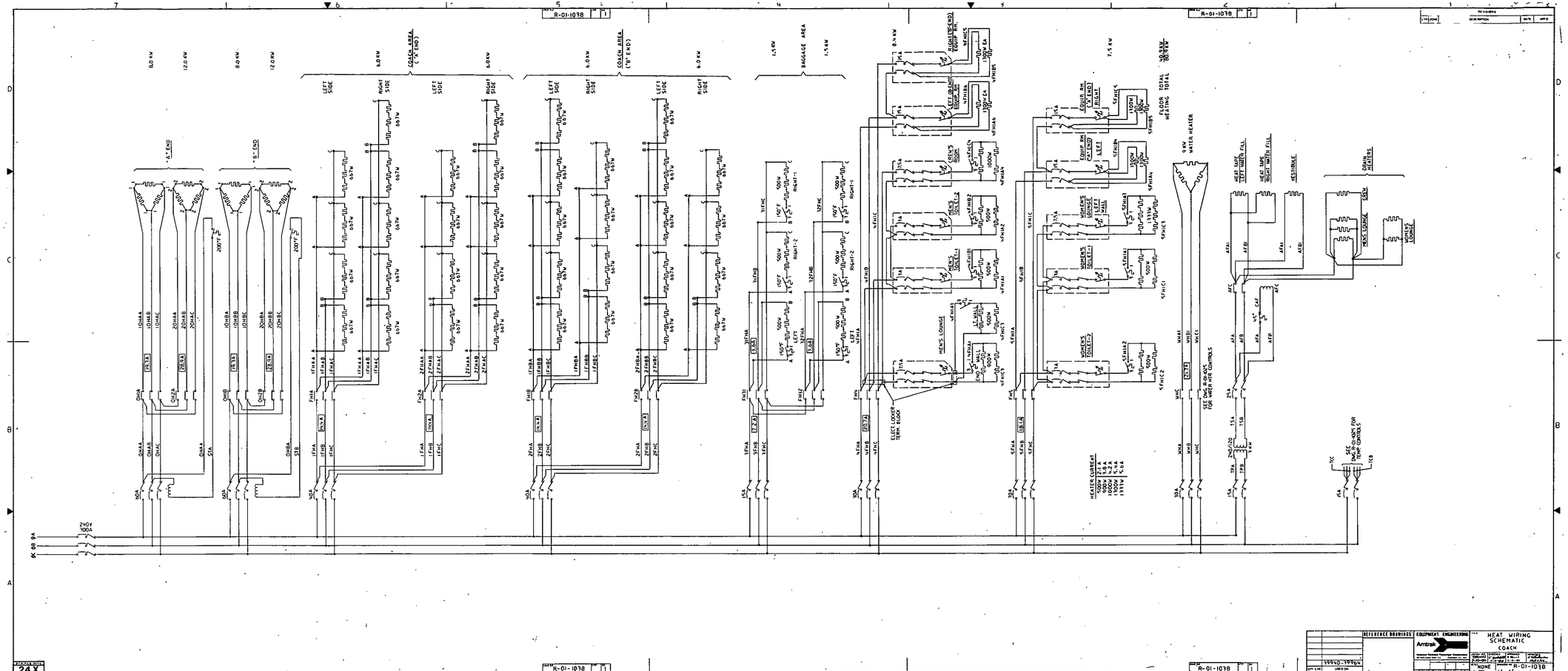

R-01-1038
COACH AREA ("A" END)
COACH AREA ("B" END)
BAGGAGE AREA
LEFT SIDE
RIGHT SIDE
"A" END
"B" END
8.0 KW
12.0 KW
6.0 KW
1.5 KW
8.4 KW
7.5 KW
FLOOR TOTAL 40.9 KW
HEATING TOTAL 80.9 KW
9 KW WATER HEATER
HEAT TAPE LEFT WATER FILL
HEAT TAPE RIGHT WATER FILL
VESTIBULE
DRAIN HEATERS
MEN'S LOUNGE
WOMEN'S LOUNGE
ELECT LOCKER TERM. BLOCK
SEE DWG. R-01-1025 FOR WATER HTR CONTROLS
SEE DWG. R-01-1025 FOR TEMP CONTROLS
HEATER CURRENT
240V 100A
24X
REFERENCE DRAWINGS
EQUIPMENT ENGINEERING
Amtrak
HEAT WIRING SCHEMATIC
COACH
NONE
R-01-1038

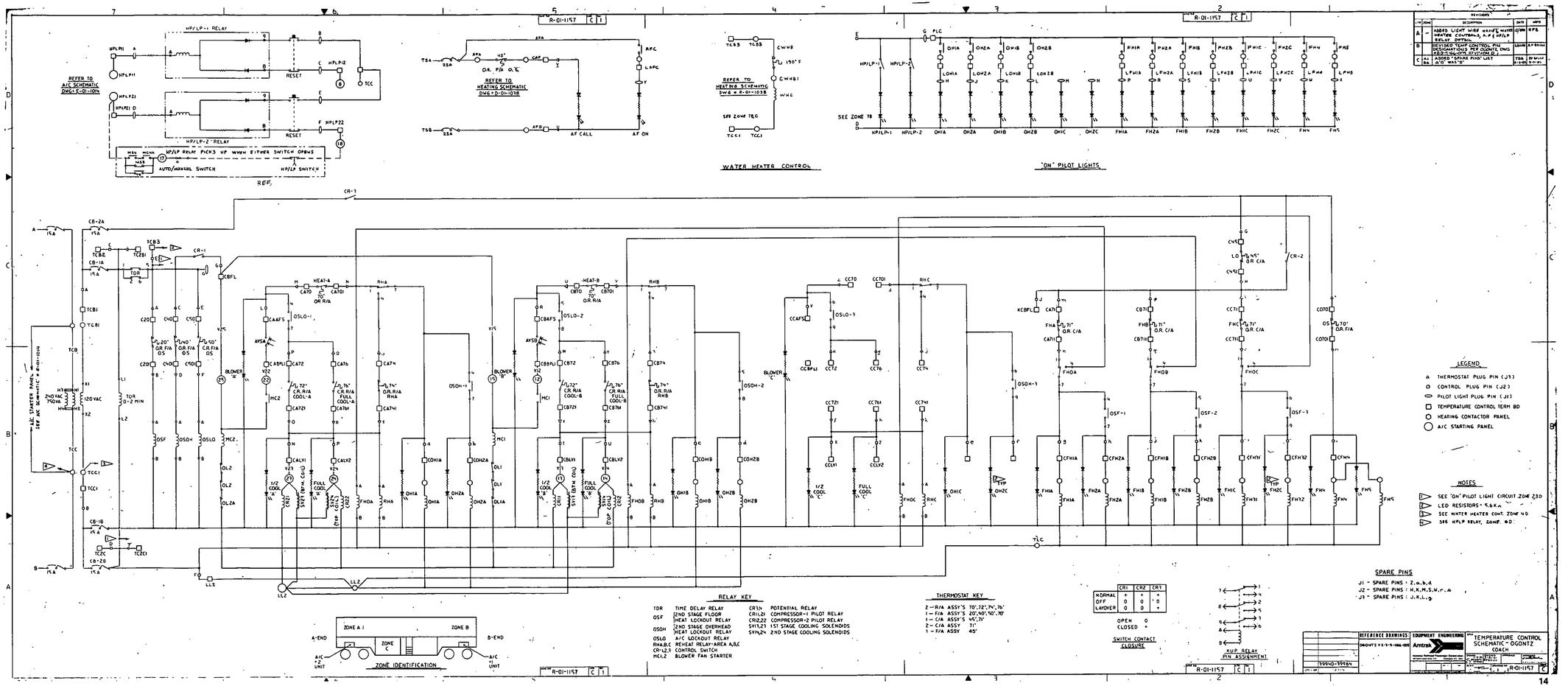
REFER TO A/C SCHEMATIC DWG = E-01-1014
HP/LP-1 RELAY
HP/LP-2 RELAY
HPLP11
HPLP12
HPLP21
HPLP22
RESET
TCC
HP/LP RELAY PICKS UP WHEN EITHER SWITCH OPENS
AUTO/MANUAL SWITCH
HP/LP SWITCH
REF.
R-01-1157
REFER TO HEATING SCHEMATIC DWG = D-01-1038
TSA
TSB
25A
APA
APB
45°
OR. P/A 0.5
CAP
AFC
LAPC
AF CALL
AF ON
TCB3
TCB9
CWWB
190° F
CWWB1
WWC
REFER TO HEATING SCHEMATIC SWG = R-01-1038
SEE ZONE 7&C
TCC1
TCC9
WATER HEATER CONTROL
SEE ZONE 7B
HP/LP-1
HP/LP-2
OH1A
OH2A
OH1B
OH2B
OH1C
OH2C
FH1A
FH2A
FH1B
FH2B
FH1C
FH2C
FH4
FH5
"ON" PILOT LIGHTS
CB-2A
CB-1A
CB-1B
CB-2B
TCB1
TCB8
TCB
TCC
TCC1
TCC1
TCB2
TCB2B1
TCB2C
TCB2C1
CR-1
CBFL
TDR
0-2 MIN
H1
H2
H3
240 VAC
750 W
120 VAC
X1
X2
L1
L2
HEAT-A
HEAT-B
RHA
RHB
CA70
CA701
CB70
CB701
70° O.R. R/A
CA7A
CA7A1
CB7A
CB7A1
CA7B
CA7B1
CB7B
CB7B1
CA7H
CA7H1
CB7H
CB7H1
CCH
CCH1
CCF
CCF1
CCG
CCG1
CCJ
CCJ1
CCK
CCK1
CCL
CCL1
CCM
CCM1
CCN
CCN1
CCP
CCP1
CCQ
CCQ1
CCR
CCR1
CCS
CCS1
CCT
CCT1
CCU
CCU1
CCV
CCV1
CCW
CCW1
CCX
CCX1
CCY
CCY1
CCZ
CCZ1
CCAA
CCAA1
CCB
CCB1
CCC
CCC1
CCD
CCD1
CCE
CCE1
CCF
CCF1
CCG
CCG1
CCH
CCH

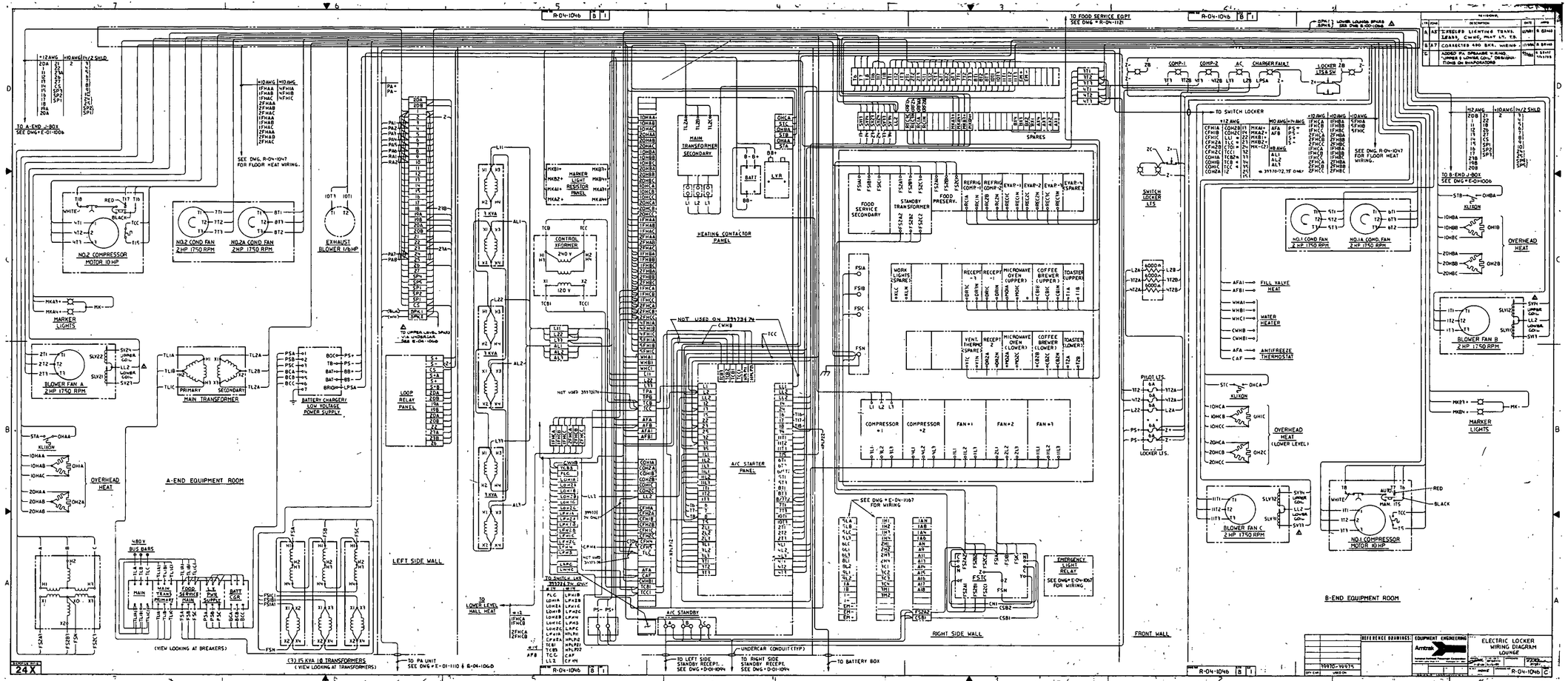
A-END EQUIPMENT ROOM
B-END EQUIPMENT ROOM
LEFT SIDE WALL
RIGHT SIDE WALL
FRONT WALL
NO.2 COMPRESSOR MOTOR 10 HP
NO.2 COND FAN 2 HP 1750 RPM
NO.2A COND FAN 2 HP 1750 RPM
EXHAUST BLOWER 1/6 HP
MARKER LIGHTS
BLOWER FAN A 2 HP 1750 RPM
MAIN TRANSFORMER
BATTERY CHARGER/ LOW VOLTAGE POWER SUPPLY
LOOP RELAY PANEL
OVERHEAD HEAT
480V BUS BARS
(VIEW LOOKING AT BREAKERS)
(3) 15 KVA 1Ø TRANSFORMERS (VIEW LOOKING AT TRANSFORMERS)
HEATING CONTACTOR PANEL
A/C STARTER PANEL
A/C STANDBY
MAIN TRANSFORMER SECONDARY
CONTROL XFORMER
FOOD SERVICE SECONDARY
STANDBY TRANSFORMER
FOOD PRESERV.
SPARES
WORK LIGHTS SPARE
RECEPT -1
RECEPT -2
MICROWAVE OVEN (UPPER)
COFFEE BREWER (UPPER)
TOASTER (UPPER)
VENT. THERMO SPARE
MICROWAVE OVEN (LOWER)
COFFEE BREWER (LOWER)
TOASTER (LOWER)
COMPRESSOR #1
COMPRESSOR #2
FAN #1
FAN #2
FAN #3
SWITCH LOCKER LS
PILOT LTS
LOCKER LTS.
KLIXON
FILL VALVE HEAT
WATER HEATER
ANTIFREEZE THERMOSTAT
NO.1 COND FAN 2 HP 1750 RPM
NO.1A COND. FAN 2 HP 1750 RPM
BLOWER FAN B 2 HP 1750 RPM
BLOWER FAN C 2 HP 1750 RPM
NO.1 COMPRESSOR MOTOR 10 HP
MAN. ITS
EMERGENCY LIGHT RELAY
TO SWITCH LOCKER
TO A-END J-BOX
TO B-END J-BOX
TO FOOD SERVICE EQPT
TO LOWER LEVEL HALL HEAT
TO PA UNIT
TO LEFT SIDE STANDBY RECEPT.
TO RIGHT SIDE STANDBY RECEPT.
TO BATTERY BOX
UNDERCAR CONDUIT (TYP.)
NOT USED ON 3593236
NOT USED 3593176
SEE DWG R-04-1047 FOR FLOOR HEAT WIRING.
SEE DWG R-04-1067 FOR WIRING.
ELECTRIC LOCKER WIRING DIAGRAM LOUNGE
EQUIPMENT ENGINEERING
Amtrak
3593-9107A
R-04-1046
24X

15

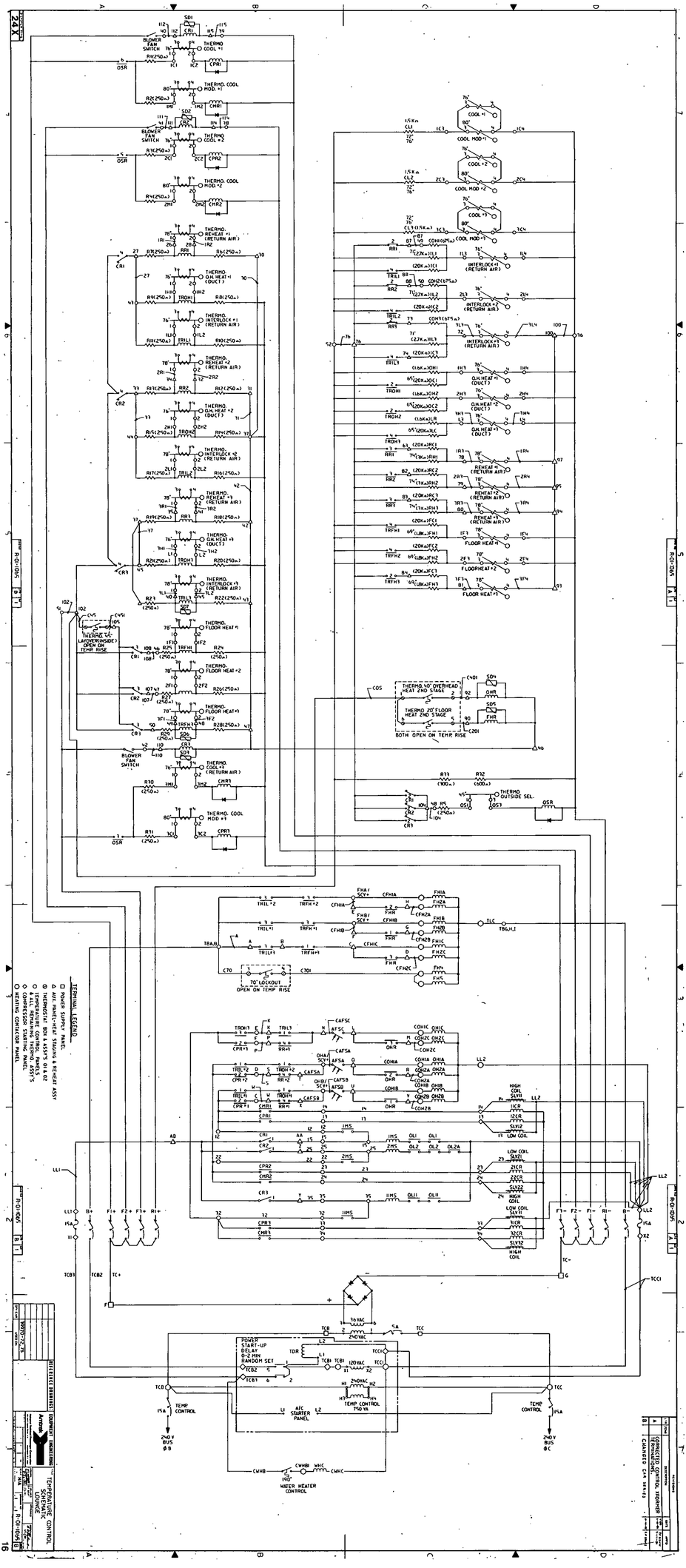
TERMINAL LEGEND
POWER SUPPLY PANEL
AUX. PANEL-HEAT STAGING & REHEAT ASSY
THERMOSTAT BOX & ASSY'S 01 & 02
FAN, REHEATING THERMO. ASSY'S
COMPRESSOR STARTING PANEL
HEATING CONTACTOR PANEL
TEMPERATURE CONTROL SCHEMATIC
CHANGED 4-24 SERIES
TEMP CONTROL
AFC STARTER PANEL
TEMP CONTROL 750 VA
WATER HEATER CONTROL
POWER START-UP DELAY RANDOM SET
THERMO 40° OVERHEAD HEAT 2ND STAGE
THERMO 20° FLOOR HEAT 2ND STAGE
BOTH OPEN ON TEMP RISE
THERMO. OUTSIDE SEL.
BLOWER FAN SWITCH
THERMO. COOL MOD #1
THERMO. COOL MOD #2
THERMO. COOL #1
THERMO. COOL #2
THERMO. REHEAT #1 (RETURN AIR)
THERMO. O.H. HEAT #1 (DUCT)
THERMO. INTERLOCK #1 (RETURN AIR)
THERMO. REHEAT #2 (RETURN AIR)
THERMO. O.H. HEAT #2 (DUCT)
THERMO. INTERLOCK #2 (RETURN AIR)
THERMO. REHEAT #3 (RETURN AIR)
THERMO. O.H. HEAT #3 (DUCT)
THERMO. INTERLOCK #3 (RETURN AIR)
THERMO. FLOOR HEAT #1
THERMO. FLOOR HEAT #2
THERMO. FLOOR HEAT #3
THERMO. COOL #3
THERMO. COOL MOD #3
COOL #1
COOL #2
COOL #3
COOL MOD #1
COOL MOD #2
INTERLOCK #1 (RETURN AIR)
INTERLOCK #2 (RETURN AIR)
INTERLOCK #3 (RETURN AIR)
O.H. HEAT #1 (DUCT)
O.H. HEAT #2 (DUCT)
O.H. HEAT #3 (DUCT)
REHEAT #1 (RETURN AIR)
REHEAT #2 (RETURN AIR)
REHEAT #3 (RETURN AIR)
FLOOR HEAT #1
FLOOR HEAT #2
FLOOR HEAT #3
TO LOCKOUT
OPEN ON TEMP RISE
HIGH COIL
LOW COIL
HIGH COIL SLV#1
LOW COIL SLV#1
HIGH COIL SLV#2
LOW COIL SLV#2
HIGH COIL SLV#3
LOW COIL SLV#3
2ND V BUS ØB
2ND V BUS ØC
TEMP CONTROL
TEMP CONTROL
TEMP CONTROL

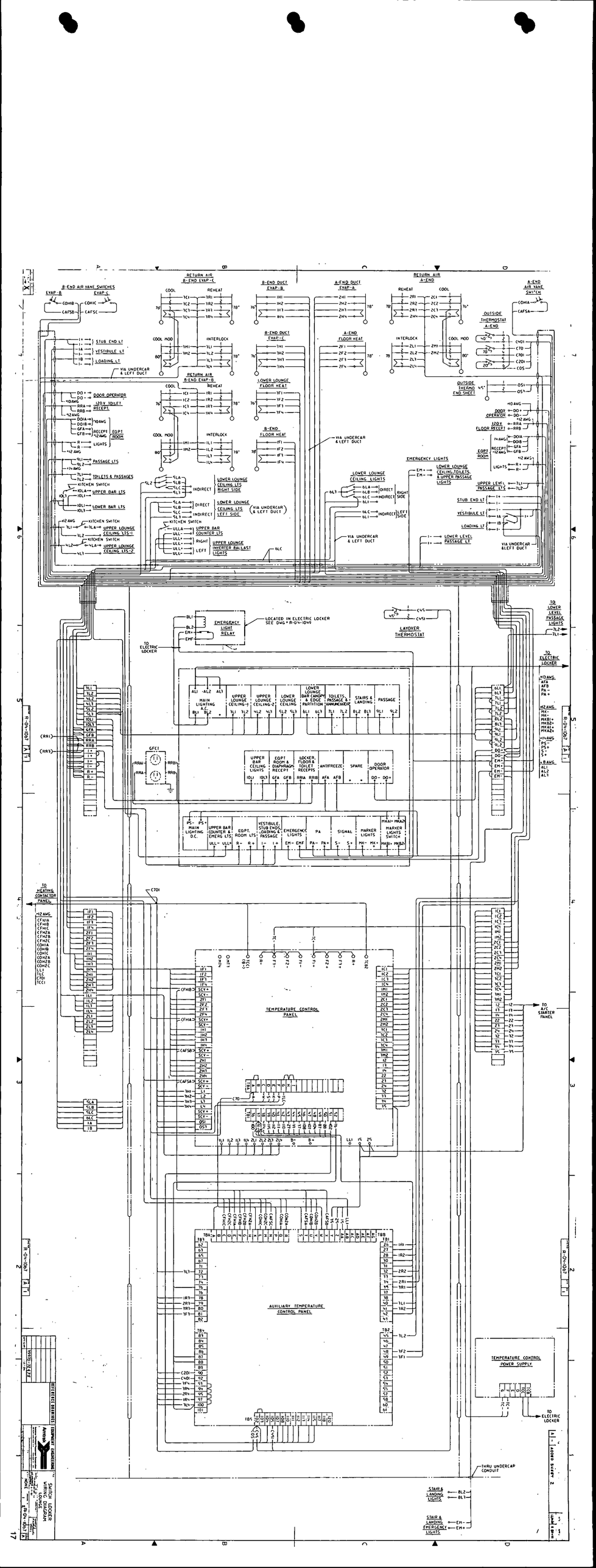
B-END AIR VANE SWITCHES
EVAP-B
EVAP-C
RETURN AIR B-END EVAP-C
B-END DUCT EVAP-C
A-END DUCT EVAP-A
RETURN AIR A-END
A-END AIR VANE SWITCH
OUTSIDE THERMOSTAT A-END
STUB END LT
VESTIBULE LT
LOADING LT
DOOR OPERATOR
120V TOILET RECEPT
RECEPT
EQPT ROOM
LIGHTS
PASSAGE LTS
TOILETS & PASSAGES
KITCHEN SWITCH
UPPER BAR LTS
LOWER BAR LTS
UPPER LOUNGE CEILING LTS-1
UPPER LOUNGE CEILING LTS-2
RETURN AIR B-END EVAP-B
B-END DUCT EVAP-B
B-END FLOOR HEAT
A-END FLOOR HEAT
LOWER LOUNGE FLOOR HEAT
VIA UNDERCAR & LEFT DUCT
OUTSIDE THERMO END SHEET
EMERGENCY LIGHTS
LOWER LOUNGE CEILING LIGHTS
LOWER LOUNGE CEILING,TOILETS & UPPER PASSAGE LIGHTS
UPPER LEVEL PASSAGE LTS
LOWER LEVEL PASSAGE LT
INDIRECT
DIRECT
RIGHT SIDE
LEFT SIDE
LOWER LOUNGE CEILING LTS RIGHT SIDE
LOWER LOUNGE CEILING LTS LEFT SIDE
KITCHEN SWITCH
UPPER BAR COUNTER LTS
UPPER LOUNGE INVERTER BALLAST LIGHTS
RIGHT
LEFT
EMERGENCY LIGHT RELAY
LOCATED IN ELECTRIC LOCKER SEE DWG R-0-04-1049
TO ELECTRIC LOCKER
LAYOVER THERMOSTAT
TO LOWER LEVEL PASSAGE LIGHTS
MAIN LIGHTING A.C.
UPPER LOUNGE CEILING-1
UPPER LOUNGE CEILING-2
LOWER LOUNGE CEILING
LOWER LOUNGE BAR CANOPY & EDGE PARTITION
TOILETS, PASSAGE & ANNUNCIATOR
STAIRS & LANDING
PASSAGE
UPPER BAR CEILING LIGHTS
EQPT ROOM & DIAPHRAGM RECEPT
LOCKER, FLOOR & TOILET RECEPTS
ANTIFREEZE
SPARE
DOOR OPERATOR
MAIN LIGHTING D.C.
UPPER BAR COUNTER & EMERG LTS
EQPT. ROOM LTS
VESTIBULE, STUB ENDS, LOADING & PASSAGE
EMERGENCY LIGHTS
PA
SIGNAL
MARKER LIGHTS
MARKER LIGHTS SWITCH
GFCI
TO HEATING CONTACTOR PANEL
TEMPERATURE CONTROL PANEL
TO A/C SUBURBER PANEL
AUXILIARY TEMPERATURE CONTROL PANEL
TEMPERATURE CONTROL POWER SUPPLY
TO ELECTRIC LOCKER
THRU UNDERCAR CONDUIT
STAIR & LANDING LIGHTS
STAIR & LANDING EMERGENCY LIGHTS
R-0-04-1047
R-0-04-1048
R-0-04-1049
R-0-04-1050
R-0-04-1051
R-0-04-1052
R-0-04-1053
R-0-04-1054
R-0-04-1055
R-0-04-1056
R-0-04-1057
R-0-04-1058
R-0-04-1059
R-0-04-1060
R-0-04-1061
R-0-04-1062
R-0-04-1063
R-0-04-1064
R-0-04-1065
R-0-04-1066
R-0-04-1067
R-0-04-1068
R-0-04-1069
R-0-04-1070
R-0-04-1071
R-0-04-1072
R-0-04-1073
R-0-04-1074
R-0-04-1075
R-0-04-1076
R-0-04-1077
R-0-04-1078
R-0-04-1079
R-0-04-1080
R-0-04-1081
R-0-04-1082
R-0-04-1083
R-0-04-1084
R-0-04-1085
R-0-04-1086

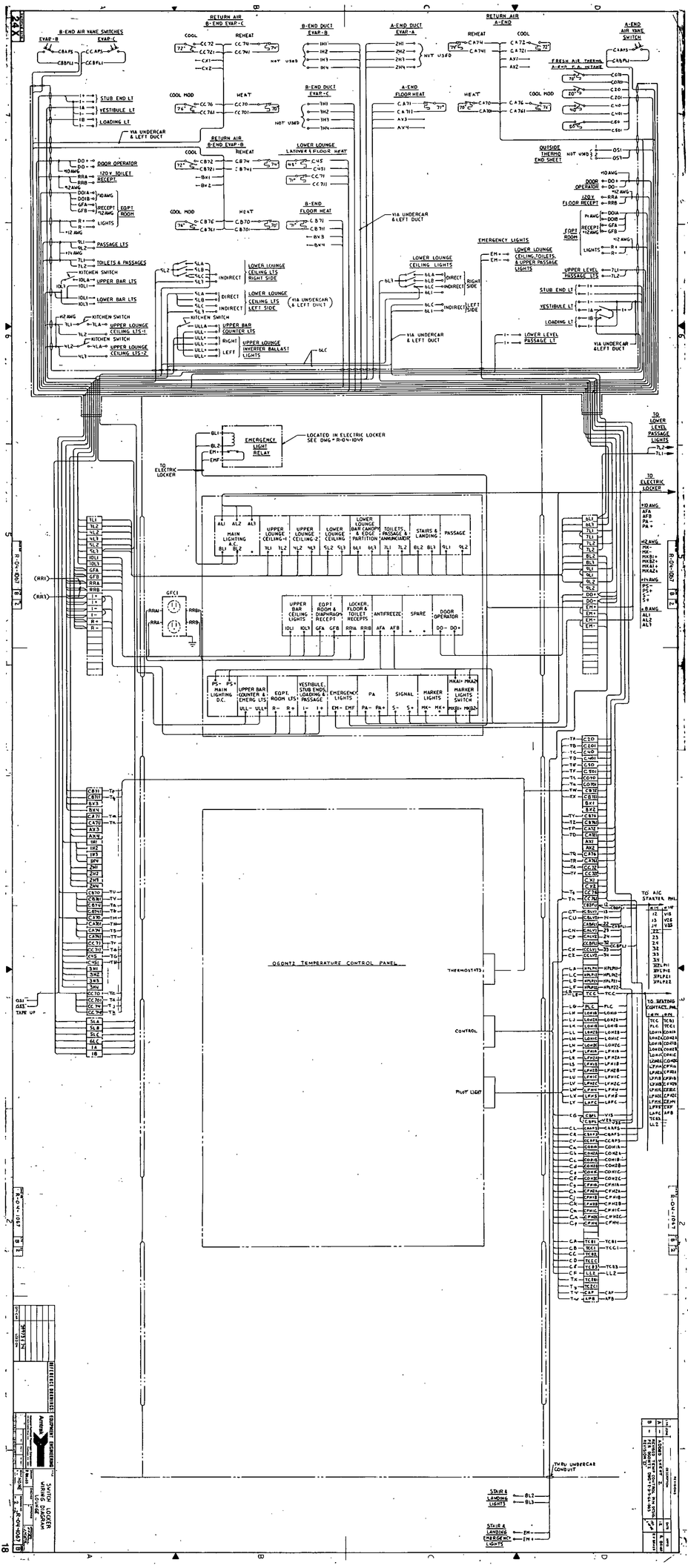
B-END AIR VANE SWITCHES
EVAP-B
EVAP-C
RETURN AIR B-END EVAP-C
B-END DUCT EVAP-B
A-END DUCT EVAP-A
RETURN AIR A-END
A-END AIR VANE SWITCH
FRESH AIR THERMO AUTO. CAP. INTAKE
STUB END LT
VESTIBULE LT
LOADING LT
VIA UNDERCAR & LEFT DUCT
RETURN AIR B-END EVAP-B
B-END DUCT EVAP-C
A-END FLOOR HEAT
OUTSIDE THERMO END SHEET
DOOR OPERATOR
120V TOILET RECEPT
120V FLOOR RECEPT
EQPT ROOM RECEPT
LIGHTS
LOWER LOUNGE LATCHES & FLOOR HEAT
B-END FLOOR HEAT
PASSAGE LTS
TOILETS & PASSAGES
KITCHEN SWITCH
UPPER BAR LTS
LOWER BAR LTS
UPPER LOUNGE CEILING LTS-1
UPPER LOUNGE CEILING LTS-2
LOWER LOUNGE CEILING LTS RIGHT SIDE
LOWER LOUNGE CEILING LTS LEFT SIDE
UPPER BAR COUNTER LTS
UPPER LOUNGE INVERTER BALLAST LIGHTS
LOWER LOUNGE CEILING LIGHTS
EMERGENCY LIGHTS
LOWER LOUNGE CEILING, TOILETS & UPPER PASSAGE LIGHTS
UPPER LEVEL PASSAGE LTS
LOWER LEVEL PASSAGE LT
EMERGENCY LIGHT RELAY
LOCATED IN ELECTRIC LOCKER SEE DWG R-604-1049
TO ELECTRIC LOCKER
MAIN LIGHTING D.C.
UPPER LOUNGE CEILING-1
UPPER LOUNGE CEILING-2
LOWER LOUNGE CEILING
LOWER LOUNGE BAR CANOPY & EDGE PARTITION
TOILETS, PASSAGE & ANNUNCIATOR
STAIRS & LANDING
PASSAGE
GFCI
UPPER BAR CEILING LIGHTS
EQPT ROOM & DIAPHRAGM RECEPT
LOCKER, FLOOR & TOILET RECEPTS
ANTIFREEZE
SPARE
DOOR OPERATOR
UPPER BAR COUNTER & EMERG LTS
EQPT. ROOM LTS
VESTIBULE, STUB ENDS, LOADING & PASSAGE
EMERGENCY LIGHTS
PA
SIGNAL
MARKER LIGHTS
MARKER LIGHTS SWITCH
TO A/C STARTER PNL
TO SEATING CONTACT PNL
OSCONTZ TEMPERATURE CONTROL PANEL
THERMOSTATS
CONTROL
PILOT LIGHT
THRU UNDERCAR CONDUIT
STAIR & LANDING LIGHTS
STAIR & LANDING EMERGENCY LIGHTS
TAPE UP
SWITCH LOCATION
R-604-1007
R-604-1009
R-604-1049

R-04-1121 A 1

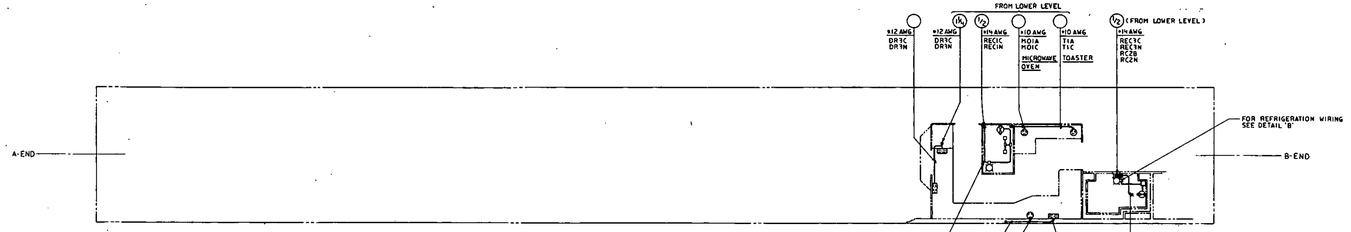

UPPER LEVEL

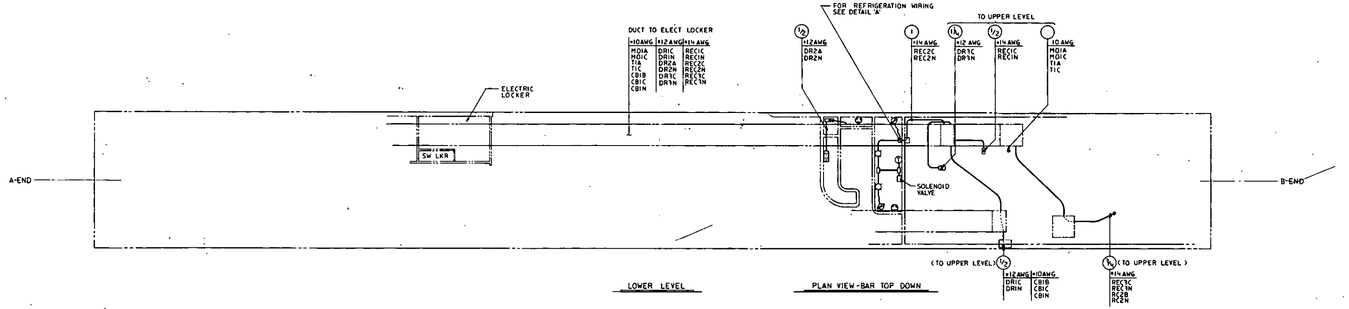

LOWER LEVEL

PLAN VIEW-BAR TOP DOWN

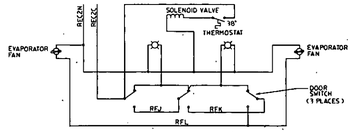

DETAIL 'A'

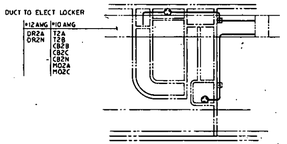

PLAN VIEW-ABOVE BAR TOP

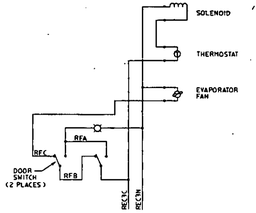

DETAIL 'B'

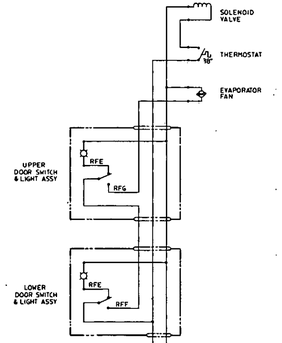

DETAIL 'C'

NOTE:
WIRING FOR ALL 208 VOLT RECEPTACLES IS INTENTIONALLY OVERSIZED.

LTR	ZONE	DESCRIPTION	DATE	APPD
A		RELOCATED UPPER BAR RECEPTS PER NEW BAR CONFIGURATION.		

REFERENCE DRAWINGS

EQUIPMENT ENGINEERING

Amtrak

FOOD SERVICE EQPT CONDUIT & WIRING LOUNGE

9970-9979

N/A

R-04-1121 A 1

24X

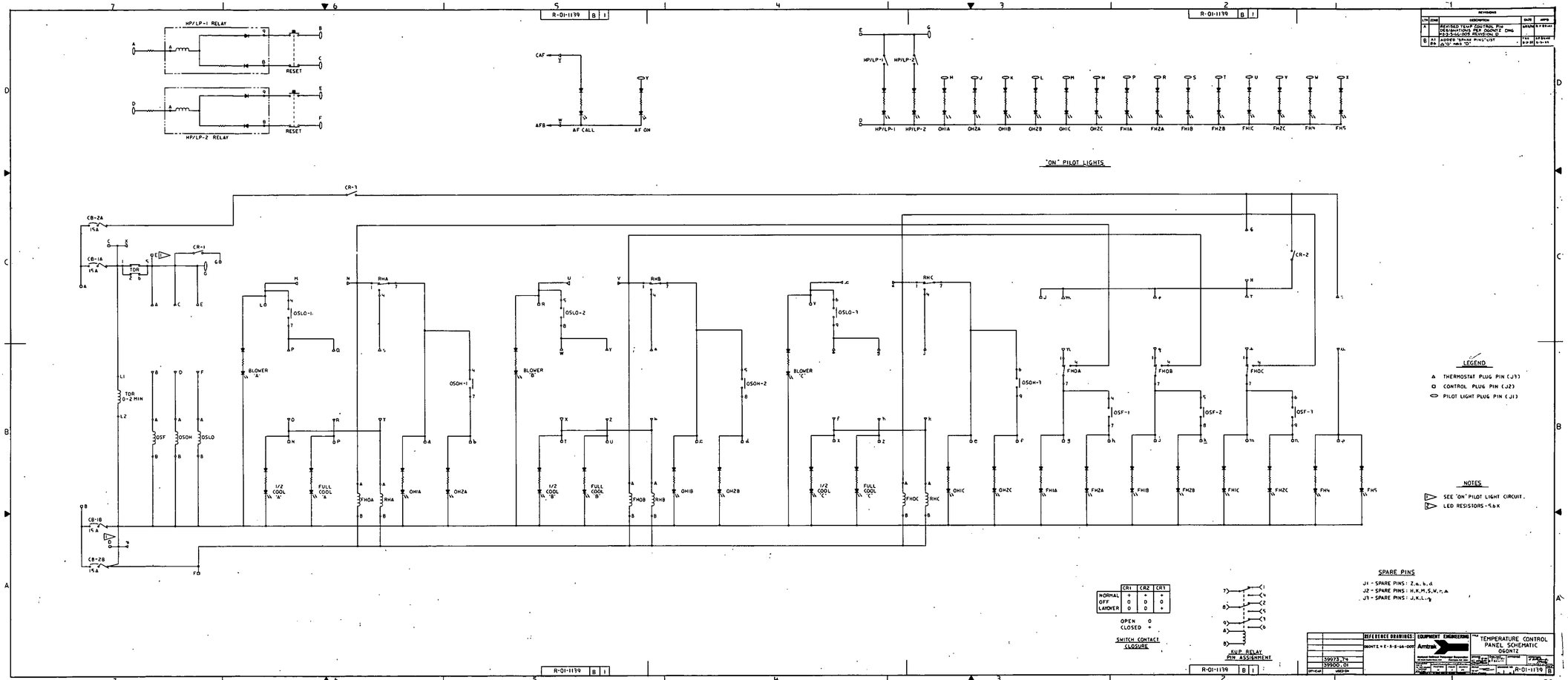

HP/LP-1 RELAY
HP/LP-2 RELAY
RESET
AF CALL
AF ON
"ON" PILOT LIGHTS
CR-3
CR-1
CR-2
CB-2A 15A
CB-1A 15A
CB-1B 15A
CB-2B 15A
TDR
TDR 0-2 MIN
OSF
OSOH
OSLO
BLOWER 'A'
BLOWER 'B'
BLOWER 'C'
OSLO-1
OSLO-2
OSLO-3
OSOH-1
OSOH-2
OSOH-3
OSF-1
OSF-2
OSF-3
1/2 COOL 'A'
FULL COOL 'A'
1/2 COOL 'B'
FULL COOL 'B'
1/2 COOL 'C'
FULL COOL 'C'
RHA
RHB
RHC
FHOA
FHOB
FHOC
OHIA
OHIB
OHIC
OH2A
OH2B
OH2C
FH1A
FH2A
FH1B
FH2B
FH1C
FH2C
FH4
FH5
LEGEND
THERMOSTAT PLUG PIN (J3)
CONTROL PLUG PIN (J2)
PILOT LIGHT PLUG PIN (J1)
NOTES
1 SEE "ON" PILOT LIGHT CIRCUIT.
2 LED RESISTORS - 5.6K
SPARE PINS
J1 - SPARE PINS: Z, a, b, d
J2 - SPARE PINS: H, K, M, S, W, r, a
J3 - SPARE PINS: J, K, L, g
CR1 CR2 CR3
NORMAL + + +
OFF 0 0 0
LAYOVER 0 0 +
OPEN 0
CLOSED +
SWITCH CONTACT CLOSURE
KUP RELAY PIN ASSIGNMENT
REFERENCE DRAWINGS:
OGONTZ = E-5-5-66-005
EQUIPMENT ENGINEERING
Amtrak
TEMPERATURE CONTROL PANEL SCHEMATIC OGONTZ
39973.74
39900.01
R-01-1139 B 1

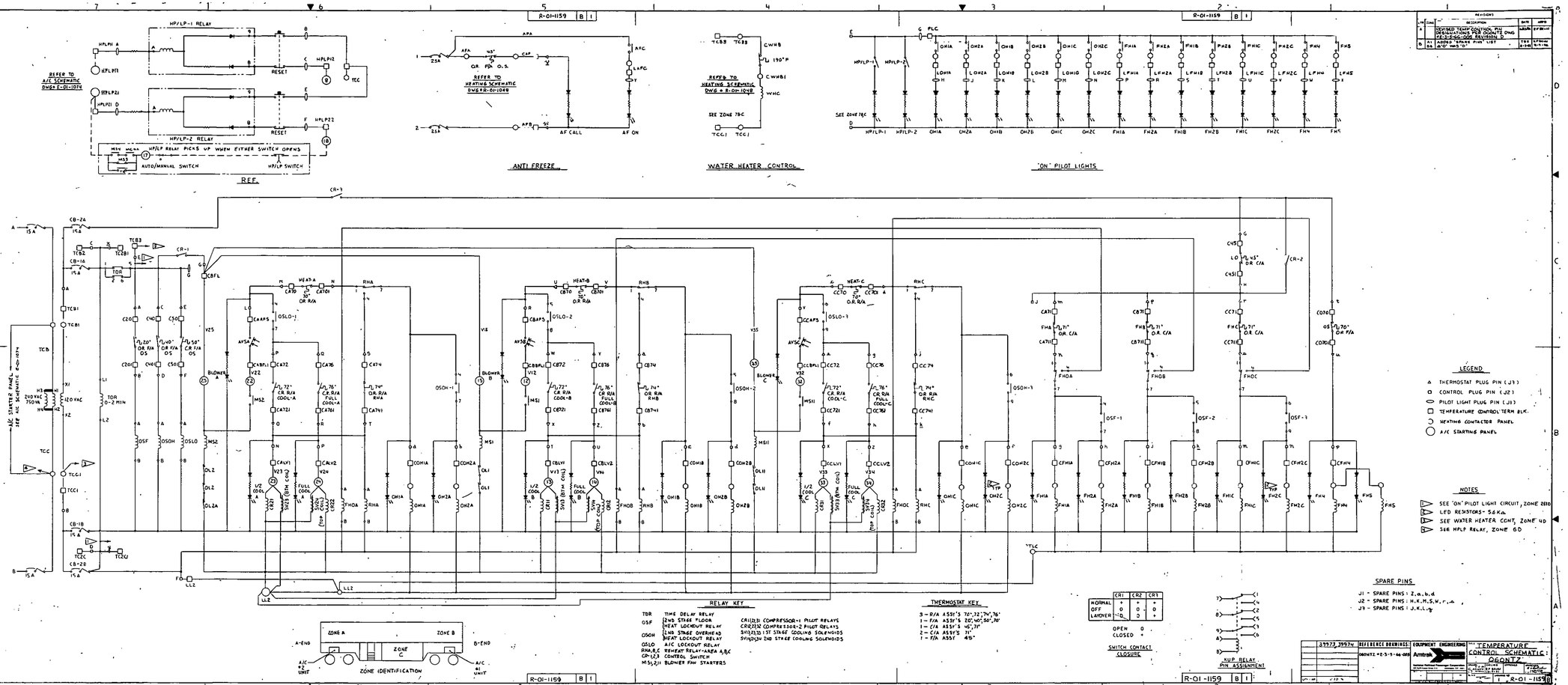
HP/LP-1 RELAY
HP/LP-2 RELAY
HP/LP RELAY PICKS UP WHEN EITHER SWITCH OPENS
AUTO/MANUAL SWITCH
HP/LP SWITCH
REF.
REFER TO A/C SCHEMATIC DWG# E-01-1074
ANTI FREEZE
REFER TO HEATING SCHEMATIC DWG# E-01-1068
WATER HEATER CONTROL
'ON' PILOT LIGHTS
A/C STARTER PANEL SEE A/C SCHEMATIC E-01-1074
240VAC 750VA
120 VAC
TDR 0-2 MIN
ZONE A
ZONE B
ZONE C
A-END
B-END
A/C #2 UNIT
A/C #1 UNIT
ZONE IDENTIFICATION
RELAY KEY
TDR TIME DELAY RELAY
OSF 2ND STAGE FLOOR HEAT LOCKOUT RELAY
OSOH 2ND STAGE OVERHEAD HEAT LOCKOUT RELAY
OSLO A/C LOCKOUT RELAY
RHA,B,C REHEAT RELAY-AREA A,B,C
CR-1,2,3 CONTROL SWITCH
MS1,2,11 BLOWER FAN STARTERS
CR11,21 COMPRESSOR-1 PILOT RELAYS
CR12,22 COMPRESSOR-2 PILOT RELAYS
SV13,23,33 1 ST STAGE COOLING SOLENOIDS
SV14,24,34 2ND STAGE COOLING SOLENOIDS
THERMOSTAT KEY
3 - R/A A59'S 70°,72°,74°,76°
1 - F/A A59'S 80°,90°,50°,70°
1 - C/A A59'S 40°,70°
2 - C/A A59'S 71°
1 - F/A A55' 45°
NORMAL
OFF
LAUNCH
OPEN
CLOSED
SWITCH CONTACT CLOSURE
HUP RELAY PIN ASSIGNMENT
LEGEND
THERMOSTAT PLUG PIN (J3)
CONTROL PLUG PIN (J2)
PILOT LIGHT PLUG PIN (J1)
TEMPERATURE CONTROL TERM BLK.
HEATING CONTACTOR PANEL
A/C STARTING PANEL
NOTES
SEE 'ON' PILOT LIGHT CIRCUIT, ZONE 2B,D
LED RESISTORS - 5.6K Ω
SEE WATER HEATER CONT, ZONE 4D
SEE HP/LP RELAY, ZONE 6D
SPARE PINS
J1 - SPARE PINS : Z,a,b,d
J2 - SPARE PINS : H,K,M,S,W,r,s,
J3 - SPARE PINS : J,K,L,q
REVISIONS
DESCRIPTION
DATE
APPD
DIVIMED TEMP CONTROL PCB DESIGNATIONS PER OGCNTZ DWG #E-5-5-66-008 REVISION 5
SEE SPARE PINS "LIST" AND "D"
TEMPERATURE CONTROL SCHEMATIC OGCNTZ
EQUIPMENT ENGINEERING
Amtrak
REFERENCE DRAWINGS
OGCNTZ-E-5-5-66-008
R-01-1159 B 1
21

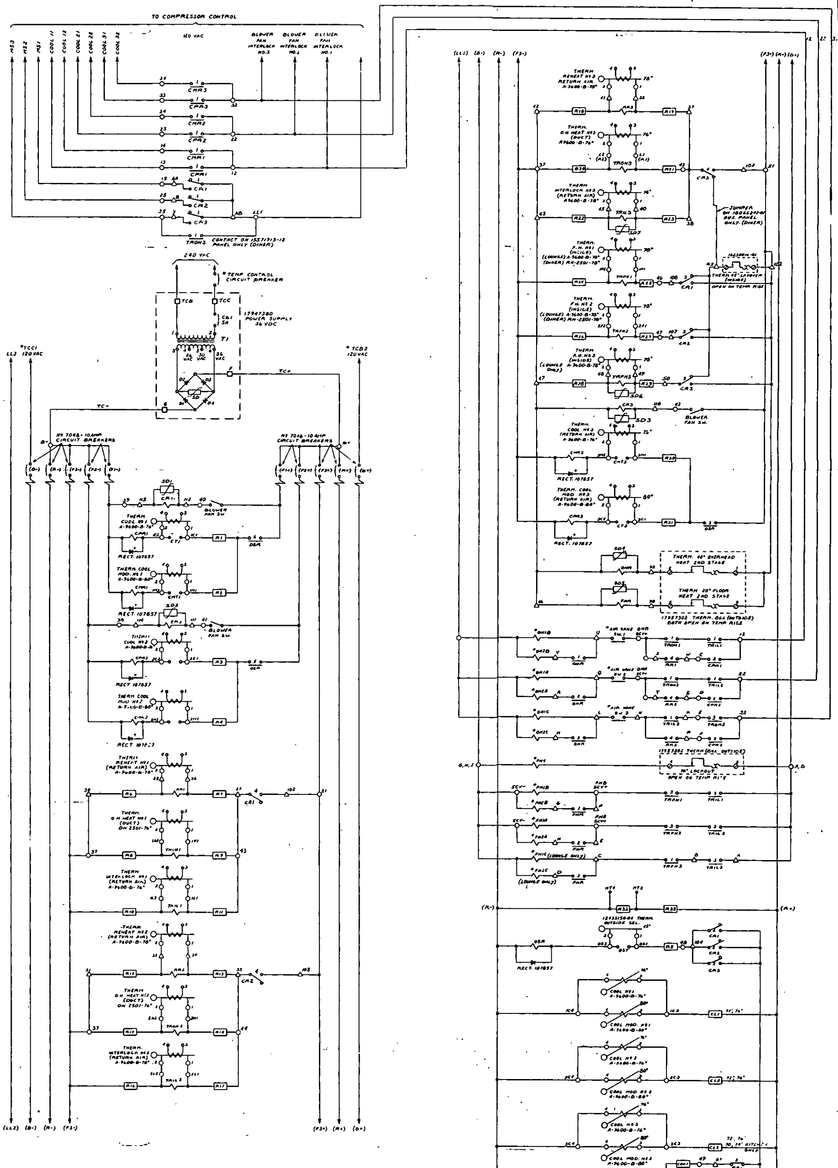
TO COMPRESSION CONTROL
460 VAC
BLOWER FAN INTERLOCK NO.3
BLOWER FAN INTERLOCK NO.4
OUTSIDE FAN INTERLOCK NO.5
CONTACT ON (3ST)(3-3 PANEL ONLY (DOMER)
240 VAC
*TEMP CONTROL CIRCUIT BREAKER
1784280 POWER SUPPLY 24 VDC
T1
*TCC1
*TCC2
TC+
TC-
40 AMP 3-POLE CIRCUIT BREAKERS
BLOWER FAN 3+4
BLOWER FAN 5
REMOTE SENSOR
THERM. 1ST FLOOR HEAT 2ND STAGE
THERM. 2ND FLOOR HEAT 2ND STAGE
1787302 THERM. SAS (METRICK) BATH SPACE 8+ TECHN RISE
THERM. 1ST BEDROOM HEAT 2ND STAGE
1787302 THERM. SAS (METRICK) BATH SPACE 8+ TECHN RISE
THERM. 2ND FLOOR HEAT 2ND STAGE
THERM. 1ST BEDROOM HEAT 2ND STAG

HERITAGE FLEET ELECTRICAL SCHEMATICS

	DRAWING NO.	TITLES/DESCRIPTION
1	D-04-414	ELECTRICAL AND ELECTRONIC SYMBOLS
2	D-07-601	A/C AND REFRIGERATION SYMBOLS
3	C-05-1313	STANDARD DRAWING FORMAT
4	E-01-767	TEMPERATURE CONTROL SCHEMATIC BAG DORM 1610-1617
5	E-01-1700	TEMPERATURE CONTROL SCHEMATIC BAG DORM 1618-1627
6	E-01-771	TEMPERATURE CONTROL SCHEMATIC SLUMBER COACH 2050-2056 2080-2095
7	E-01-770	TEMPERATURE CONTROL SCHEMATIC SLEEPER 2430-2482 2871-2896
8	E-01-779	TEMPERATURE CONTROL SCHEMATIC LOUNGE 3100-3128
9	E-01-768	TEMPERATURE CONTROL SCHEMATIC COACH 4000-4026 4600-4650 4700-4742 5000-5008 7000-7007 7600-7618
10	E-01-769	TEMPERATURE CONTROL SCHEMATIC DINER 8500-8528
11	E-01-772	TEMPERATURE CONTROL SCHEMATIC DINER (KITCHEN) 8500-8528
12	B.G. DEC 1983	TEMPERATURE CONTROL SCHEMATIC DOME
13	E-01-755	HEATING AND A/C WIRING BAG DORM 1610-1613
14	E-01-860	HEATING AND A/C WIRING BAG DORM 1614-1617
15	E-01-756	HEATING AND A/C WIRING SLUMBER COACH 2050-2056
16	E-01-861	HEATING AND A/C WIRING SLUMBER COACH 2080-2095
17	E-01-1673	HEATING AND A/C WIRING SLEEPER 2430-2456
18	E-01-1677	HEATING AND A/C WIRING SLEEPER 2457-2460

HERITAGE FLEET ELECTRICAL SCHEMATICS

	DRAWING NO.	TITLES/DESCRIPTION
19	E-01-757	HEATING AND A/C WIRING SLEEPER 2880-2883
20	E-91-862	HEATING AND A/C WIRING SCHEMATIC 2884-2894
21	E-01-758	HEATING AND A/C WIRING LOUNGE 3100-3105
22	E-01-863	HEATING AND A/C WIRING LOUNGE 3106-3112
23	E-01-759	HEATING AND A/C WIRING COACH 4600-4650
24	E-01-864	HEATING AND A/C WIRING COACH 4700-4742 7000-7007 5000-5008 7600-7618
25	E-01-754	HEATING AND A/C WIRING DINER 8500-8504
26	E-01-865	HEATING AND A/C WIRING DINER 8505-8528
27	E-01-700	SCHEMATIC DIAGRAM A/C CONTROL
28	D-01-750	SCHEMATIC ANTIFREEZE - WATER PROTECTION
29	E-04-760	ANTIFREEZE - WATER PROTECTION INSTALLATION
30	E-04-546	ANTIFREEZE - WATER PROTECTION INSTALLATION
31	E-01-837	LIGHTING AND CONV. OUTLETS BAG DORM 1614-1637
32	E-01-724	LIGHTING AND CONV. OUTLETS SLUMBERCOACH 2050-2056
33	E-01-834	LIGHTING AND CONV. OUTLETS SLUMBERCOACH 2080-2095
34	E-01-168	LIGHTING AND CONV. OUTLETS 10/6 SLEEPER HC 2871-2879 2430-2481
35	E-01-725	LIGHTING AND CONV. OUTLETS 10/6 SLEEPER 2880-2896
36	E-01-726	LIGHTING AND CONV. OUTLETS LOUNGE 3100-3105
37	E-91-835	LIGHTING AND CONV. OUTLETS LOUNGE 3106-3127
38	E-01-1685	LIGHTING AND CONV. OUTLET COACH 4600-4016
39	E-01-706	LIGHTING AND CONV. OUTLET COACH 4600-4650
40	E-01-836	LIGHTING AND CONV. OUTLET COACH 4700-4742 7000-7007 5000-5008 7600-7618

HERITAGE FLEET ELECTRICAL SCHEMATICS

	DRAWING NO.	TITLES/DESCRIPTION
41	E-01-727	LIGHTING AND CONV. OUTLET DINER 8500-8508
42	E-01-1687	LIGHTING AND CONV. OUTLET DINER 8511-8528
43	E-01-536	COMMUNICATION TRAINLINE SCHEMATIC BAG DORM AND SLUMBER
44	E-01-602	COMMUNICATION TRAINLINE SCHEMATIC COACH AND SLEEPER
45	D-01-775	PUBLIC ADDRESS WIRING DIAGRAM BAG DORM AND SLEEPER
46	D-04-744	PUBLIC ADDRESS WIRING DIAGRAM LOUNGE
47	D-04-737	PUBLIC ADDRESS WIRING DIAGRAM COACH
48	D-04-774	PUBLIC ADDRESS WIRING DIAGRAM DINER
49	D-01-524	MAIN POWER DISTRIBUTION 480V 3Ø 60 HZ SCHEMATIC
50	D-01-717	SINGLE LINE POWER SCHEMATIC BAG DORM CAR 1610-1613
51	D-01-880	SINGLE LINE POWER SCHEMATIC BAG DORM CAR 1614-1637
52	D-01-718	SINGLE LINE POWER SCHEMATIC SLUMBER COACH AND SLEEPER 2871-2879 2030-2095 2430-2482
53	D-01-719	SINGLE LINE POWER SLEEPER CARS 2880-2896
54	D-01-720	SINGLE LINE POWER LOUNGE 4000-4026 3106-3127
55	E-01-521	SINGLE LINE POWER COACH 4600-4650 7000-4742 5000-5008 7600-7618 7000-7007 7600-7618
56	D-01-721	SINGLE LINE POWER DINER CAR 8500-8528
57		BG PRINTS
58		BG PRINTS
59	D-04-751	AC & DC POWER SUPPLY WIRING 120V AC & 64V DC
60	DGIES100	KNIFE BATTERY CHARGER
61	SKE-50746	MCGRAW EDISON BATTERY CHARGER
62	D-00-539	AUXILIARY PANEL

HERITAGE FLEET ELECTRICAL SCHEMATICS

	DRAWING NO.	TITLES/DESCRIPTION
63	R-04-761	WIRING SCHEMATIC BAG DORM
64	R-04-763	WIRING SCHEMATIC SLEEPER CAR
65	E-04-651	OVERHEAD CONDUIT AND WIRING COACH
66	D-01-527	E-5 DECELOSTAT CONTROLLER SYSTEM
67	G-01-715	GAYLORD VENTILATOR CONTROL DINER
68	D-04-822	SCHEMATIC WIRING LOAD DATA LOUNGE
69	D-04-821	SCHEMATIC WIRING LOAD KITCHEN
70	D-01-538	SYSTEM SCHEMATIC DIAGRAM FOOD SERVICE POWER DINER
71	D-01-793	REFRIGERATION SCHEMATIC EVAPORATOR'S DINER
72	D-01-794	REFRIGERATION EQUIPMENT SCHEMATIC COMPRESSOR/CONDENSER
73	D-01-1660	REFRIGERATION EQUIPMENT SCHEMATIC COMPRESSOR/CONDENSER
74	D-01-795	REFRIGERATION SCHEMATIC EVAPORATORS LOUNGE
75	D-01-796	REFRIGERATION EQUIPMENT SCHEMATIC COMPRESSOR/CONDENSER
76	14776-300-901	TIA OVEN MODEL 1636-5C
77		MARKET FRGE CONVECTION OVEN
78	AM-ES-12	HOBART DISHWASHER DINER
79		MICROWAVE
80		
81	R-01-722	WIRING SCHEMATIC PROGRAM CAR
82	D-01-565	TEMPERTAURE CONTROL SCHEMATIC BAGGAGE CAR
83	D-01-716	SINGLE LINE SCHEMATIC BAGGAGE CAR 1126-1132 1140-1169 1137-1138 1203-1272
84	D-01-1710	SINGLE LINE SCHEMATIC BAGGAGE CAR 1133-1136 1170-1177 1139
85	D-04-745	PUBLIC ADDRESS WIRING DIAGRAM BAGGAGE CARS

HERITAGE FLEET ELECTRICAL SCHEMATICS

	DRAWING NO.	TITLES/DESCRIPTION
86	E-04-913	ELECTRIC LOCKER WIRING 1350-1379
87	E-01-911	COMMUNICATION AND TRAINLINE SCHEMATIC 1350-1379
88	D-04-458	COMMUNICATION AND TRAINLINE SCHEMATIC 1126-1177 1203-1272
89	D-01-912	SINGLE LINE POWER SCHEMATIC BAGGAGE CAR 1350-1379
90	D-01-915	TEMPERATURE CONTROL SCHEMATIC BAGGAGE CAR 1350-1379
91		
92		
93		BLANKS FOR 2900 SERIES PRINTS
94		
95		
96		
97		
98		
99		
100		
101		
102		
103		
104		
105	D-01-473	TEMPERATURE CONTROL PANEL SLEEPER 2700
106	E-00-474	TEMPERATURE CONTROL PANEL SLEEPER 2900
107		
108		

HERITAGE FLEET ELECTRICAL SCHEMATICS

DRAWING NO.	TITLES/DESCRIPTION
109	
110	
111	
112	

HERITAGE FLEET ELECTRICAL SCHEMATICS

	DRAWING NO.	TITLES/DESCRIPTION
1	R-04-1011	ELECTRIC LOCKER WIRING DIAGRAM COACH/DORM 39902-39911
2	R-04-1112	ELECTRIC LOCKER WIRING DIAGRAM COACH/DORM 39912-39923 39925-399936
3	R-01-1013	HEAT WIRING SCHEMATIC COACH/DORM 39902-39936
4	R-01-1025	TEMPERATURE CONTROL SCHEMATIC COACH/DORM 39902-39938
5	R-04-1027	WIRING DIAGRAM SWITCH LOCKER COACH/DORM 39925-39936 39912-39923
6	R-04-1087	WIRING DIAGRAM SWITCH LOCKER COACH/DORM 39902-39911
7	R-01-1155	HEAT WIRING SCHEMATIC COACH DORM 39900,01,37,38 39912-39923
8	R-01-1158	TEMPERATURE CONTROL SCEHAMTIC OGONTE COACH DORM 39902-39911
9	R-04-1165	WIRING DIAGRAM SWITCH LOCKER COACH DORM 39900,39901
10	R-01-1024	TEMPERATURE CONTROL SCHEMATIC COACH 39940-39964
11	R-04-1026	WIRING DIAGRAM SWITCH LOCKER COACH 39940-39964
12	R-04-1036	ELECTRIC LOCKER WIRING DIAGRAM COACH 39940-39964
13	R-01-1038	HEAT WIRING SCHEMATIC COACH 39940-39964
14	R-01-1157	TEMPERATURE CONTROL SCHEMATIC OGONTZ COACH 39940-39964
15	R-04-1046	ELECTRIC LOCKER WIRING DIAGRAM LOUNGE 39970-39975

HERITAGE FLEET ELECTRICAL SCHEMATICS

	DRAWING NO.	TITLES/DESCRIPTION
16	R-01-1065	TEMPERATURE CONTROL SCHEMATIC LOUNGE 39970,72,75
17	R-04-1067 (1)	SWITCH LOCKER WIRING DIAGRAM LOUNGE 39970,72,75
18	R-04-1067 (2)	SWITCH LOCKER WIRING DIAGRAM LOUNGE 39973,74
19	R-04-1121	FOOD SERVICE EQUIPMENT CONDUIT AND WIRING LOUNGE 39970-39975
20	R-01-1139	TEMPERATURE CONTROL PANEL SCHEMATIC OGONTZ
21	R-01-1159	TEMPERATURE CONTROL SCHEMATIC OGONTZ 39973,39974
22	R-01-1178	TEMPERATURE CONTROL PANEL SCHEMATIC 39970-73,75

ELECTRICAL SCHEMATICS HERITAGE FLEET

SERIES 1126-9411

Amtrak

	DRAWING NO.	TITLES/DESCRIPTION
I		Table of Contents
II		Table of Contents
III		Table of Contents
1	D-04-414	Electrical and Electronic Symbols
2	D-07-601	A/C and Refrigeration Symbols
3	E-01-767	Temperature Control Schematic Bag Dorm 1610-1617, 1628-1637
4	E-01-1700	Temperature Control Schematic Bag Dorm 1618-1627
5	E-01-771	Temperature Control Schematic Slumber Coach 2050-2056, 2080-2097
6	E-01-770	Temperature Control Schematic Sleeper 2430-2482, 2871-2896, 2220-2222, 2230-2235
7	E-01-779	Temperature Control Schematic Lounge 3100-3127
8	E-01-768	Temperature Control Schematic Coach 4000-4026, 4600-4650, 4700-4742, 5000-5008, 7000-7007, 7600-7618
9	E-01-769	Temperature Control Schematic Diner 8500-8530
10	E-01-772	Temperature Control Schematic Diner (Kitchen) 8500-8530
11	E-01-7049	Temperature Control Schematic Dome 9400-9411
12	E-01-755	Heating and A/C Wiring Bag Dorm 1610-1613
13	E-01-860	Heating and A/C Wiring Bag Dorm 1614-1617
14	E-01-756	Heating and A/C Wiring Slumber Coach 2050-2056
15	E-01-861	Heating and A/C Wiring Slumber Coach 2080-2097
16	E-01-1673	Heating and A/C Wiring Sleeper 2430-2456
17	E-01-1677	Heating and A/C Wiring Sleeper 2457-2460
18	E-01-757	Heating and A/C Wiring Sleeper 2880-2883
19	E-01-862	Heating and A/C Wiring Schematic 2884-2894
20	E-01-758	Heating and A/C Wiring Lounge 3100-3105
21	E-01-863	Heating and A/C Wiring Lounge 3106-3112
22	E-01-759	Heating and A/C Wiring Coach 4600-4626
23	E-01-864	Heating and A/C Wiring Coach 4700-4739
24	E-01-754	Heating and A/C Wiring Diner 8500-8504
25	E-01-865	Heating and A/C Wiring Diner 8505-8510
26	E-01-700	Schematic Diagram A/C Control
27	D-01-750	Schematic Antifreeze - Water Protection
28	E-04-760	Antifreeze - Water Protection Installation
29	E-04-546	Antifreeze - Water Protection Installation
30	E-01-837	Lighting and Conv. Outlets Bag Dorm 1614-1617
31	E-01-724	Lighting and Conv. Outlets Slumbercoach 2050-2056
32	E-01-834	Lighting and Conv. Outlets Slumbercoach 2080-2097
33	E-01-1683	Lighting and Conv. Outlets 10/6 Sleeper HC 2430-2441
34	E-01-725	Lighting and Conv. Outlets 10/6 Sleeper 2880-2894
35	E-01-726	Lighting and Conv. Outlets Lounge 3100-3105
36	E-01-835	Lighting and Conv. Outlets Lounge 3106-3112
37	E-01-1685	Lighting and Conv. Outlets Coach 4000-4014

For single diagram copies contact:
Operation and Maintenance Department
National Railroad Passenger Corporation
400 North Capitol St., N.W.
Washington, D.C. 20001
202/733-2694

*For additional copies of this collection of schematics contact:
Supervisor Support Systems, Amtrak Technical Training Center
202 Garstang Street, Beech Grove, Indiana 46107
317/263-0465

ELECTRICAL SCHEMATICS HERITAGE FLEET

SERIES 1126-9411

Amtrak

	DRAWING NO.	TITLES/DESCRIPTION
38	E-01-706	Lighting and Conv. Outlet Coach 4600-4648
39	E-01-836	Lighting and Conv. Outlet Coach 4700-4739,
40	E-01-727	Lighting and Conv. Outlet Diner 8500-8508
41	E-01-1687	Lighting and Conv. Outlet Diner 8511-8530
42	E-01-526	Communication Trainline Schematic Sleeper, Coach and Bag Dorm 2880-2883, 4600-4626, 8600-8603
43	E-01-602	Communication Trainline Schematic
44	D-04-775	Public Address Wiring Diagram Bag Dorm and Sleeper
45	D-04-744	Public Address Wiring Diagram Lounge 3100-3127
46	D-04-737	Public Address Wiring Diagram Coach 4600-4650
47	D-04-774	Public Address Wiring Diagram Diner 8500-8530
48	D-01-524	Main Power Distribution 480V 3-Phase 60 HZ Schematic
49	D-01-717	Single Line Power Schematic Bag Dorm 1610-1613
50	D-01-880	Single Line Power Schematic Bag Dorm 1614-1617
51	D-01-718	Single Line Power Schematic Slumber Coach and Sleeper 2050-2056
52	D-01-719	Single Line Power Sleeper Cars 2880-2894
53	D-01-720	Single Line Power Lounge 3100-3105
54	D-01-521	Single Line Power Coach 4600-4650
55	D-01-721	Single Line Power Diner Car 8500-8530
56	D-01-7099	Lighting Schematic Dome Coach 9400-9408
57	D-01-7100	Lighting Schematic Buffet 8700-8704

	DRAWING NO.	TITLES/DESCRIPTION
58	D-04-751	AC and DC Power Supply Wiring 120V AC & 64V DC
59	D-01-7119	Knife Battery Charger
60	C-01-7118	McGraw Edison Battery Charger
61	D-00-539-1,2	Auxiliary Panel
62	R-04-761	Wiring Schematic Bag Dorm 1614-1617
63	R-04-763	Wiring Schematic Sleeper 2880-2883
64	E-04-657	Overhead Conduit and Wiring Coach 4600-4626
65	D-01-527-1,2	E-5 Decelostat Controller System
66	C-01-715	Gaylord Ventilator Control Diner 8500-8530
67	E-01-822	Schematic Wiring Load Data Lounge 3100-3111
68	E-01-821	Schematic Wiring Load Kitchen 8500-8508
69	D-5861	Buffet Car Electrical Schematic 8700-8704
70	D-01-538	System Schematic Diagram Food Service Power Diner
71	D-01-793	Refrigeration Schematic Evaporator Diner
72	D-01-794	Refrigeration Equipment Schematic Compressor/Condenser
73	D-01-1660	Refrigeration Equipment Schematic Compressor/Condenser
74	D-01-795	Refrigeration Schematic Evaporators Lounge
75	D-01-796	Refrigeration Equipment Schematic Compressor/Condenser
76	E-01-6139	Refrigeration Electrical Schematic 10001
77	300-901	TIA Oven Model 1536-5C 3100-3111

ELECTRICAL SCHEMATICS HERITAGE FLEET

SERIES 1126-9411

Amtrak®

	DRAWING NO.	TITLES/DESCRIPTION
78	----------	Market Forge Convection Oven
79	AM-ES-12	Hobart Dishwasher Diner
80	D-01-673	Water Cooler Schematics
81	D-04-752	Wiring Diagram Water Heaters
82	C-04-669	Toilet Flush Wiring Schematics
83	E-04-916	Electric Locker Wiring Baggage Car - All Except 1300 Series
84	D-01-565	Temperature Control Schematic Baggage Car
85	D-01-716	Single Line Schematic Baggage Car 1126-1132, 1137-1138, 1140-1169, 1203-1272, 1175-1198
86	D-01-1710	Single Line Schematic Baggage Car 1128-1131, 1133-1136, 1139, 1170-1177
87	D-04-745	Public Address Wiring Diagram Baggage Cars, Bag Dorm
88	E-04-913	Electric Locker Wiring 1350-1379
89	E-01-911	Communication and Trainline Schematic 1350-1379
90	D-04-458	Communication and Trainline Schematic 1126-1177, 1203-1272
91	D-01-912	Single Line Power Schematic Baggage Car 1350-1379
92	D-01-915	Temperature Control Schematic Baggage Car 1350-1379
93	D-04-440	Sheet 1 of 14 Schematic Ledger and Car Number Tabulation
94	D-04-440	Sheet 2 of 14 Single Line Power Schematic 2900-2941
95	D-04-440	Sheet 3 of 14 Single Line Power Schematic 2980-2997
96	D-04-440	Sheet 4 of 14 480V Main Trainline Power Schematic
97	D-04-440	Sheet 5 of 14 Water System and Antifreeze Schematic
98	D-04-440	Sheet 6 of 14 Schematic Wiring A/C and Heating 2900-2997
99	D-04-440	Sheet 7 of 14 Floor Heat Schematic 2900-2941
100	D-04-440	Sheet 8 of 14 Floor Heat Schematic 2980-2997
101	D-04-440	Sheet 9 of 14 Auxiliary Circuits 2900-2941
102	D-04-440	Sheet 10 of 14 Auxiliary Circuits 2980-2997
103	D-04-440	Sheet 11 of 14 Lighting Schematic 2900-2941
104	D-04-440	Sheet 12 of 14 Lighting Schematic 2980-2997
105	D-04-440	Sheet 13 of 14 DC Systems Schematics
106	D-04-440	Sheet 14 of 14 Trainline Communications Schematics
107	D-01-473	Temperature Control Panel Sleeper 2900-2941, 2980-2997
108	E-00-474-1,2	Temperature Control Panel Sleeper 2900

DRAWING NUMBER D-04-414 REV D

BATTERY

AC VOLTAGE SOURCE

CURRENT SOURCE

AMMETER

VOLTMETER

INTERSECTION OF 2 WIRES NO CONNECTION

CONNECTION OF 2 WIRES

6.3A LINE AMPERES

PIN SOCKET DISCONNECT OR SOCKET CONNECTION

CONVENIENCE RECEPTACLE & PLUG

MINIATURE TWIST LOCK RECEPTACLE & PLUG

RECEPT PLUG TWIST LOCK RECEPTACLE & PLUG

HEATING CONTACTOR PANEL TERMINAL BLOCK TERMINAL

A/C STARTER PANEL TERMINAL BLOCK TERMINAL

TEMPERATURE CONTROL TERMINAL BLOCK TERMINAL

THERMOSTAT PLUG PIN

CONTROL PLUG PIN

PILOT LIGHT PLUG PIN

SPLICE

GENERAL TERMINAL BLOCK TERMINAL

N.C. N.O. SINGLE THROW SWITCH OR RELAY CONTACTS

DOUBLE THROW SWITCH OR RELAY CONTACTS

N.O. N.C. DOUBLE BREAK SWITCH OR RELAY CONTACTS FORM C

N.O. N.C. MECHANICALLY OPERATED (LIMIT) SWITCH FORM C

N.O. N.C. TIMING RELAY - DELAY FROM ENERGIZING FORM C

N.O. N.C. TIMING RELAY - DELAY FROM DEENERGIZING FORM C

5 SEC. SOLID STATE TIMER (INDICATE TIME & ACTION: eg CLOSES AFTER 5 SEC.)

N.O. N.C. FORM C PUSHBUTTON MAINTAINED

N.O. N.C. FORM C PULL SWITCH

ROTARY SWITCH (SELECTOR SWITCH)

LOCOMOTIVE CONTROL STAND SWITCH

AIR VANE SWITCH OPEN WITHOUT AIR FLOW

N.O. N.C. FLUID LEVEL SWITCH 2

N.O. N.C. PRESSURE SWITCH 1

OPENS ON TEMP. RISE CLOSES ON TEMP. RISE THERMOSTAT 6

THERMOSTAT ADJUSTABLE 6

WITH HEATER MERCURY THERMOSTAT (CLOSE ON RISE)

FUSE D

CIRCUIT BREAKER (THERMO MAGNATIC) D

CIRCUIT BREAKER (MAGNATIC ONLY) D

GROUND FAULT CIRCUIT BREAKER D

CONTACTOR CONTACTS

MOTOR OVERLOAD HEATER D

SOLENOID VALVE

SINGLE PHASE TRANSFORMER B

TRANSFORMER, 3-PHASE DELTA (Δ) CONNECTED B

TRANSFORMER, 3-PHASE WYE (Y) CONNECTED B

TRANSFORMER, 3-PHASE WYE CONNECTED WITH GROUNDED NEUTRAL B

CHOKE (IRON CORE)

CHOKE (AIR CORE) OR RELAY COIL

SATURABLE TRANSFORMER

CURRENT TRANSFORMER

FIELD (SERIES) ARMATURE FIELD SHUNT DC MOTOR OR GENERATOR C

3 PHASE AC MOTOR C

1 PHASE AC MOTOR C

SHIELDED WIRE SHIELD

BREAKOUT OF WIRES FROM BUNDLE

AC AC BRIDGE RECTIFIER

DIODE

SILICON CONTROLLED RECTIFIER (SCR)

ZENER DIODE

SILICON CONTROLLED SWITCH (SCS)

SUPPRESSION DIODE

VARISTOR

PNP NPN TRANSISTOR

PHOTO TRANSISTOR

FIELD EFFECT TRANSISTOR

UNIJUNCTION TRANSISTOR

OP AMP

INTEGRATED CIRCUIT, GENERAL TYPE

CRYSTAL

EARTH GROUND

CARBODY (CHASSIS)

CAPACITOR (NON-POLARIZED)

ELECTROLYTIC CAPACITOR

CAPACITOR, VARIABLE

SIGNAL LIGHT

LIGHT EMITTING DIODE (LED)

INCANDESCENT LAMP

FLUORESCENT LAMP BALLAST

INVERTER BALLAST

HEATER

RESISTOR

THERMISTOR

RESISTOR, VARIABLE

POTENTIOMETER

BELL

HORN OR SPEAKER

BUZZER

MICROPHONE

REVISIONS				
LTR	ZONE	DESCRIPTION	DATE	APP'D
A		REVISED	3/9/01	
B		REVISED & REDRAWN	3/13/03	RF BRUSS
C		ADDED SHIELDED WIRE & MICROPHN	3/25/03	RF BRUSS
D		REVISED	3/26/03	RF BRUSS

NOTES:

A. SWITCHES, RELAYS, CONTACTORS, ETC. ARE SHOWN IN THE FOLLOWING CONDITION UNLESS OTHERWISE NOTED:
1. PRESSURE SWITCHES: SYSTEM IN A PERFECT VACUUM
2. FLOAT SWITCHES: SYSTEM EMPTY
3. LIMIT, MICRO, AIR VANE, AND PUSHBUTTON SWITCHES: AT REST - NOTHING PRESSING AGAINST ACTIVATOR
4. KEY SWITCH: KEY REMOVED, OFF OR CLOSE POSITION, IF APPLICABLE
5. ROTARY & TOGGLE SWITCH: OFF POSITION
6. THERMOSTATS: AT ZERO DEGREES F.
7. RELAYS & CONTACTORS: WITH COIL NOT ENERGIZED
8. CURRENT SHOWN IN A BOX ALONG A WIRE IS THE FULL LOAD CURRENT.

B. GIVE VOLTAGES OF EACH WINDING, PLUS INDIVIDUAL TRANSFORMER RATING.
C. GIVE HP & RPM
D. GIVE TRIP VALUE.
E. GIVE VOLTAGE & AMP HOUR CAPACITY

MICROFILM RATIO 24X

QTY/CAR | USED ON

REFERENCE DRAWINGS:

EQUIPMENT ENGINEERING
Amtrak
National Railroad Passenger Corporation
400 N Capitol St., Washington, D.C. 20001

TITLE: ELECTRICAL & ELECTRONIC SYMBOLS

DR: OTEGLE APP'D: R.F. BRUSS APP'D: APP'D FOR ISSUE: 2-16-03
CHK: APP'D: APP'D:
SCALE: ~ DRAWING NO: D-04-414 REV: D
SH: 1 OF 1

1

24X
MICROFILM RATIO

EVAPORATOR COIL

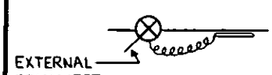

EXPANSION VALVE

FAN

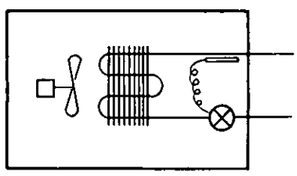

TYPICAL COMPLETE EVAPORATOR (REFRIGERATION)

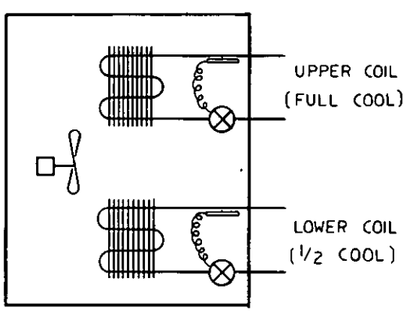

TYPICAL COMPLETE EVAPORATOR (A.C.)

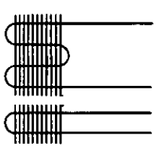

CONDENSER COIL

SUBCOOLER

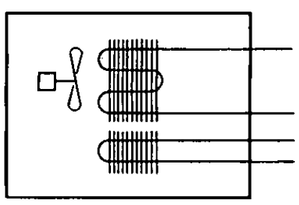

COMPLETE CONDENSOR ONE OR TWO FANS

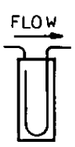

SUCTION ACCUMULATOR

SUCTION FILTER

VIBRATION ELIMINATOR

REDUCER (PIPE SIZE)

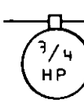

COMPRESSOR (REFRIGERATION)

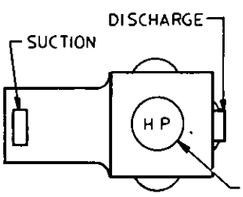

TYPICAL COMPRESSOR (A.C.)

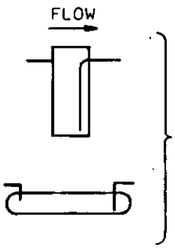

RECEIVERS

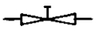

SHUT OFF VALVE

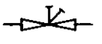

CHARGING VALVE

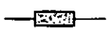

FILTER DRIER (REFRIGERATION)

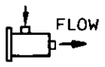

FILTER DRIER (A.C.)

STRANER

SIGHT GLASS/ MOISTURE INDICATOR

CHECK VALVE

HEAT EXCHANGER

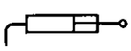

DAMPER OPPERATOR (FREON OPPERATED CYLINDER)

GAUGE

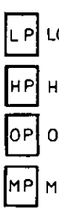

PRESSURE SWITCHES

CONDENSOR FAN

SERVICE SWITCH

DEFROST TIMER

THERMOSTAT

HEATER DEFROST DRAIN PAN OR CRANKCASE

3 WAY VALVE

DISCHARGE BYPASS VALVE

QTY/CAR	USED ON

REFERENCE DRAWINGS:

EQUIPMENT ENGINEERING

Amtrak

National Railroad Passenger Corporation
400 N Capitol St. Washington, D.C. 20001

DES.	DRAWN	TRACED	CHECKED	SCALE
				1 1/2"

TITLE: A/C & REFRIGERATION SYMBOLS

CONTRACT NO.	APPD:	APPD:
DRAWING NO. D-07-601		

WEIGHT NONE

SHEET 1 OF 1

ISSUED FOR BID

REVISIONS

ZONE	DESCRIPTION	DATE	APP'D
A C-2 A-B	ADDED SYMBOL ADDED NOTE	5/9/72	

THIS DRAWING IS THE PROPERTY OF AMTRAK AND IS LOANED SUBJECT TO RETURN ON DEMAND. IT IS NOT TO BE REPRODUCED OR COPIED IN WHOLE OR IN PART, AND ITS CONTENTS ARE NOT TO BE USED IN ANY MANNER FOR THE BENEFIT OF OTHERS WITHOUT THE WRITTEN CONSENT OF AMTRAK.

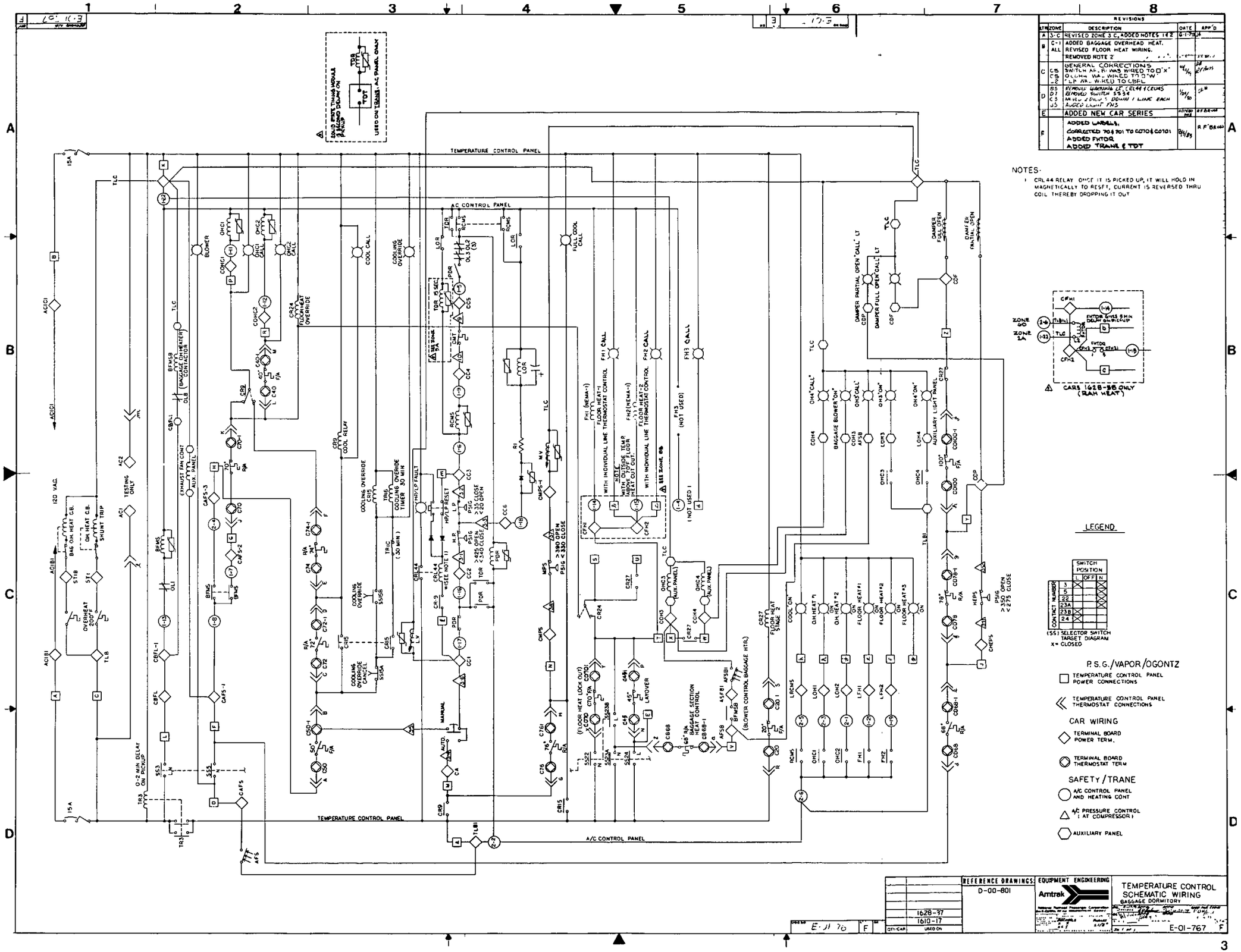

REVISIONS				
LTR	ZONE	DESCRIPTION	DATE	APP'D
A	3-C	REVISED ZONE 3 C, ADDED NOTES 1 & 2	6-1-75	
B	C-1 ALL	ADDED BAGGAGE OVERHEAD HEAT. REVISED FLOOR HEAT WIRING. REMOVED NOTE 2		
C	C5 C5 C2	GENERAL CORRECTIONS SWITCH AF, B1 WAS WIRED TO "X" O COHH WAS WIRED TO "W" LP WAS WIRED TO CBFL		
D	B3 D7 C3 J5	REMOVED WARNING LT. CRL44 & CRL45 REMOVED SWITCH SS34 MOVED 2 DIODES DOWN 1 LINE EACH ADDED LIGHT FH3	1/24/80	
E		ADDED NEW CAR SERIES		
F		ADDED LABELS. CORRECTED 70 & 701 TO CO70 & CO701 ADDED FHTOR ADDED TRANE & TDT	12/5/83	R F BRUNO

NOTES:

1. CRL44 RELAY ONCE IT IS PICKED UP, IT WILL HOLD IN MAGNETICALLY TO RESET, CURRENT IS REVERSED THRU COIL THEREBY DROPPING IT OUT

QTY/CAR	USED ON
	1628-37
	1610-17

REFERENCE DRAWINGS: D-00-801

EQUIPMENT ENGINEERING — Amtrak

TEMPERATURE CONTROL SCHEMATIC WIRING
BAGGAGE DORMITORY

E-01-767 F

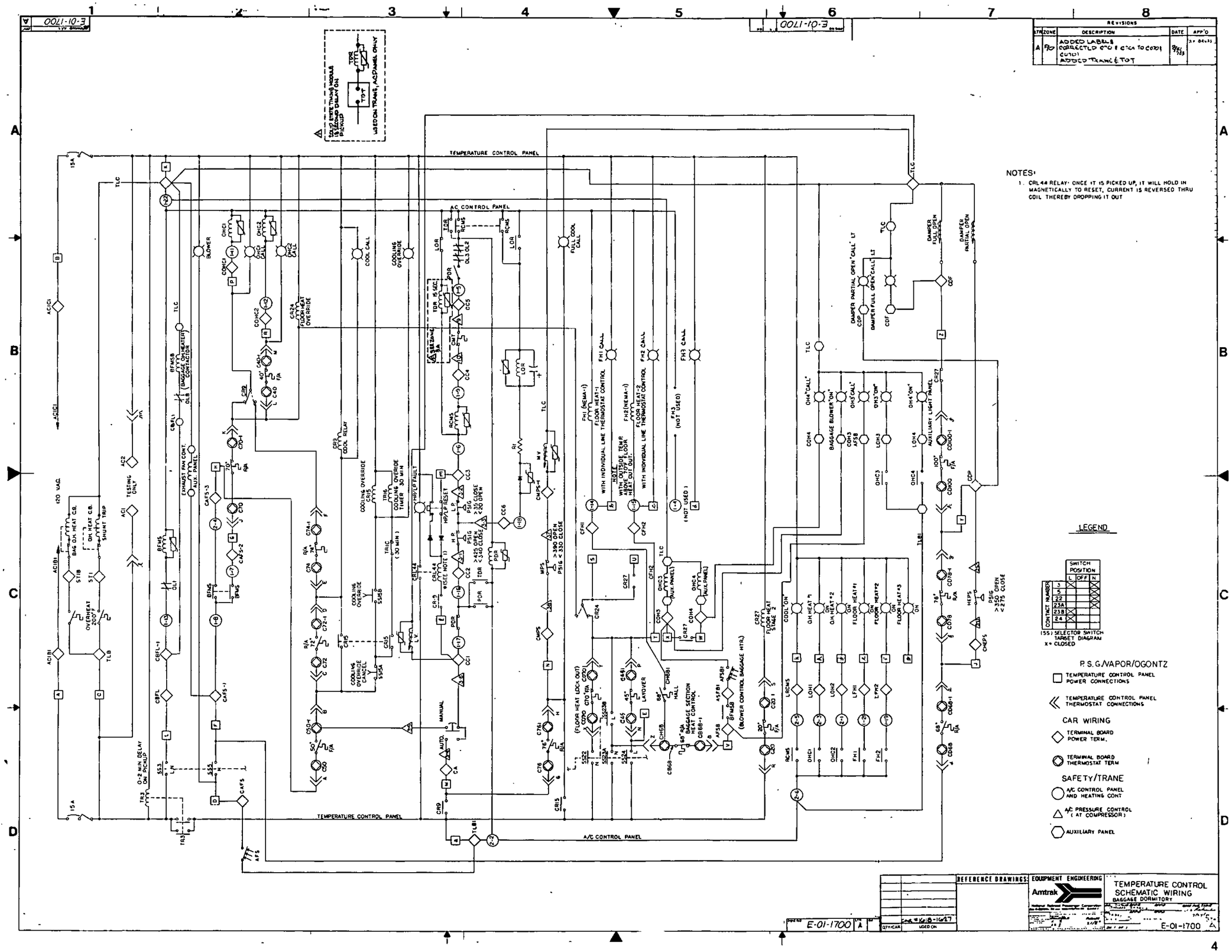

E-01-1700
REVISIONS
LTR ZONE DESCRIPTION DATE APP'D
A ADDED LABELS CORRECTED C70 & C70A TO C070 & C070A ADDED TRANE & TOT
NOTES:
1. CRL44 RELAY: ONCE IT IS PICKED UP, IT WILL HOLD IN MAGNETICALLY TO RESET, CURRENT IS REVERSED THRU COIL THEREBY DROPPING IT OUT
TEMPERATURE CONTROL PANEL
AC CONTROL PANEL
A/C CONTROL PANEL
LEGEND
SWITCH POSITION
L OFF N
CONTACT NUMBER
3
5
22
23A
23B
24
(SS) SELECTOR SWITCH TARGET DIAGRAM
X = CLOSED
P.S.G./VAPOR/OGONTZ
TEMPERATURE CONTROL PANEL POWER CONNECTIONS
TEMPERATURE CONTROL PANEL THERMOSTAT CONNECTIONS
CAR WIRING
TERMINAL BOARD POWER TERM.
TERMINAL BOARD THERMOSTAT TERM
SAFETY/TRANE
A/C CONTROL PANEL AND HEATING CONT
A/C PRESSURE CONTROL (AT COMPRESSOR)
AUXILIARY PANEL
REFERENCE DRAWINGS:
EQUIPMENT ENGINEERING
Amtrak
TEMPERATURE CONTROL SCHEMATIC WIRING
BAGGAGE DORMITORY
E-01-1700

REVISIONS				
LTR	ZONE	DESCRIPTION	DATE	APP'D
A	C-2 D-7 C-5	SWITCH AFS WAS BETWEEN CAFS-1 AND 1-A, CONNECTED S53 TO DISCONNECT 4, REMOVED S53A1, REVISED FLOOR HEAT CONTACTOR PANEL TRF-0049 REVISED ZONE C-3, ADDED NOTES 1 & 2	10/1/79	RF Gross
B	B-7 C-7	WIRE BETWEEN CDF-0 & CDF-0 WAS BETWEEN Z-0 & CDF-0 CDP-0 RELAY-0 & ADDED NEW 'V'	12/1/79 rev 3	RF Gross 1/4/79
C	B-5	REMOVED WARDING LT, CR144 & CR145	5/1/80	[illegible]
D		ADDED NEW CAR SERIES. DELETED NOTE 2	11/24/80 MB	C.F.M.-11
E		ADDED LABELS CORRECTED CR6 (C10) TO CDTD & CDTR ADDED FH7 DR ADDED TRANS & TDPT	3/16/83	R. Gross

NOTES:

1. CR144 RELAY: ONCE IT IS PICKED UP, IT WILL HOLD IN MAGNETICALLY TO RESET, CURRENT IS REVERSED THRU COIL THEREBY DROPPING IT OUT.

LEGEND

(5S) SELECTOR SWITCH TARSET DIAGRAM
x = CLOSED

CONTACT NUMBER	SWITCH POSITION L	OFF	N
3			
5			
22			
23A			
23B			
24			

P.S.G./VAPOR/OGONTZ

- TEMPERATURE CONTROL PANEL POWER CONNECTIONS
- TEMPERATURE CONTROL PANEL THERMOSTAT CONNECTIONS

CAR WIRING

- TERMINAL BOARD POWER TERM.
- TERMINAL BOARD THERMOSTAT TERM

SAFETY/TRANE

- A/C CONTROL PANEL AND HEATING CONT
- A/C PRESSURE CONTROL (AT COMPRESSOR)
- AUXILIARY PANEL

REFERENCE DRAWINGS	REFERENCE DRAWINGS	EQUIPMENT ENGINEERING
CAR = 2050-2053 = 2080-2088 = 2059-96 = 2089-95 = 2096-97		Amtrak

TEMPERATURE CONTROL SCHEMATIC WIRING SLUMBER COACH CARS

E-01-771 E

OLL-10-3

OLL-10-3

REVISIONS				
LTR	ZONE	DESCRIPTION	DATE	APP'D
A	C-6	REMOVED 3-4 FROM SELECTOR SWITCH TARGET DIAGRAM SWITCH AFS WAS BETWEEN CAFS-4 AND 1-B, CONNECTED 885 TO DISCONNECT 4, REMOVED 1534, REMOVED CONNECTION TO A/C CONTROL PANEL 1-A REVISED FLOOR HEAT CONTACTOR TBS 3-24-72	4/24/72	SA
	C-2			
	C-3	REVISED ZONE 3-C, ADDED NOTES 1&2		
B	D-7	WIRE BETWEEN CDF"O & CDF"O WAS BETWEEN CDF"O & "Z"D.	10/12/72	GF (Amtrak)
	C-6	CDF"O WAS "Y"D, ADDED NEW "Y"O.		
	C-7	2-G WAS 2-9C REMOVED FH 3 (NOT USED)		
C	B-5	REMOVED WIRING TO LT, CR44 & CR45, ADDED FH3 LIGHT	12/4/72	- " -
D		ADDED NEW CAR SERIES.	7/30/73	GF (Amtrak)
E		ADDED NEW CAR SERIES.	8/30/73	GF (Amtrak)
F		ADDED LABELS CORRECTED C70 & C0701 TO C0706 C0701 ADDED FMTDR ADDED TRANS. TDT	9/10/73	R DEVAS

NOTES:

1. CR144 RELAY: ONCE IT IS PICKED UP, IT WILL HOLD IN MAGNETICALLY TO RESET, CURRENT IS REVERSED THRU COIL THEREBY DROPPING IT OUT.
2. EMERGENCY SWITCH - NOT APPLICABLE ON ALL CARS.

LEGEND

CONTACT NUMBER	SWITCH POSITION L	OFF	N
3		X	
5			X
22	X		
23A			X
23B	X		
24			X

(SS1) SELECTOR SWITCH TARGET DIAGRAM
X = CLOSED

P.S.G./VAPOR/OGONTZ

- TEMPERATURE CONTROL PANEL POWER CONNECTIONS
- TEMPERATURE CONTROL PANEL THERMOSTAT CONNECTIONS

CAR WIRING

- TERMINAL BOARD POWER TERM.
- TERMINAL BOARD THERMOSTAT TERM

SAFETY / TRANE

- A/C CONTROL PANEL AND HEATING CONT
- A/C PRESSURE CONTROL (AT COMPRESSOR)
- AUXILIARY PANEL

CARS EQUIPPED WITH RAM HEAT ONLY

FMTDR GIVES 5 MINUTE DELAY ON PICKUP

REFERENCE DRAWINGS:	EQUIPMENT ENGINEERING	
D-00-803	Amtrak	TEMPERATURE CONTROL SCHEMATIC WIRING SLEEPER CARS
2871-96		
2430-82		
CITY/CAR: USED ON		E-01-770 F

E-01-770 F

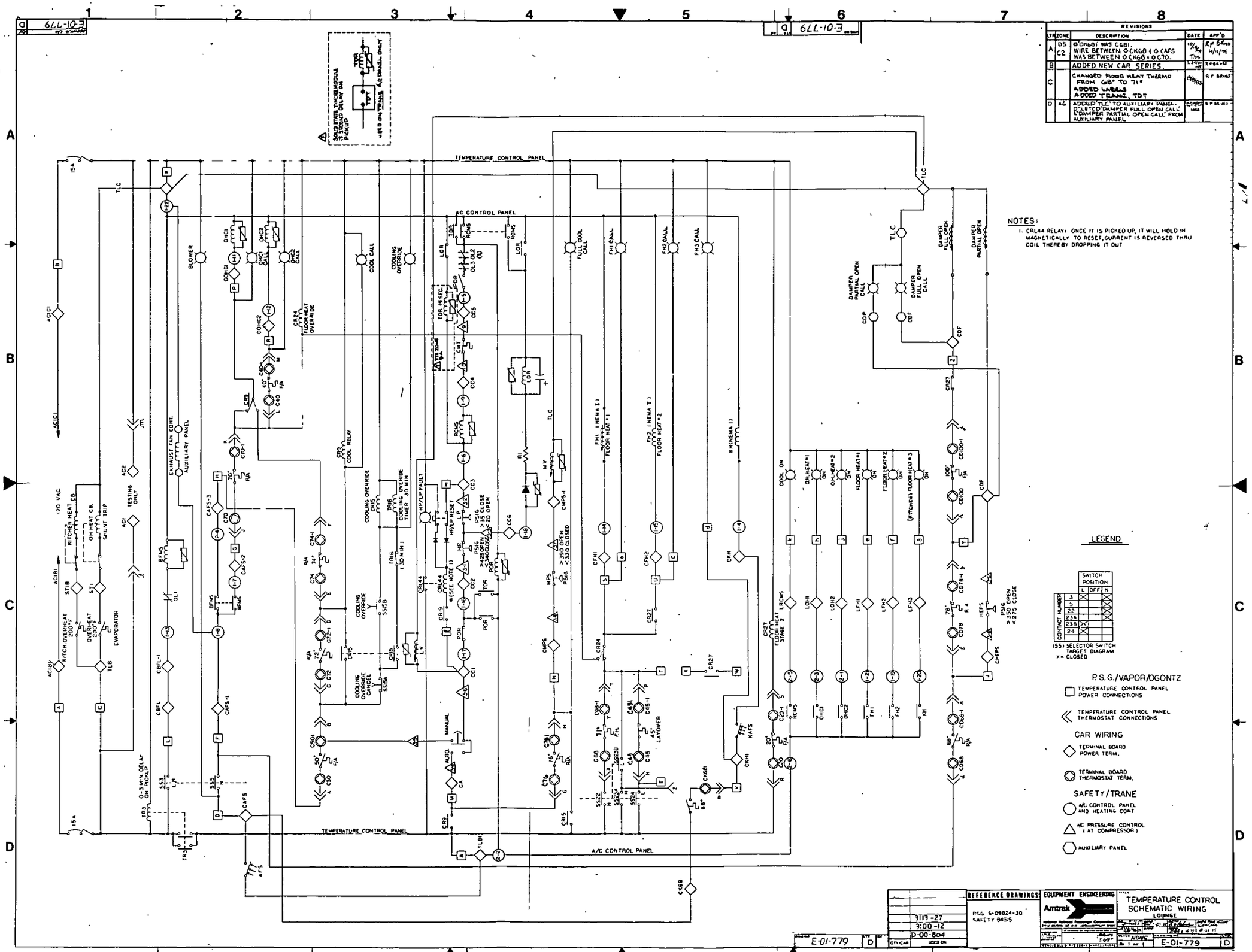

NOTES:

1. CRL44 RELAY: ONCE IT IS PICKED UP, IT WILL HOLD IN MAGNETICALLY TO RESET, CURRENT IS REVERSED THRU COIL THEREBY DROPPING IT OUT

LEGEND

CONTACT NUMBER	SWITCH POSITION L	OFF	N
3	X		X
5			X
22			X
23A			X
23B	X		
24	X		

(55) SELECTOR SWITCH TARGET DIAGRAM
X = CLOSED

P.S.G./VAPOR/OGONTZ

- TEMPERATURE CONTROL PANEL POWER CONNECTIONS
- TEMPERATURE CONTROL PANEL THERMOSTAT CONNECTIONS

CAR WIRING

- TERMINAL BOARD POWER TERM.
- TERMINAL BOARD THERMOSTAT TERM.

SAFETY/TRANE

- A/C CONTROL PANEL AND HEATING CONT
- A/C PRESSURE CONTROL (AT COMPRESSOR)
- AUXILIARY PANEL

REVISIONS

LTR	ZONE	DESCRIPTION	DATE	APP'D
A	D5 C2	O'CK681 WAS C681. WIRE BETWEEN O CK68 & O CAFS WAS BETWEEN O CK68 & O C70.	10/1/79	R.F. Bruns 10/11/79
B		ADDED NEW CAR SERIES.	7-24-80	R.F. BRUNS
C		CHANGED FLOOR HEAT THERMO FROM 68° TO 71° ADDED LABELS ADDED TRANE, TDT	8/8/83	R.F. BRUNS
D	A6	ADDED "TLC" TO AUXILIARY PANEL. DELETED "DAMPER FULL OPEN CALL" & "DAMPER PARTIAL OPEN CALL" FROM AUXILIARY PANEL	8-29-85	R.F. BRUNS

REFERENCE DRAWINGS: P.S.G. S-09824-30 SAFETY 84515

EQUIPMENT ENGINEERING — Amtrak

TITLE: TEMPERATURE CONTROL SCHEMATIC WIRING LOUNGE

3113-27	
3100-12	
D-00-804	
CTY/CAR	LOCO ON

E-01-779 D

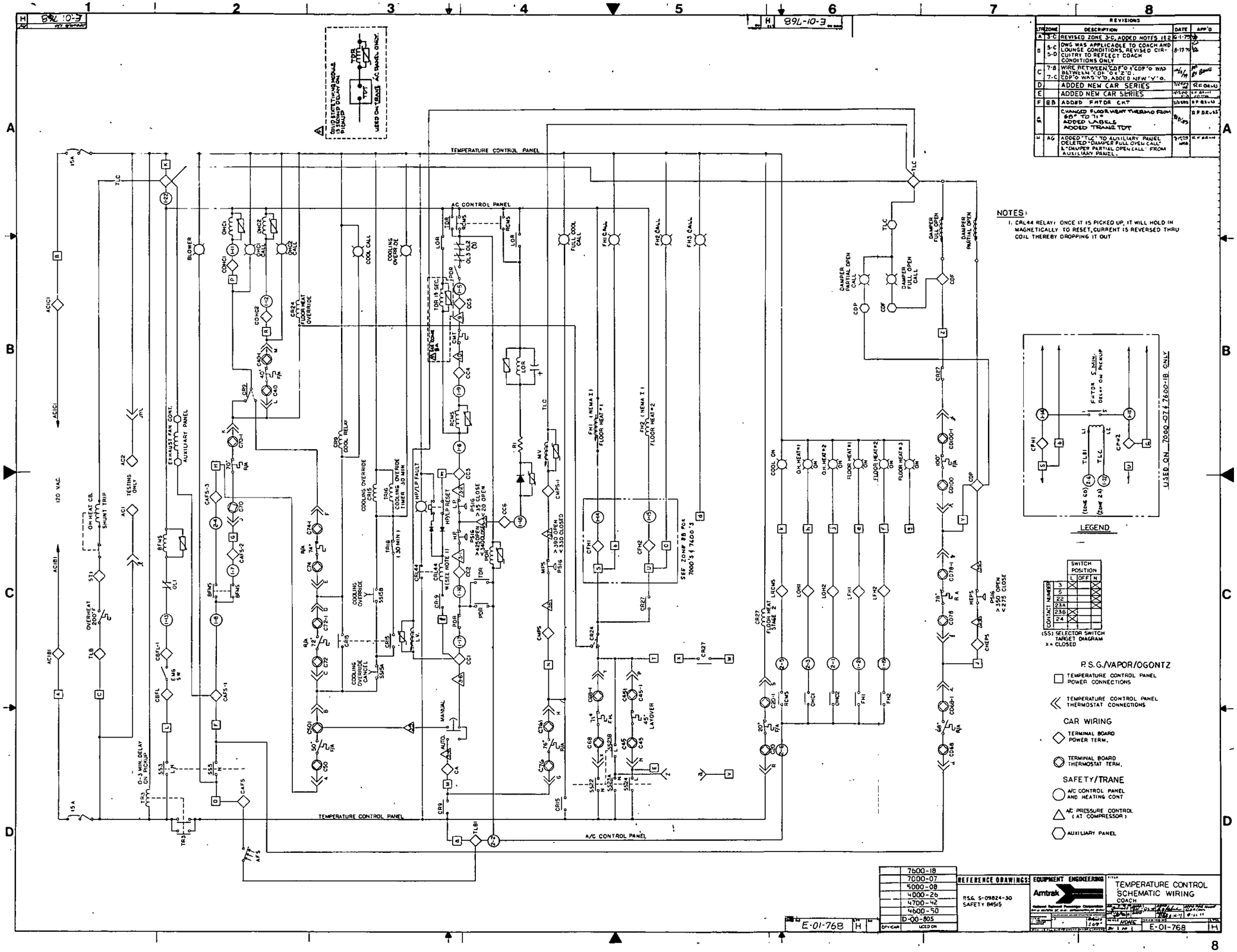

NOTES:

1. CRL44 RELAY: ONCE IT IS PICKED UP, IT WILL HOLD IN MAGNETICALLY TO RESET, CURRENT IS REVERSED THRU COIL THEREBY DROPPING IT OUT

REVISIONS

LTR	ZONE	DESCRIPTION	DATE	APP'D
A	3-C	REVISED ZONE 3-C, ADDED NOTES 1 & 2	6-1-79	
B	5-C 5-D	DWG WAS APPLICABLE TO COACH AND LOUNGE CONDITIONS. REVISED CIRCUITRY TO REFLECT COACH CONDITIONS ONLY	8-17-79	
C	7-B 7-C	WIRE BETWEEN "CDF"O & "CDP"O WAS BETWEEN "CDF"O & "Z"O. "CDP"O WAS "Y"O, ADDED NEW "Y"O.		
D		ADDED NEW CAR SERIES		RF BRUSS
E		ADDED NEW CAR SERIES		
F	8B	ADDED FHTDR CKT		RF BRUSS
G		CHANGED FLOOR HEAT THERMO FROM 68° TO 71° ADDED LABELS ADDED TRANS TDT		RF BRUSS
H	AG	ADDED "TLC" TO AUXILIARY PANEL DELETED "DAMPER FULL OPEN CALL" & "DAMPER PARTIAL OPEN CALL" FROM AUXILIARY PANEL.		RF BRUSS

	7600-18
	7000-07
	5000-08
	4000-26
	4700-42
	4600-50
	D-00-805
QTY/CAR	USED ON

REFERENCE DRAWINGS: P.S.G. S-09824-30 SAFETY 84515

EQUIPMENT ENGINEERING — Amtrak

TITLE: TEMPERATURE CONTROL SCHEMATIC WIRING COACH

SCALE: NONE — E-01-768 — H

E-01-768 H

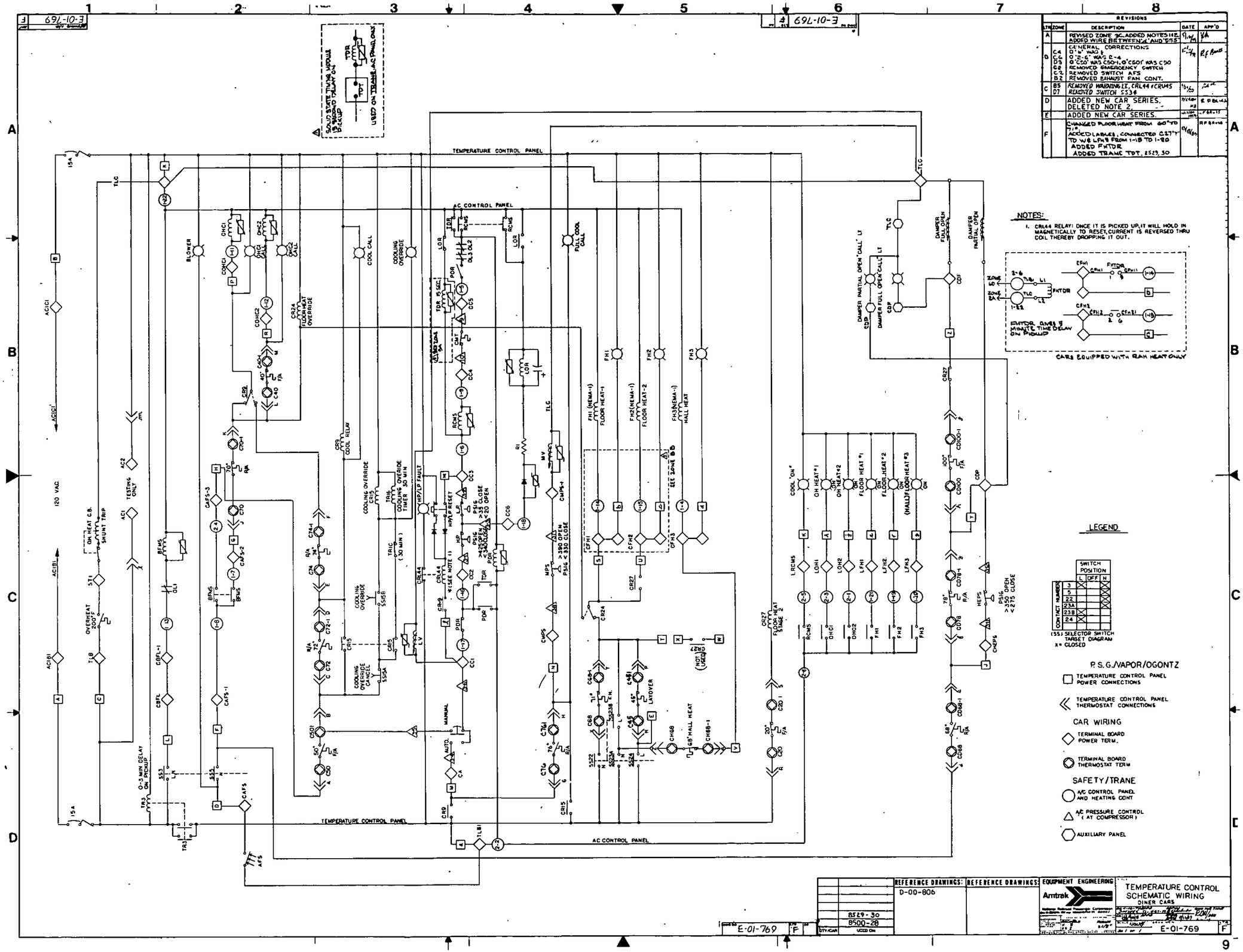

REVISIONS				
LTR	ZONE	DESCRIPTION	DATE	APP'D
A		REVISED ZONE 3C, ADDED NOTES 1&2, ADDED WIRE BETWEEN 'A' AND 'B'		
B	C4, C6, D3, G2, C2, B2	GENERAL CORRECTIONS: 0'-6" WAS 8; 0'-2-6" WAS 2-4; 0'C50' WAS C50-1, 0'C60' WAS C50; REMOVED EMERGENCY SWITCH; REMOVED SWITCH AFS; REMOVED EXHAUST FAN CONT.		
C	B5, D7	REMOVED WARNING LT, CRL44 & CRU45; REMOVED SWITCH SS34		
D		ADDED NEW CAR SERIES. DELETED NOTE 2.		
E		ADDED NEW CAR SERIES.		
F		CHANGED FLOOR HEAT FROM 60° TO 71°; ADDED LABLES, CONNECTED C27'Y' TO W & LFH3 FROM 1-18 TO 1-80; ADDED FHTDR; ADDED TRANE TDT, 8529, 30		

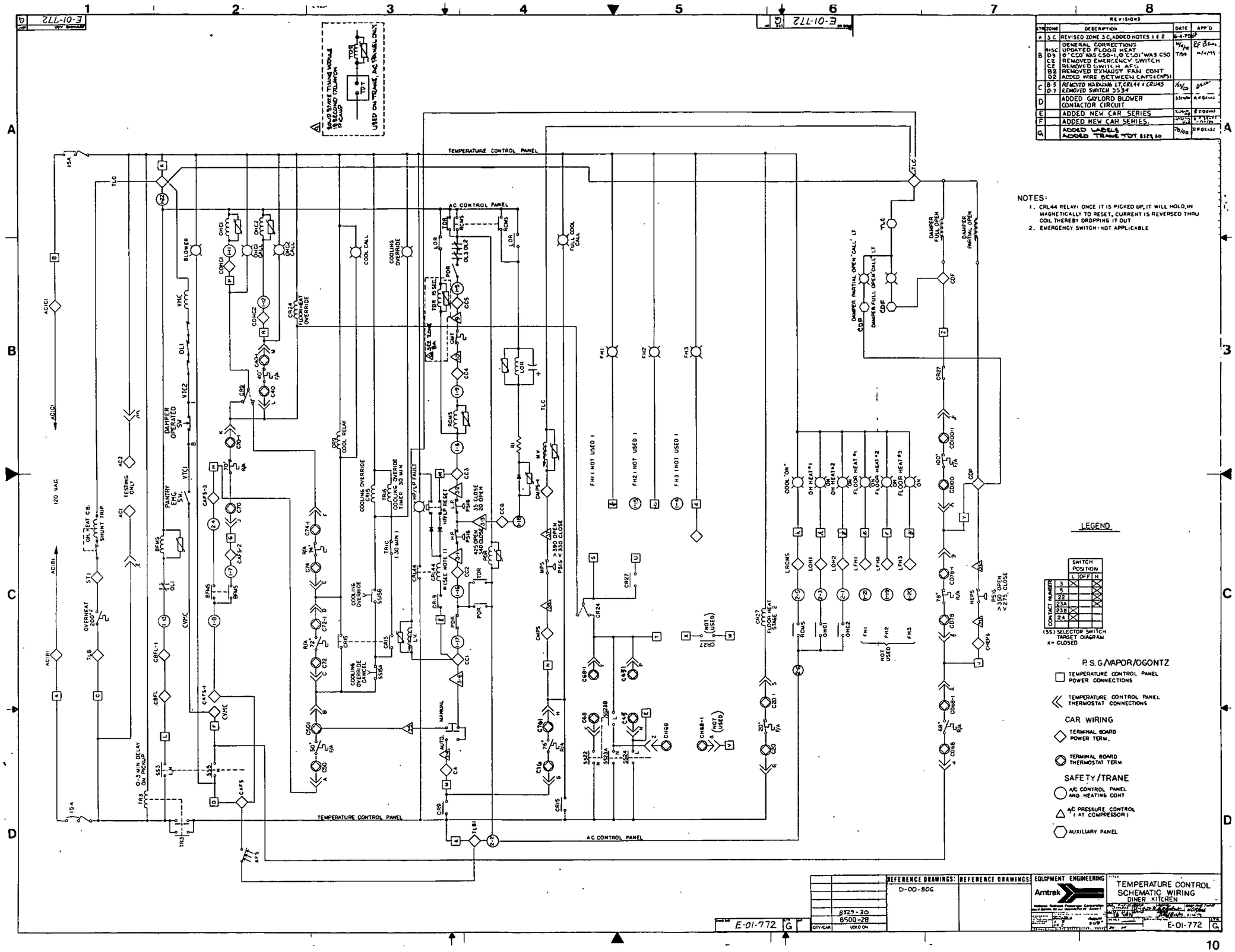

REVISIONS				
STR	ZONE	DESCRIPTION	DATE	APP'D
A	3 C	REVISED ZONE 3 C, ADDED NOTES 1 & 2	6-4-79	
B	4+5C D3 C2 C2 B2 D2	GENERAL CORRECTIONS UPDATED FLOOR HEAT 0 "C50" WAS C50-1, 0 "C501" WAS C50 REMOVED EMERGENCY SWITCH REMOVED SWITCH AFG REMOVED EXHAUST FAN CONT ADDED WIRE BETWEEN CAFS1 & CAFS1	10/4/79 T/99	RF Brass 10/4/79
C	B-5 D-7	REMOVED WARNING LT, CRL44 & CRL45 REMOVED SWITCH 3534	7/19/80	
D		ADDED GAYLORD BLOWER CONTACTOR CIRCUIT	3/20/80	RF Brass
E		ADDED NEW CAR SERIES	7/20/80	RF Brass
F		ADDED NEW CAR SERIES.	7/20/80	RF Brass
G		ADDED LABELS ADDED TRANE TDT 8529,30	7/8/80	RF Brass

NOTES:

1. CRL44 RELAY: ONCE IT IS PICKED UP, IT WILL HOLD, IN MAGNETICALLY TO RESET, CURRENT IS REVERSED THRU COIL THEREBY DROPPING IT OUT
2. EMERGENCY SWITCH - NOT APPLICABLE

LEGEND

CONTACT NUMBER	SWITCH POSITION L	OFF	N
3	X		X
5			X
22			X
23A			X
23B	X		
24	X		

(SS) SELECTOR SWITCH TARGET DIAGRAM
X = CLOSED

P.S.G./VAPOR/OGONTZ

- TEMPERATURE CONTROL PANEL POWER CONNECTIONS
- TEMPERATURE CONTROL PANEL THERMOSTAT CONNECTIONS

CAR WIRING

- TERMINAL BOARD POWER TERM.
- TERMINAL BOARD THERMOSTAT TERM

SAFETY/TRANE

- A/C CONTROL PANEL AND HEATING CONT
- A/C PRESSURE CONTROL (AT COMPRESSOR)
- AUXILLARY PANEL

QTY/CAR	USED ON
	8529-30
	8500-28

REFERENCE DRAWINGS: D-00-806

REFERENCE DRAWINGS:

EQUIPMENT ENGINEERING
Amtrak

TEMPERATURE CONTROL SCHEMATIC WIRING
DINER KITCHEN

E-01-772 G

E-01-7049

REVISIONS				
LTR	ZONE	DESCRIPTION	DATE	APPRVD

LOWER LEVEL

DOME

120 VAC

ACIBI ACICI

15 A

TLB TLBDI TLDBI

ST1 STD1

OVERHEAT 200° F

OVERHEAT DOME 200° F

SHUNT TRIP LOWER LEVEL

SHUNT TRIP DOME

TLC TLDC

AC1 ADC1 ADC2

TR3 TDR3

0-3 MIN. DELAY PICK-UP

SS3 SS5 LN

CBFL CDBFL

EMG. SW.

CBFL1 CDBFL1

OLI BFM

OLI BFM DOME

BFMS BFMS DOME

BLOWER EXHAUST FAN

BLOWER DOME

CAFS CDAFS

AFS AFS DOME

CAFS1 CAFS2 CAFS3 CDAFS1 CDAFS2 CDAFS3

BFMS BFMS DOME

C70 70° RA C701 CD70 CD701

CR9

OHC1 OHC2 OHC1 DOME OHC2 DOME

C50 C501 CD50 CD501

50° FA

C72 C721 CD72 CD721

72° RA

C40 C401 CD40 CD401

40° FA

C74 C741 CD74 CD741

74° RA

OHC1 CALL OHC2 CALL

CR24 FLOOR HEAT OVERRIDE

CR9 COOL RELAY

COOL CALL

CR15 COOL OVERRIDE

SS15A COOL OVERRIDE CANCEL

CR15 SS15B COOL OVERRIDE

(30 MIN) TR16

TRIG. COOL OVERRIDE 30 MIN PICK-UP

CA CDA

MANUAL OFF AUTO

C501 CD501

CC1 CDC1

PDR TDR LOR

CM CH TLC1 TLC2 TLC3 TLC4 TLC5

OL1 OL2 OL3

CC2 CC3 CC4 CC5 CC6 CC7 CDC2 CDC3 CDC4 CDC5 CDC6 CDC7

HP LP

RCMS RCMS DOME

CMT

TDR 10 SEC. PICK-UP TDDR 10 SEC PICK UP

LIQUID VALVE

HP/LP RESET

CR144 CRL44

SEE NOTE 1

C76 76° RA C761 CD76 CD761

CMPS CDMPS

MPS

HP/LP FAULT MOD VALVE

HP/LP FAULT DOME MOD VALVE DOME

FULL COOL CALL

FULL COOL CALL DOME

SS22 SS23A SS24 SS23B

CR15 C68 C681 CD68 CD681

71° F.H. DOME

CR24 CR27

CFH1 CFH2 CFH3 CDFH1 CDFH2

C45 C451 CD45 CD451

45° LAYOVER DOME

CT68 C681 68° TOILET

FLOOR HEAT #1 FLOOR HEAT #2 TOILET HEAT FH #3 CALL

C20 C201 CD20 CD201

20° FA

CR27 STAGE 2

CD68 CD681 CD78 CD781

68° RA 78° RA

HEPS CDHEPS

RCMS OHC1 OHC2 FH1 FH2 FH3

LRCMS LOH1 LOH2 LFH1 LFH2 LFH3

RCMS DOME OHC1 DOME OHC2 DOME FH1 DOME FH2 DOME FH3 DOME

LDRCMS LDOH1 LDOH2 LDFH1 LDFH2

COOL ON

OH HEAT ON #1 OH HEAT ON #2 FLOOR HEAT #1 ON FLOOR HEAT #2 ON FLOOR HEAT #3 ON

DAMPER PARTIAL OPEN CALL DAMPER FULL OPEN CALL

CDP CDF

CD100 CD1001

100° FA

DAMPER FULL OPEN DAMPER FULL DOME

NOTE:
1) CRL44 RELAY LATCHING RELAY

* PRESSURE SWITCH VALUES

	OPEN	CLOSE
HP	>425	<340
LP	<20	>35
MPS	>390	<330
HEPS	>350	<275

CONTACT NUMBER	POSITION L	OFF	IN
3	X		
5			X
22			X
23A			X
23B	X		
24	X		

KEY:

- □ — TEMP. CONTROL PANEL POWER CONNECTIONS
- ≪ — TEMP. CONTROL PANEL THERMOSTAT CONNECTIONS
- ◇ — TERM. BOARD POWER TERMINAL
- ⬡ — TERM. BOARD THERMOSTAT TERM.
- △ — A/C PRESSURE CONTROL (AT COMP.)
- ⬡ — AUXILIARY PANEL
- ○○ — 480 V PANEL PLUG

MICROFILM RATIO 30 X

QTY	PART NUMBER	DESCRIPTION	MATERIAL	MFG/SPEC	P/L ITEM NO	ITEM
		LIST OF MATERIAL				

REFERENCE DRAWINGS
9407-11
9400-06
QTY/CAR USED ON
DO NOT SCALE DRAWING

EQUIPMENT ENGINEERING
Amtrak

TITLE: TEMPERATURE CONTROL SCHEMATIC (H.E.P VISTADOME)

DRAWING NO. E-01-7049

SHEET 1 of 1

11

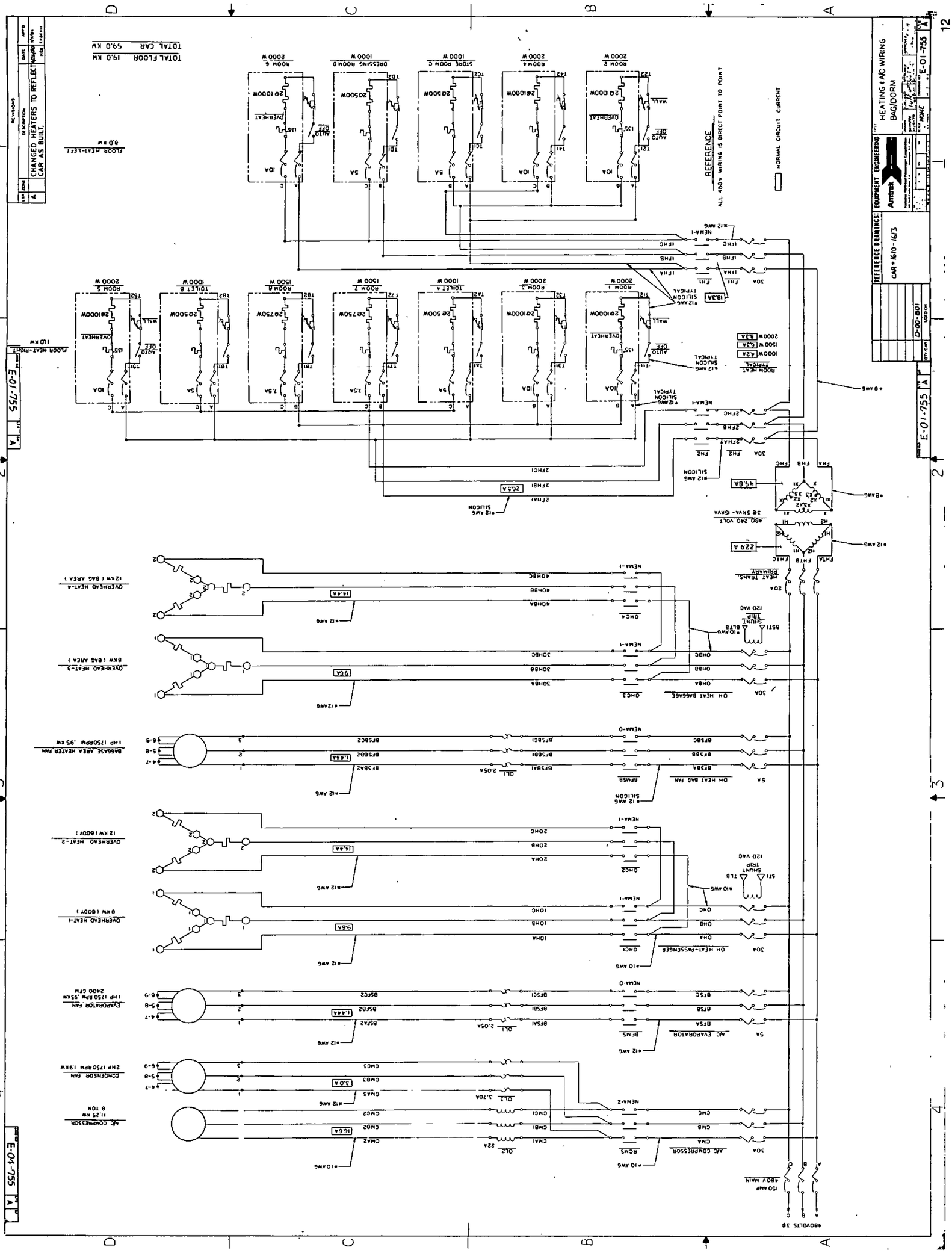
HEATING & AC WIRING
BAG/DORM
E-01-755
REFERENCE DRAWINGS:
CAR # 1610 - 1613
E-01-755
E-04-755
REFERENCE
ALL 480V WIRING IS DIRECT POINT TO POINT
NORMAL CIRCUIT CURRENT
CHANGED HEATERS TO REFLECT CAR AS BUILT.
TOTAL CAR 59.0 KW
TOTAL FLOOR 19.0 KW
FLOOR HEAT-LEFT 8.0 KW
FLOOR HEAT-RIGHT 11.0 KW
ROOM 1 2000 W
ROOM 2 2000 W
ROOM 4 2000 W
STORE ROOM C 1000 W
DRESSING ROOM D 1000 W
ROOM 6 2000 W
ROOM 5 2000 W
TOILET B 1000 W
ROOM 8 1500 W
ROOM 7 1500 W
TOILET A 1000 W
ROOM 3 2000 W
OVERHEAD HEAT-1 8 KW (BODY)
OVERHEAD HEAT-2 12 KW (BODY)
OVERHEAD HEAT-3 8KW (BAG AREA)
OVERHEAD HEAT-4 12KW (BAG AREA)
BAGGAGE AREA HEATER FAN 1HP 1750RPM .95 KW
EVAPORATOR FAN 1HP 1750 RPM .95KW 2400 CFM
CONDENSOR FAN 2HP 1750RPM 1.9KW
A/C COMPRESSOR 11.25 KW 6 TON
480VOLTS 3Φ
480V MAIN
150 AMP
OH HEAT BAGGAGE
OH HEAT PASSENGER
OH HEAT BAG FAN
A/C EVAPORATOR
A/C COMPRESSOR
HEAT TRANS PRIMARY
SHUNT TRIP
120 VAC
ROOM HEAT
SILICON
TYPICAL

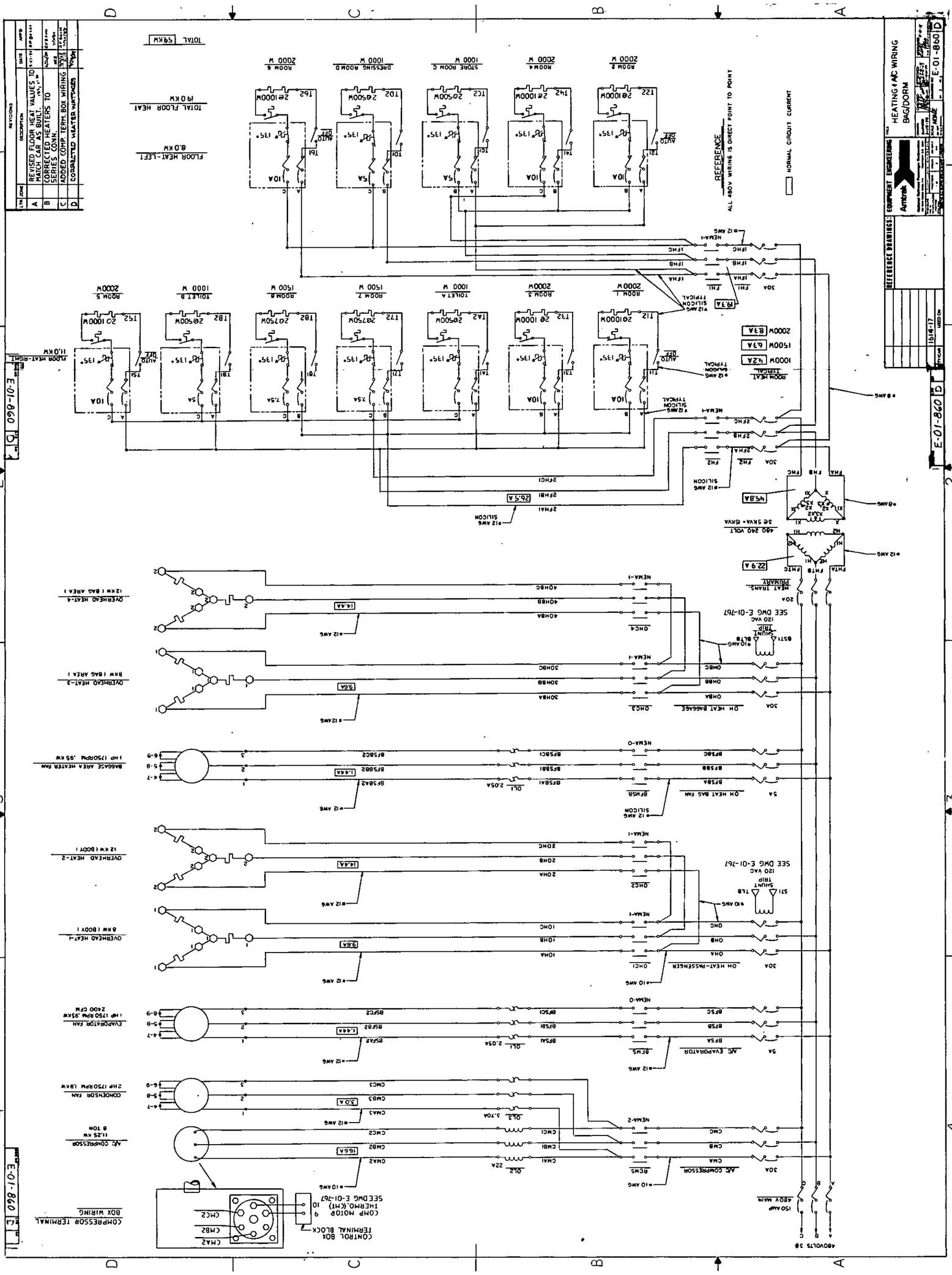
REVISIONS
ZONE
DESCRIPTION
DATE
APPD
A
REVISED FLOOR HEAT VALUES TO MATCH CAR AS BUILT.
B
CORRECTED HEATERS TO SERIES CONN.
C
ADDED COMP. TERM. BOX WIRING
D
CORRECTED HEATER WATTAGES
TOTAL 59KW
TOTAL FLOOR HEAT 19.0 KW
FLOOR HEAT-LEFT 8.0 KW
ROOM 6 2000 W
DRESSING ROOM D 1000 W
STORE ROOM C 1000 W
ROOM 4 2000 W
ROOM 2 2000 W
REFERENCE
ALL 480V WIRING IS DIRECT POINT TO POINT
NORMAL CIRCUIT CURRENT
ROOM 5 2000W
TOILET B 1000 W
ROOM 8 1500 W
ROOM 7 1500 W
TOILET A 1000 W
ROOM 3 2000W
ROOM 1 2000W
ROOM HEAT TYPICAL
2000W 8.3A
1500W 6.3A
1000W 4.2A
FLOOR HEAT-RIGHT 11.0 KW
480 240 VOLT 30 5KVA- 15KVA
HEAT TRANS. PRIMARY
SEE DWG E-01-767
OVERHEAD HEAT-4 12 KW (845 AREA)
OVERHEAD HEAT-3 8KW (845 AREA)
OVERHEAD HEAT-2 12 KW (BOOTH)
OVERHEAD HEAT-1 8 KW (BOOTH)
B460A2C AREA HEATER FAN 1 HP 1750RPM .95 KW
EVAPORATOR FAN 1 HP 1750 RPM .95KW 2400 CFM
CONDENSOR FAN 2HP 1750RPM 1.9KW
A/C COMPRESSOR 11.25 KW 8 TON
COMPRESSOR TERMINAL BOX WIRING
CONTROL BOX TERMINAL BLOCK
COMP MOTOR THERMO.(KM1) SEE DWG E-01-767
480VOLTS 3Φ
150 AMP
480V MAIN
OH HEAT B460A2E
OH HEAT BAG FAN
A/C EVAPORATOR
A/C COMPRESSOR
OH HEAT-PASSENGER
HEAT TRANS. PRIMARY
REFERENCE DRAWINGS:
EQUIPMENT ENGINEERING
Amtrak
HEATING & AC WIRING BAG/DORM
E-01-860
E-01-860
E-01-860
E-01-860
13

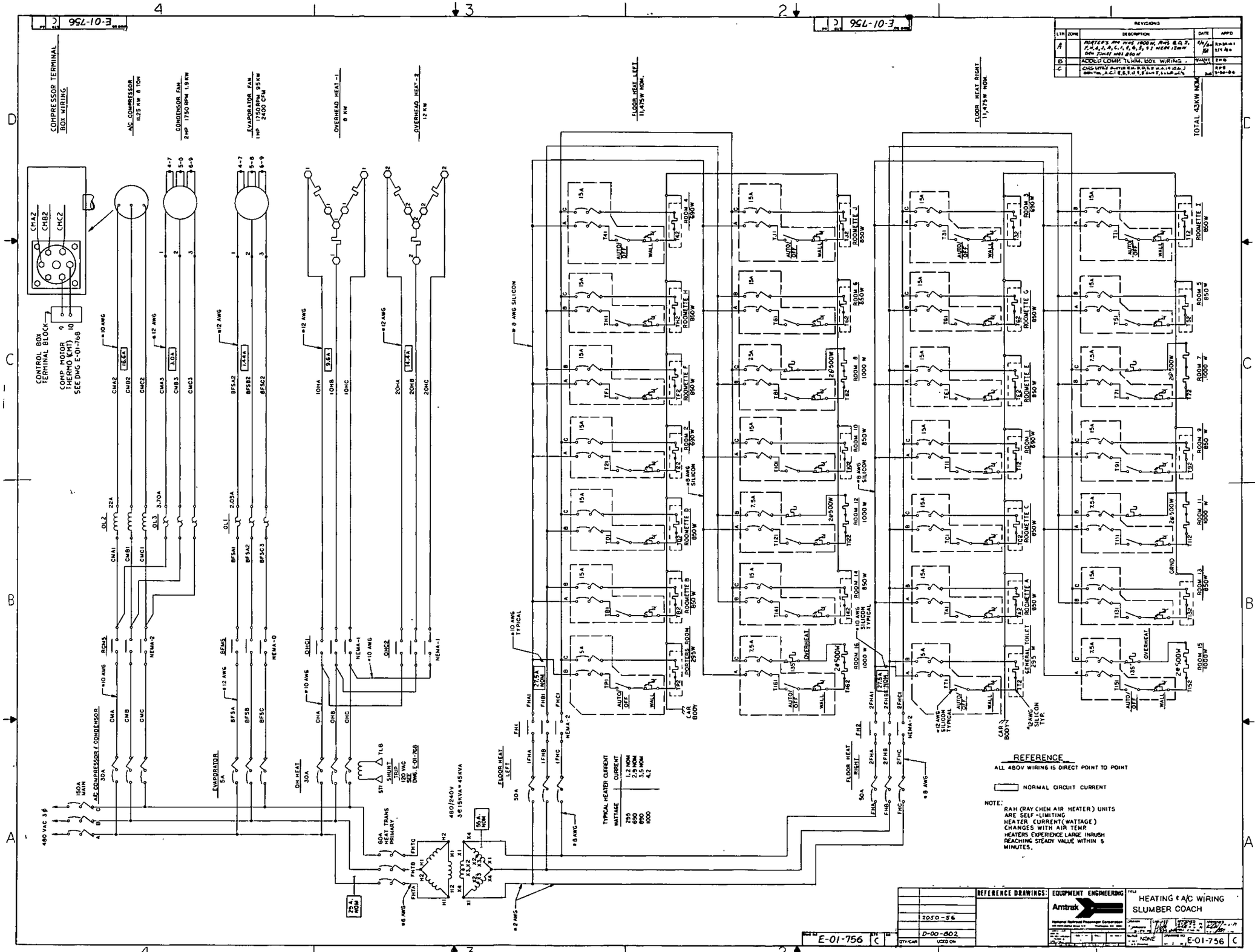
E-01-756
REVISIONS
LTR ZONE DESCRIPTION DATE APPD
A ROOMETTE'S RM NOS 1500 N, RMS 8,9,7, 5,4,3,2,1, 6,9,3,12 NEAR 12 M OPN TOILET WAS 850 W 12/16/82 RJH
B ADDED COMP. TERM. BOX WIRING. 9/16/83 DHB
C CHGD LITTLE Rooms ON R.D.T.S W.A.I.O.D.J NOW ON, A,C,E,B,F,H,K, FROM F, L, M, ON 9/30/86 RPB
COMPRESSOR TERMINAL BOX WIRING
CONTROL BOX TERMINAL BLOCK
COMP. MOTOR THERMOSTAT SEE DWG E-01-768
AC COMPRESSOR 11.25 KW @ TON
CONDENSOR FAN 2HP 1750 RPM 1.9 KW
EVAPORATOR FAN 1HP 1750 RPM 95 KW 2400 CFM
OVERHEAD HEAT-1 8 KW
OVERHEAD HEAT-2 12 KW
FLOOR HEAT LEFT 11,475 W NOM.
FLOOR HEAT RIGHT 11,475 W NOM.
TOTAL 43 KW NOM.
480 VAC 3φ
150A MAIN
AC COMPRESSOR & CONDENSOR 30A
EVAPORATOR 5A
OH HEAT 30A
FLOOR HEAT LEFT 50A
FLOOR HEAT RIGHT 50A
60A HEAT TRANS PRIMARY
480/240V 3Ø 15KVA = 45 KVA
25A NOM
50A NOM
SHUNT TRIP 120 VAC SEE DWG E-01-768
ROOMETTE A 850 W
ROOMETTE B 850 W
ROOMETTE C 850 W
ROOMETTE D 850 W
ROOMETTE E 850 W
ROOMETTE F 850 W
ROOMETTE G 850 W
ROOMETTE H 850 W
ROOMETTE I 850 W
ROOMETTE J 850 W
ROOM 5 950 W
ROOM 6 850 W
ROOM 7 1000 W
ROOM 8 1000 W
ROOM 9 850 W
ROOM 10 850 W
ROOM 11 1000 W
ROOM 12 1000 W
ROOM 13 850 W
ROOM 14 850 W
ROOM 15 1000 W
ROOM 16 1000 W
GANG TOILET 295 W
OVERHEAT
AUTO OFF WALL
#8 AWG SILICON
#10 AWG TYPICAL
#12 AWG SILICON TYPICAL
#12 AWG TYP.
#2 AWG
#6 AWG
#8 AWG
TYPICAL HEATER CURRENT
WATTAGE CURRENT
255 1.2 NOM
690 2.5 NOM
690 3.5 NOM
1000 4.2
REFERENCE
ALL 480V WIRING IS DIRECT POINT TO POINT
NORMAL CIRCUIT CURRENT
NOTE:
RAH (RAY CHEM AIR HEATER) UNITS ARE SELF-LIMITING
HEATER CURRENT (WATTAGE) CHANGES WITH AIR TEMP.
HEATERS EXPERIENCE LARGE INRUSH REACHING STEADY VALUE WITHIN 5 MINUTES.
REFERENCE DRAWINGS:
2050-56
D-00-802
QTY/CAR
USED ON
EQUIPMENT ENGINEERING
Amtrak
HEATING & A/C WIRING
SLUMBER COACH
E-01-756
NONE
E-01-756

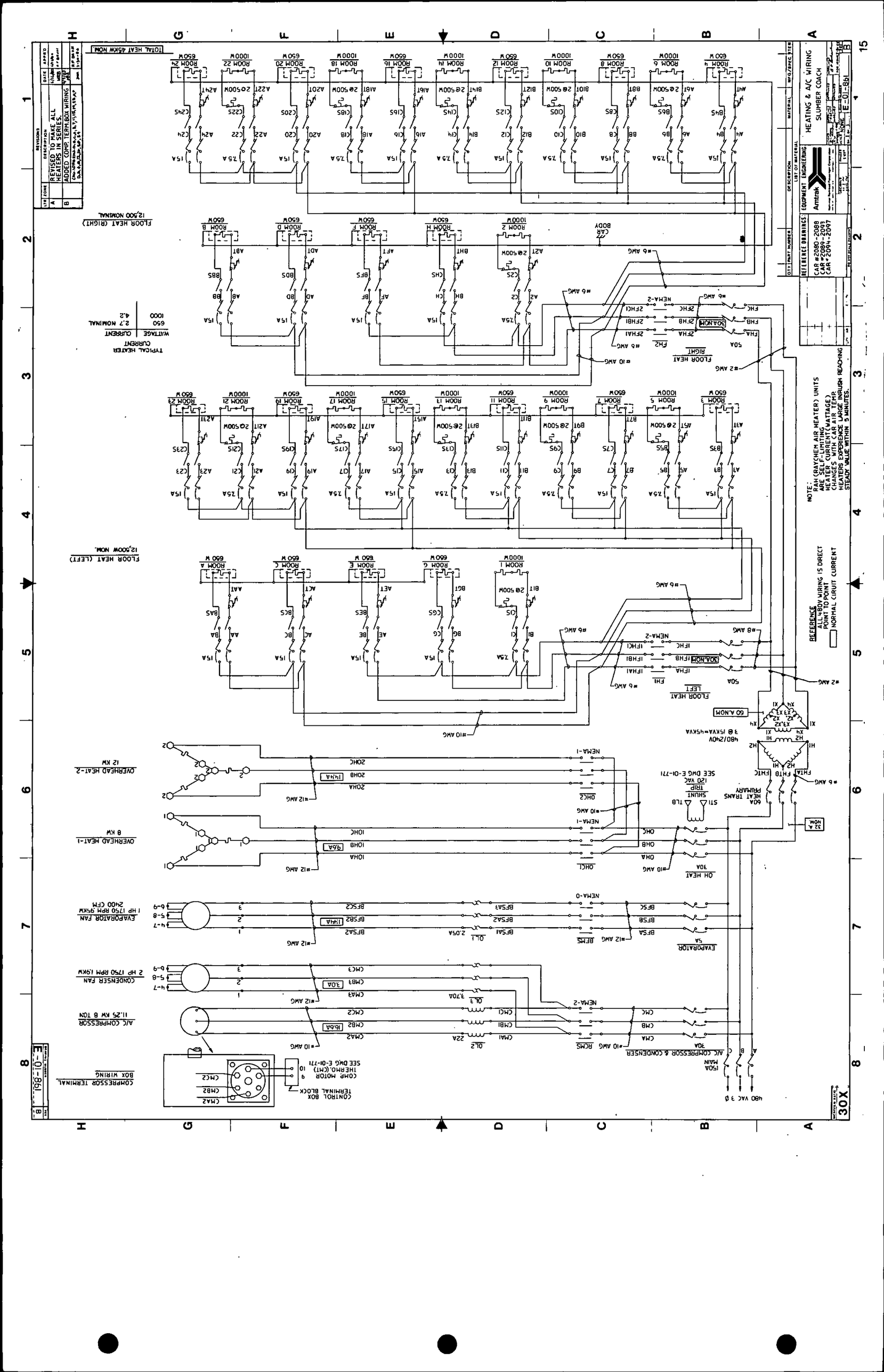
HEATING & A/C WIRING
SLUMBER COACH
E-01-881
Amtrak
EQUIPMENT ENGINEERING
CAR #2080-2088
CAR #2089-2093
CAR #2094-2097
TOTAL HEAT 45KW NOM.
FLOOR HEAT (RIGHT)
12,500 NOMINAL
FLOOR HEAT (LEFT)
12,500W NOM.
TYPICAL HEATER CURRENT
WATTAGE | CURRENT
650 | 2.7 NOMINAL
1000 | 4.2
REVISED TO MAKE ALL HEATERS IN SERIES.
ADDED COMP. TERM. BOX WIRING
NOTE:
RAH (RAYCHEM AIR HEATER) UNITS ARE SELF-LIMITING MEASURED WATTAGE). CHANGES WITH CAR AIR TEMP. HEATERS EXPERIENCE LARGE INRUSH REACHING STEADY VALUE WITHIN 5 MINUTES.
REFERENCE
ALL 480V WIRING IS DIRECT POINT TO POINT
NORMAL CIRCUIT CURRENT
480/240V
3 Ø 15KVA=45KVA
60A HEAT TRANS PRIMARY
SHUNT TRIP 120 VAC
SEE DWG E-01-771
OVERHEAD HEAT-2
12 KW
OVERHEAD HEAT-1
8 KW
EVAPORATOR FAN
1 HP 1750 RPM .95KW
2400 CFM
CONDENSER FAN
2 HP 1750 RPM 1.9KW
A/C COMPRESSOR
11.25 KW 8 TON
COMPRESSOR TERMINAL BOX WIRING
CONTROL BOX TERMINAL BLOCK
COMP MOTOR THERMO.(CMT)
SEE DWG E-01-771
480 VAC 3 Ø
30X
E-01-881
B

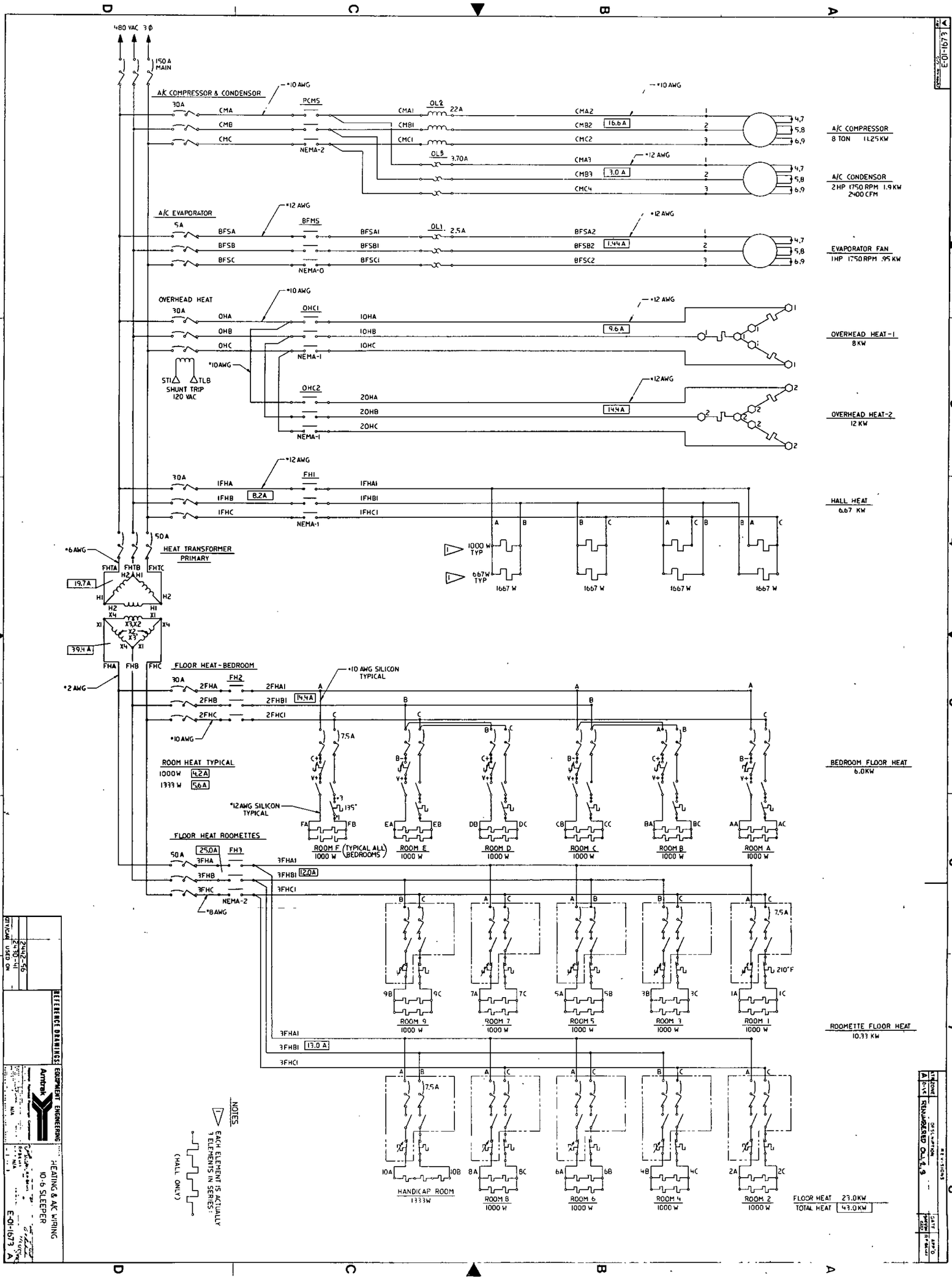
480 VAC 3Ø
150 A MAIN
A/C COMPRESSOR & CONDENSOR
30A
CMA
CMB
CMC
PCMS
NEMA-2
*10 AWG
CMA1
CMB1
CMC1
OL2
22A
CMA2
CMB2
CMC2
16.6 A
OL3
3.70A
CMA3
CMB3
CMC4
3.0 A
*12 AWG
A/C COMPRESSOR
8 TON 11.25 KW
A/C CONDENSOR
2 HP 1750 RPM 1.9 KW
2400 CFM
A/C EVAPORATOR
5A
BFSA
BFSB
BFSC
BFMS
NEMA-0
BFSA1
BFSB1
BFSC1
OL1
2.5A
BFSA2
BFSB2
BFSC2
1.44 A
EVAPORATOR FAN
1HP 1750 RPM .95 KW
OVERHEAD HEAT
OHA
OHB
OHC
OHC1
NEMA-1
10HA
10HB
10HC
9.6 A
OVERHEAD HEAT-1
8 KW
STI
TLB
SHUNT TRIP
120 VAC
OHC2
20HA
20HB
20HC
14.4 A
OVERHEAD HEAT-2
12 KW
IFHA
IFHB
IFHC
FH1
8.2A
IFHA1
IFHB1
IFHC1
HALL HEAT
6.67 KW
1000 W TYP
667 W TYP
1667 W
50A
HEAT TRANSFORMER PRIMARY
*6 AWG
FHTA
FHTB
FHTC
19.7A
39.4 A
FHA
FHB
FHC
*2 AWG
FLOOR HEAT-BEDROOM
2FHA
2FHB
2FHC
FH2
2FHA1
2FHB1
2FHC1
14.4A
*10 AWG SILICON TYPICAL
7.5A
ROOM HEAT TYPICAL
1000 W 4.2A
1333 W 5.6A
*12 AWG SILICON TYPICAL
135°
ROOM F (TYPICAL ALL BEDROOMS)
1000 W
ROOM E
ROOM D
ROOM C
ROOM B
ROOM A
BEDROOM FLOOR HEAT
6.0 KW
FLOOR HEAT ROOMETTES
25.0A
FH3
3FHA
3FHB
3FHC
3FHA1
3FHB1
3FHC1
12.0A
NEMA-2
*8 AWG
210°F
ROOM 9
ROOM 7
ROOM 5
ROOM 3
ROOM 1
ROOMETTE FLOOR HEAT
10.33 KW
13.0 A
HANDICAP ROOM
1333 W
ROOM 8
ROOM 6
ROOM 4
ROOM 2
FLOOR HEAT 23.0 KW
TOTAL HEAT 43.0 KW
NOTES
EACH ELEMENT IS ACTUALLY 3 ELEMENTS IN SERIES
(HALL ONLY)
REFERENCE DRAWINGS
2442-56
2430-41
CITY/CAR USED ON
EQUIPMENT ENGINEERING
Amtrak
HEATING & A/C WIRING
10-6 SLEEPER
E-01-1673 A
E-01-1673
REVISIONS
RENUMBERED OL1, 2, 3

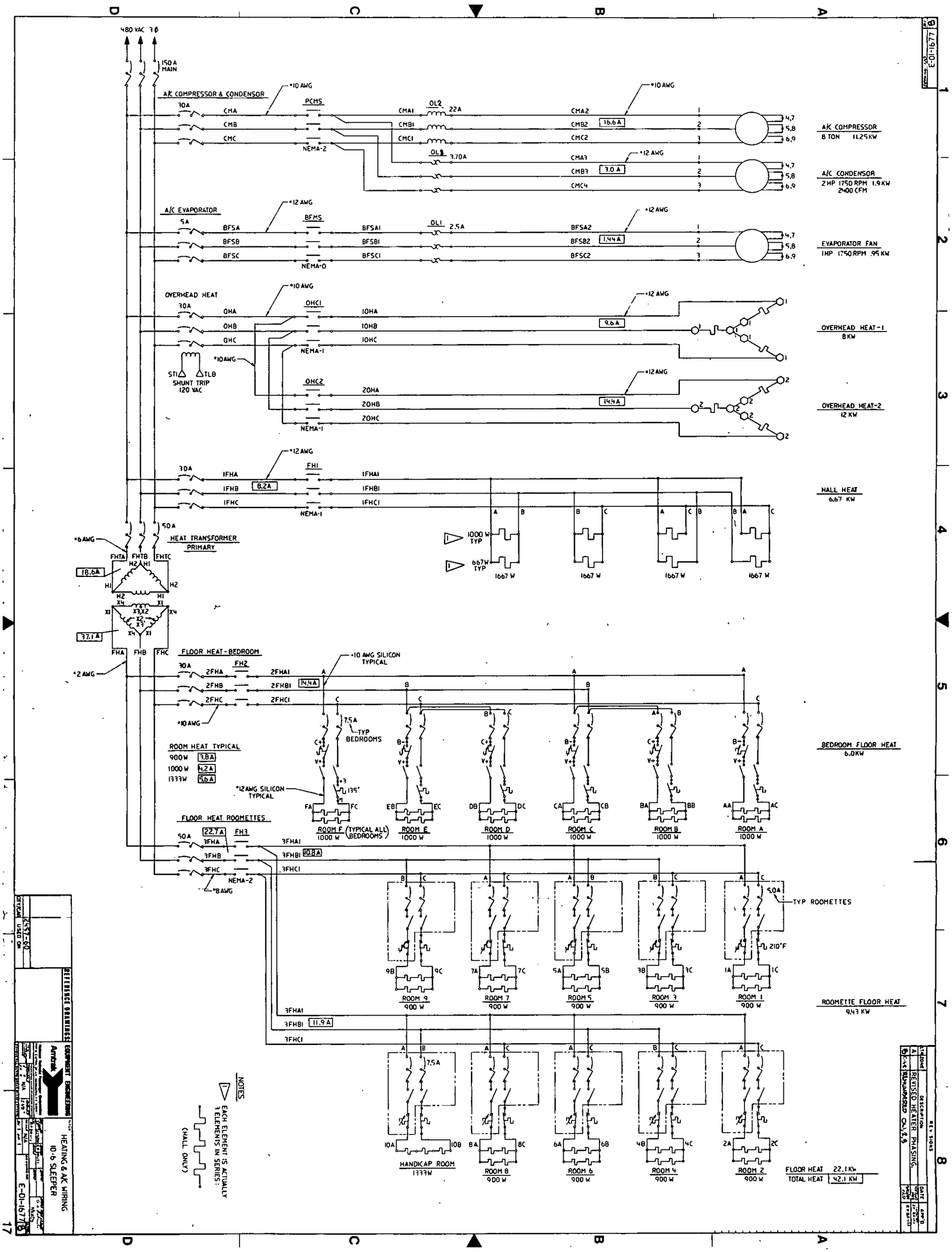

480 VAC 3Ø
150 A MAIN
A/C COMPRESSOR & CONDENSOR
PCMS
NEMA-2
A/C COMPRESSOR 8 TON 11.25 KW
A/C CONDENSOR 2 HP 1750 RPM 1.9 KW 2400 CFM
A/C EVAPORATOR
BFMS
NEMA-0
EVAPORATOR FAN 1 HP 1750 RPM .95 KW
OVERHEAD HEAT
OHC1
NEMA-1
SHUNT TRIP 120 VAC
OVERHEAD HEAT-1 8 KW
OVERHEAD HEAT-2 12 KW
FH1
HALL HEAT 6.67 KW
HEAT TRANSFORMER PRIMARY
FLOOR HEAT-BEDROOM
FH2
ROOM HEAT TYPICAL
900 W 3.8 A
1000 W 4.2 A
1333 W 5.6 A
BEDROOM FLOOR HEAT 6.0 KW
FLOOR HEAT ROOMETTES
FH3
ROOM F (TYPICAL ALL BEDROOMS) 1000 W
ROOM E 1000 W
ROOM D 1000 W
ROOM C 1000 W
ROOM B 1000 W
ROOM A 1000 W
TYP ROOMETTES
ROOM 9 900 W
ROOM 7 900 W
ROOM 5 900 W
ROOM 3 900 W
ROOM 1 900 W
ROOMETTE FLOOR HEAT 9.43 KW
HANDICAP ROOM 1333 W
ROOM 8 900 W
ROOM 6 900 W
ROOM 4 900 W
ROOM 2 900 W
FLOOR HEAT 22.1 KW
TOTAL HEAT 42.1 KW
NOTES
EACH ELEMENT IS ACTUALLY 3 ELEMENTS IN SERIES: (HALL ONLY)
REFERENCE DRAWINGS
EQUIPMENT ENGINEERING
Amtrak
HEATING & A/C WIRING 10-6 SLEEPER
E-01-1677
REVISED HEATER PHASING

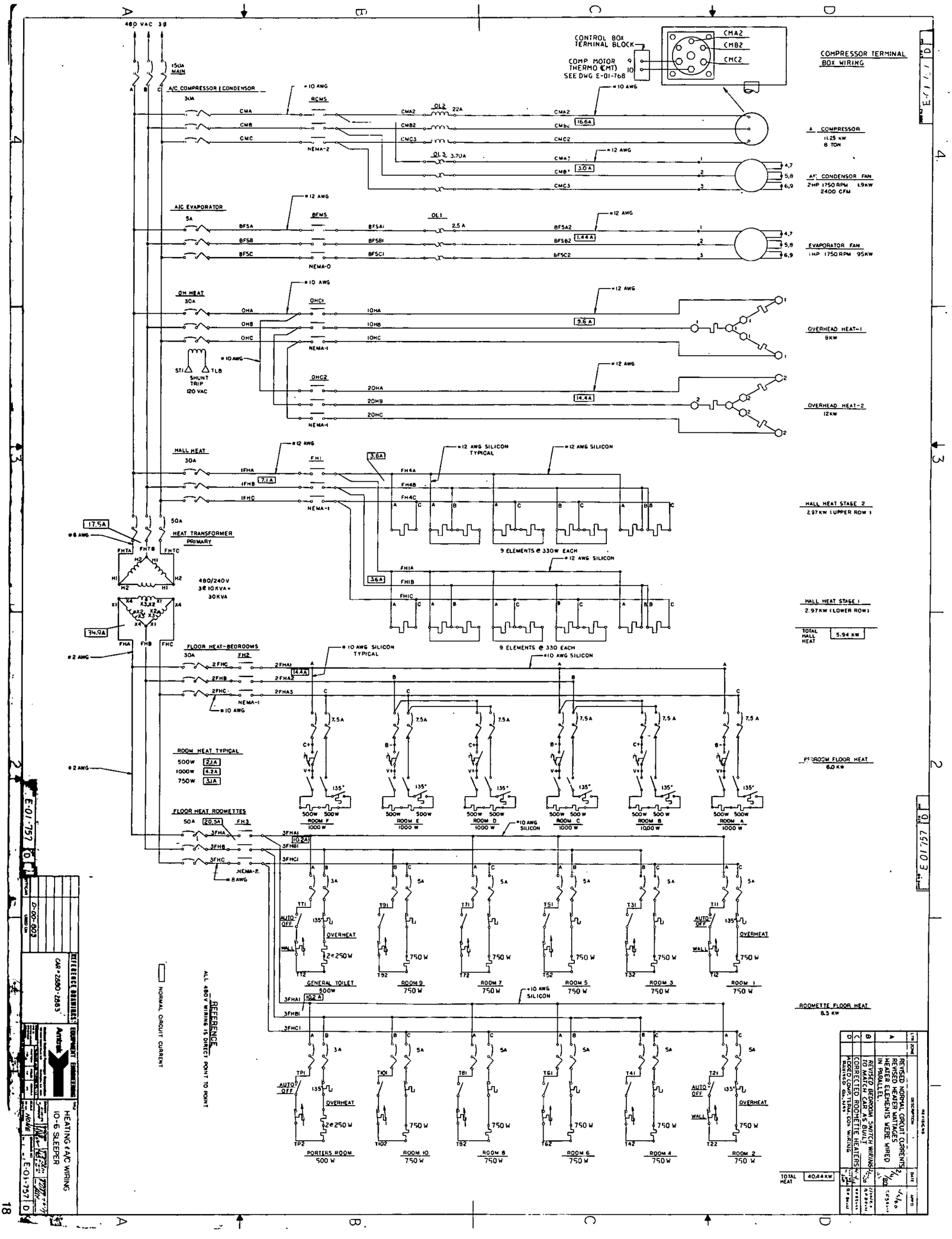

480 VAC 3Ø
150A MAIN
A/C COMPRESSOR & CONDENSOR
30A
CONTROL BOX TERMINAL BLOCK
COMP MOTOR THERMO (CMT) SEE DWG E-01-768
CMA2
CMB2
CMC2
COMPRESSOR TERMINAL BOX WIRING
A COMPRESSOR 11.25 KW 8 TON
A/C CONDENSOR FAN 2HP 1750 RPM 1.9KW 2400 CFM
A/C EVAPORATOR
5A
EVAPORATOR FAN 1HP 1750 RPM 95KW
OH HEAT
30A
SHUNT TRIP 120 VAC
OVERHEAD HEAT-1 8KW
OVERHEAD HEAT-2 12KW
HALL HEAT
30A
HALL HEAT STAGE 2 2.97KW (UPPER ROW)
HALL HEAT STAGE 1 2.97KW (LOWER ROW)
TOTAL HALL HEAT 5.94 KW
9 ELEMENTS @ 330W EACH
9 ELEMENTS @ 330 EACH
HEAT TRANSFORMER PRIMARY
480/240V 3Ø 10KVA = 30KVA
FLOOR HEAT-BEDROOMS
30A
BEDROOM FLOOR HEAT 6.0 KW
ROOM HEAT TYPICAL
500W 2.1A
1000W 4.2A
750W 3.1A
FLOOR HEAT ROOMETTES
50A 20.3A
ROOM F 1000 W
ROOM E 1000 W
ROOM D 1000 W
ROOM C 1000 W
ROOM B 1000 W
ROOM A 1000 W
GENERAL TOILET 500W
ROOM 9 750 W
ROOM 7 750 W
ROOM 5 750 W
ROOM 3 750 W
ROOM 1 750 W
ROOMETTE FLOOR HEAT 8.5 KW
PORTERS ROOM 500 W
ROOM 10 750 W
ROOM 8 750 W
ROOM 6 750 W
ROOM 4 750 W
ROOM 2 750 W
TOTAL HEAT 40.44 KW
NORMAL CIRCUIT CURRENT
REFERENCE
ALL 480V WIRING IS DIRECT POINT TO POINT
REFERENCE DRAWINGS: CAR-2880-2883
EQUIPMENT ENGINEERING
Antrak
HEATING & A/C WIRING 10-6 SLEEPER
E-01-757 D
REVISED NORMAL CIRCUIT CURRENTS REVISED HEATER WATTAGES HEATER ELEMENTS WERE WIRED IN PARALLEL.
REVISED BEDROOM SWITCH WIRING TO MATCH CAR AS BUILT
CORRECTED ROOMETTE HEATERS
ADDED COMP. TERM. BOX WIRING

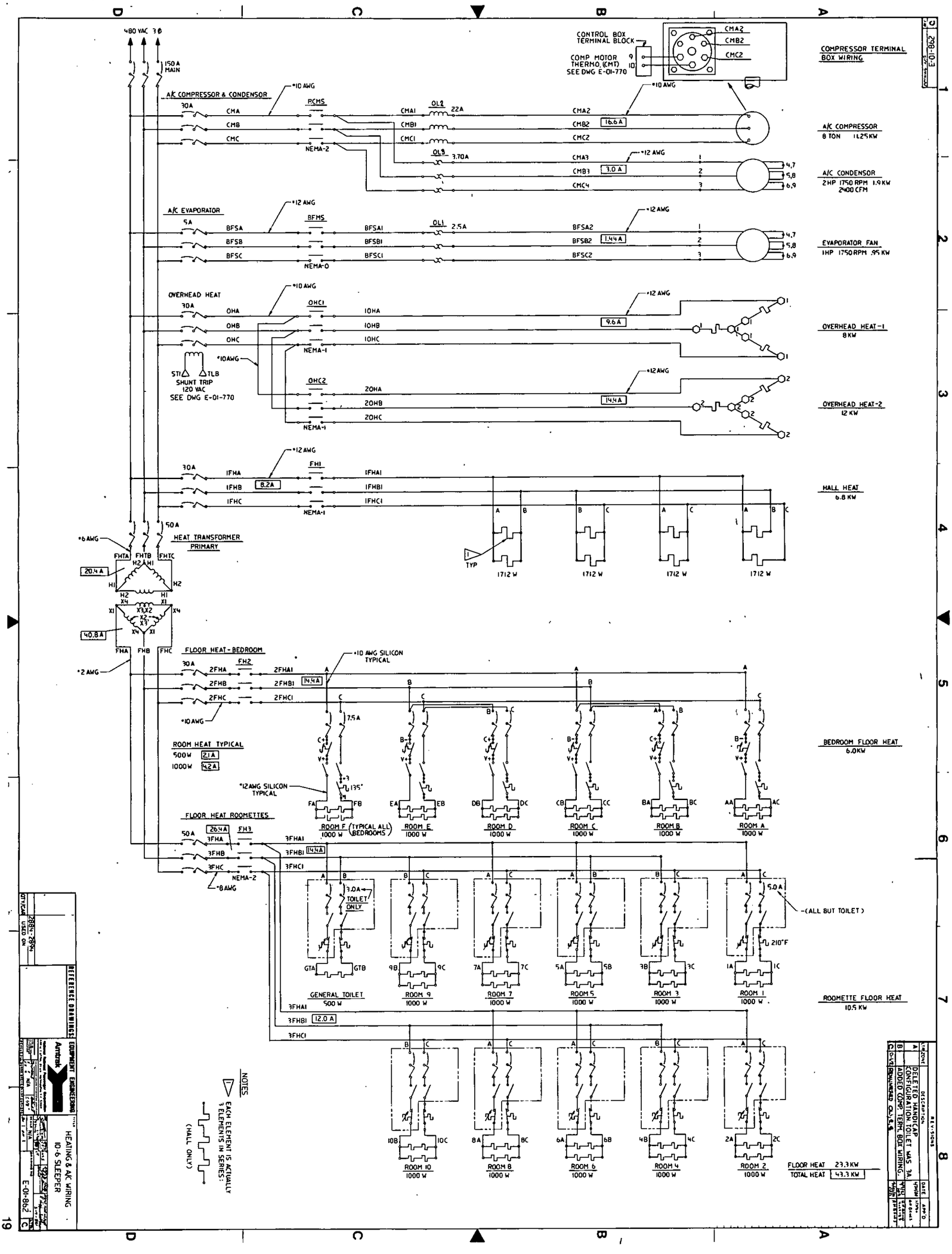

480 VAC 3Ø
150A MAIN
A/C COMPRESSOR & CONDENSOR
CONTROL BOX TERMINAL BLOCK
COMP MOTOR THERMO. (CMT) SEE DWG E-01-770
COMPRESSOR TERMINAL BOX WIRING
A/C COMPRESSOR 8 TON 11.25KW
A/C CONDENSOR 2HP 1750 RPM 1.9KW 2400 CFM
A/C EVAPORATOR
EVAPORATOR FAN 1HP 1750RPM .95KW
OVERHEAD HEAT
SHUNT TRIP 120 VAC SEE DWG E-01-770
OVERHEAD HEAT-1 8KW
OVERHEAD HEAT-2 12KW
HALL HEAT 6.8KW
HEAT TRANSFORMER PRIMARY
FLOOR HEAT-BEDROOM
ROOM HEAT TYPICAL
500W 2.1A
1000W 4.2A
BEDROOM FLOOR HEAT 6.0KW
FLOOR HEAT ROOMETTES
ROOM F (TYPICAL ALL BEDROOMS) 1000 W
ROOM E 1000 W
ROOM D 1000 W
ROOM C 1000 W
ROOM B 1000 W
ROOM A 1000 W
GENERAL TOILET 500 W
ROOM 9 1000 W
ROOM 7 1000 W
ROOM 5 1000 W
ROOM 3 1000 W
ROOM 1 1000 W
ROOMETTE FLOOR HEAT 10.5 KW
ROOM 10 1000 W
ROOM 8 1000 W
ROOM 6 1000 W
ROOM 4 1000 W
ROOM 2 1000 W
FLOOR HEAT 23.3KW
TOTAL HEAT 43.3KW
NOTES
EACH ELEMENT IS ACTUALLY 3 ELEMENTS IN SERIES:
(HALL ONLY)
REFERENCE DRAWINGS
EQUIPMENT ENGINEERING
Amtrak
HEATING & A/C WIRING 10-6 SLEEPER
E-01-862
DELETED HANDICAP CONFIGURATION TOILET WAS 3A.
ADDED COMP. TERM. BOX WIRING.

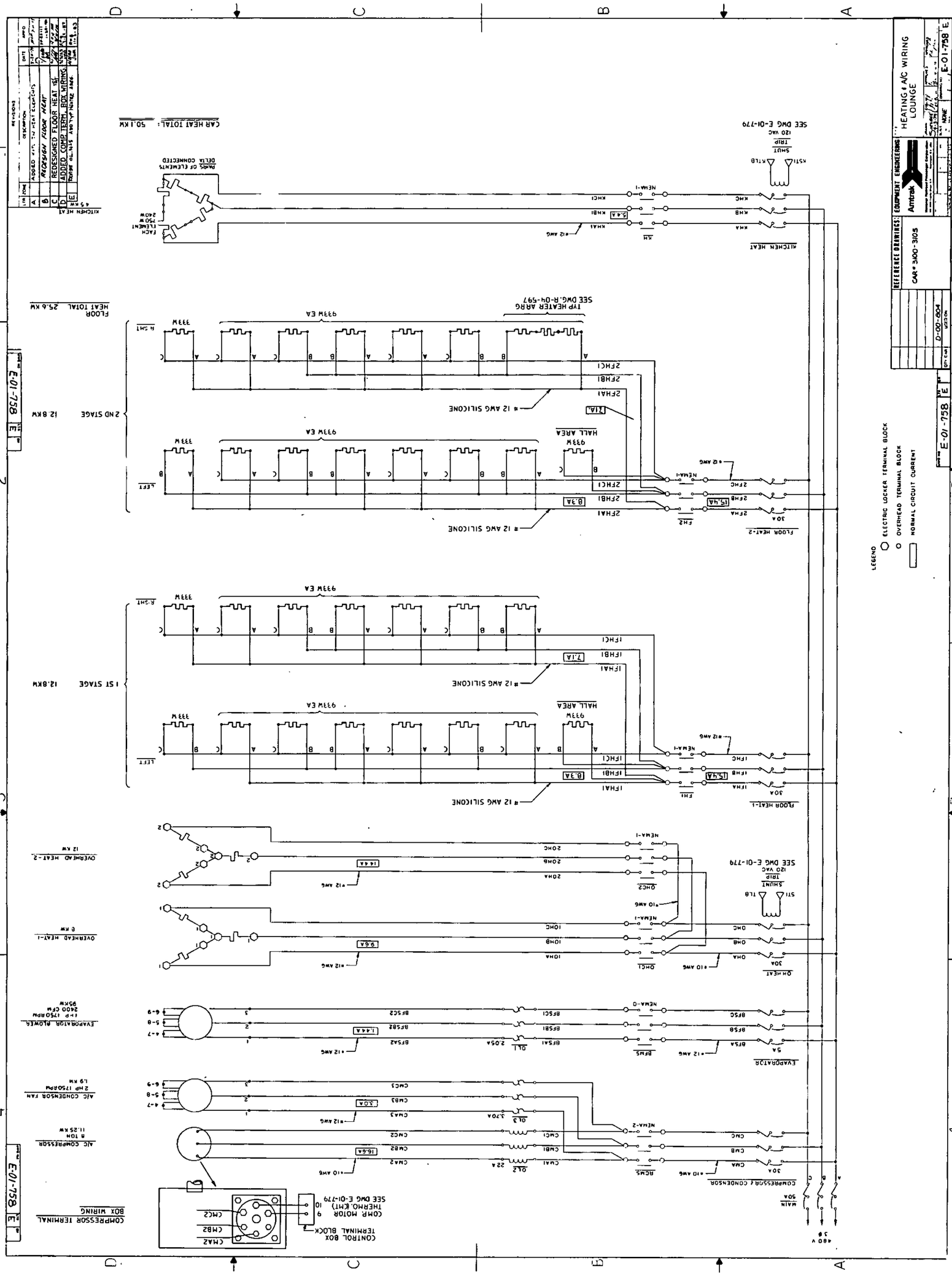
HEATING & A/C WIRING
LOUNGE
EQUIPMENT ENGINEERING
Amtrak
REFERENCE DRAWINGS:
CAR # 3400-3105
E-01-758 E
E-01-758
E-01-758
E-01-758
CAR HEAT TOTAL: 50.1 KW
KITCHEN HEAT
6.5 KW
FLOOR HEAT TOTAL 25.6 KW
2ND STAGE 12.8KW
1ST STAGE 12.8KW
HALL AREA
9.3W
33.3W
9.33W EA
TYP HEATER ARRG
SEE DWG. R-04-597
12 AWG SILICONE
FLOOR HEAT-2
FLOOR HEAT-1
OVERHEAD HEAT-2
12 KW
OVERHEAD HEAT-1
6 KW
EVAPORATOR MOTOR
1 HP 1750 RPM
2400 CFM
.95KW
A/C CONDENSOR FAN
2 HP 1750 RPM
1.9 KW
A/C COMPRESSOR
8 TON
11.25 KW
COMPRESSOR TERMINAL
BOX WIRING
CONTROL BOX
TERMINAL BLOCK
COMP MOTOR
THERMO. (CMT)
SEE DWG E-01-779
SEE DWG E-01-779
LEGEND
ELECTRIC LOCKER TERMINAL BLOCK
OVERHEAD TERMINAL BLOCK
NORMAL CIRCUIT CURRENT
480 V
3 Φ
MAIN
50A
COMPRESSOR & CONDENSOR
EVAPORATOR
O/L HEAT
A/C HEAT
KITCHEN HEAT
FLOOR HEAT-2
FLOOR HEAT-1
REDESIGNED FLOOR HEAT
ADDED COMP. TERM. BOX WIRING

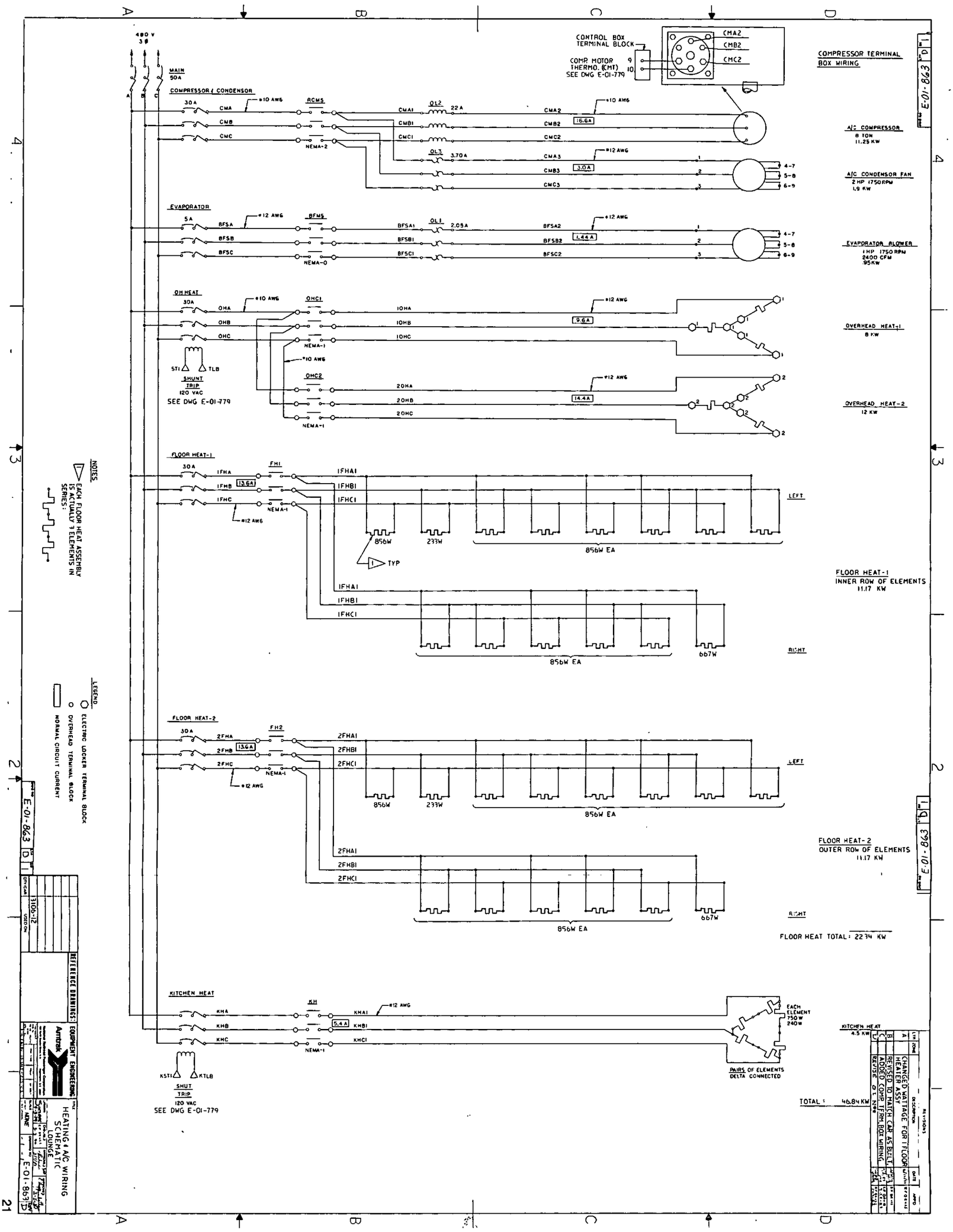

480 V 3Ø
MAIN 50A
COMPRESSOR / CONDENSOR
CONTROL BOX TERMINAL BLOCK
COMP. MOTOR THERMO. (CMT) SEE DWG E-01-779
COMPRESSOR TERMINAL BOX WIRING
A/C COMPRESSOR 8 TON 11.25 KW
A/C CONDENSOR FAN 2 HP 1750 RPM 1.9 KW
EVAPORATOR
EVAPORATOR BLOWER 1 HP 1750 RPM 2400 CFM .95 KW
OH HEAT
OVERHEAD HEAT-1 8 KW
OVERHEAD HEAT-2 12 KW
SHUNT TRIP 120 VAC SEE DWG E-01-779
FLOOR HEAT-1
FLOOR HEAT-1 INNER ROW OF ELEMENTS 11.17 KW
FLOOR HEAT-2
FLOOR HEAT-2 OUTER ROW OF ELEMENTS 11.17 KW
FLOOR HEAT TOTAL: 22.34 KW
KITCHEN HEAT
KITCHEN HEAT 4.5 KW
EACH ELEMENT 750 W 240 W
PAIRS OF ELEMENTS DELTA CONNECTED
TOTAL: 46.84 KW
NOTES
EACH FLOOR HEAT ASSEMBLY IS ACTUALLY 3 ELEMENTS IN SERIES:
LEGEND
ELECTRIC LOCKER TERMINAL BLOCK
OVERHEAD TERMINAL BLOCK
NORMAL CIRCUIT CURRENT
REFERENCE DRAWINGS: EQUIPMENT ENGINEERING
HEATING & A/C WIRING SCHEMATIC LOUNGE
E-01-863

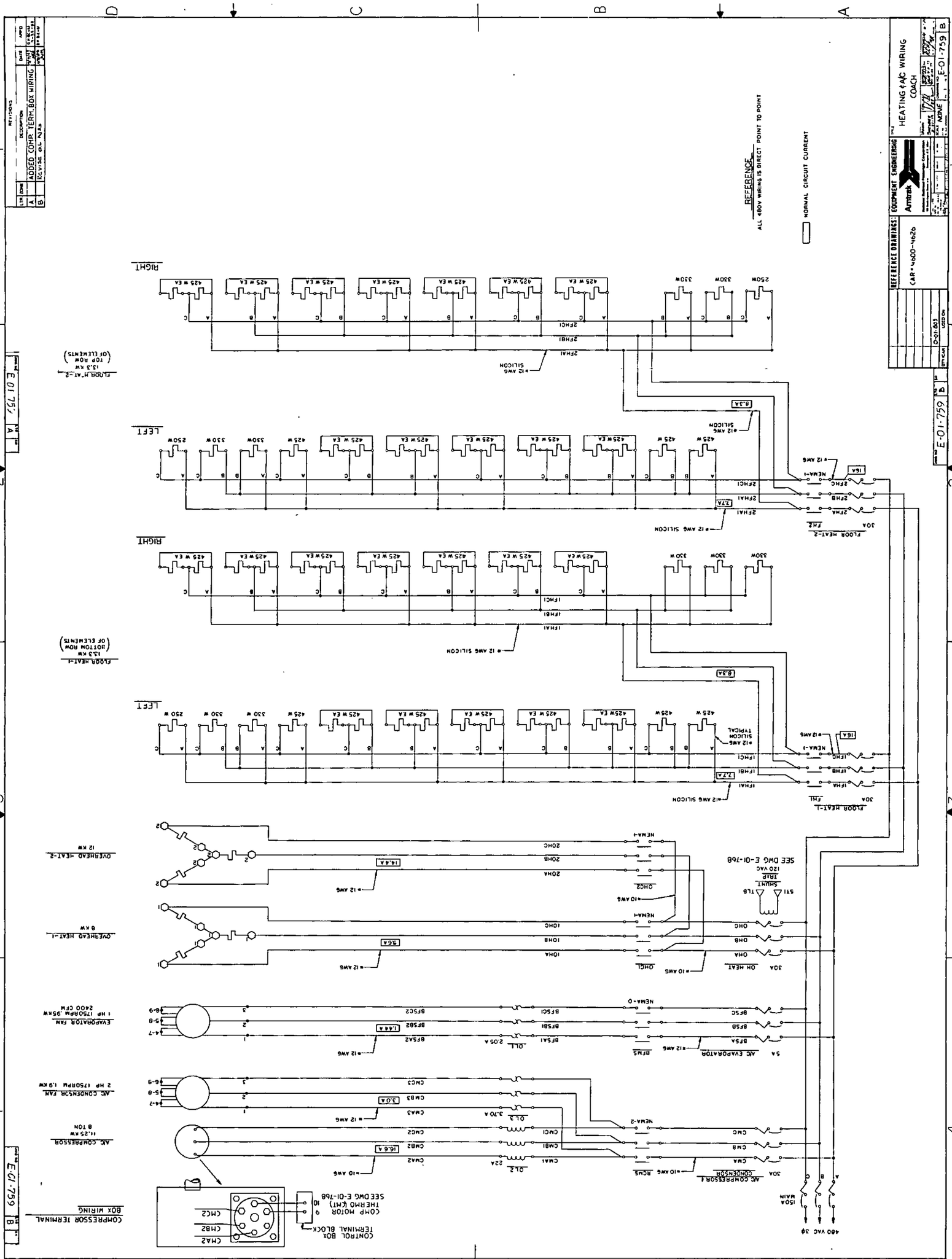
REFERENCE
ALL 480V WIRING IS DIRECT POINT TO POINT
NORMAL CIRCUIT CURRENT
REFERENCE DRAWINGS
EQUIPMENT ENGINEERING
HEATING & AC WIRING
COACH
E-01-759
REVISIONS
ADDED COMP. TERM. BOX WIRING
RIGHT
LEFT
FLOOR HEAT-2
FLOOR HEAT-1
OVERHEAD HEAT-2
OVERHEAD HEAT-1
EVAPORATOR FAN
AC COMPRESSOR
AC CONDENSER FAN
COMPRESSOR TERMINAL BOX WIRING
SEE DWG E-01-768
480 VAC 3Φ
150A MAIN

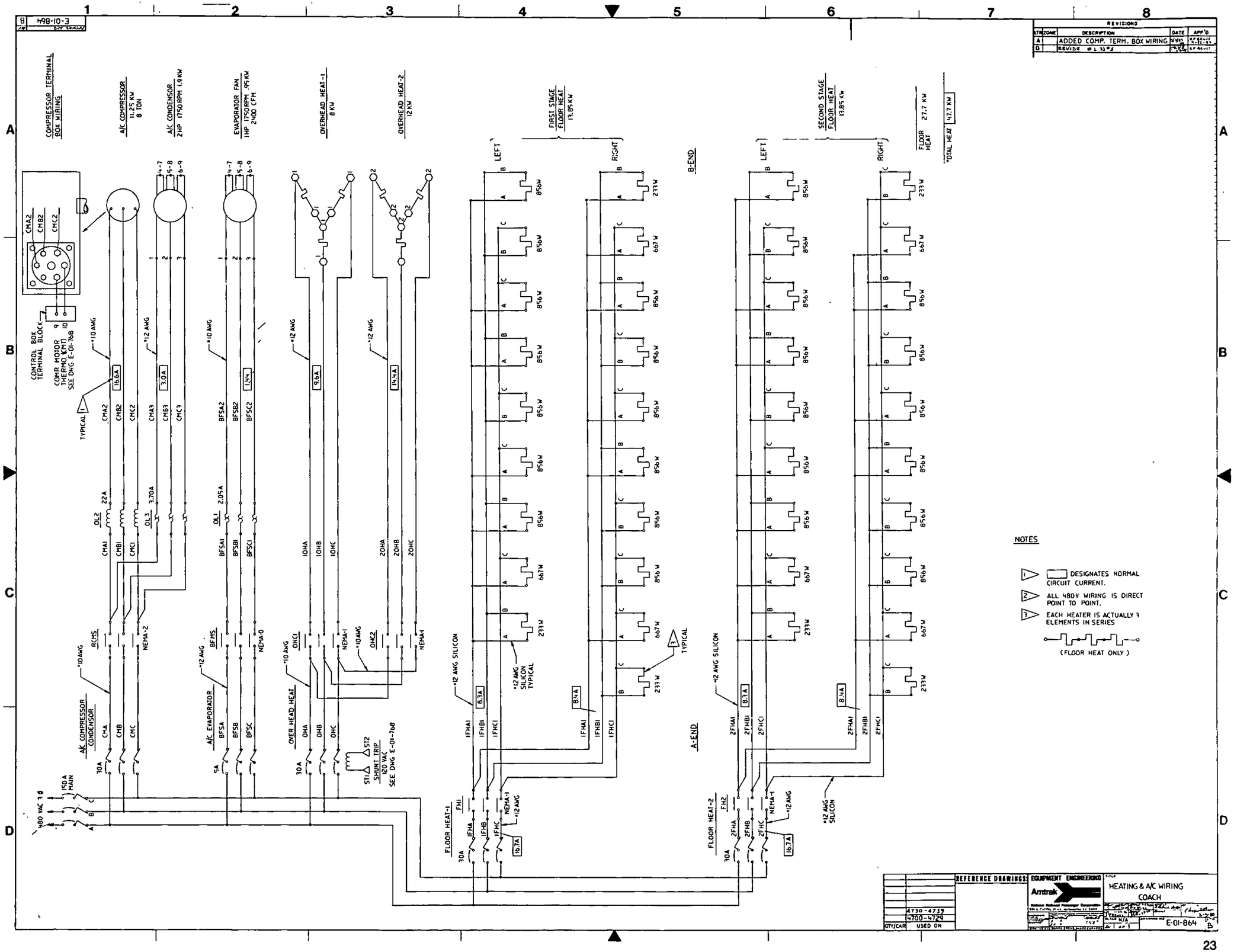
REVISIONS
LTR ZONE DESCRIPTION DATE APP'D
A ADDED COMP. TERM. BOX WIRING
D REVISED
COMPRESSOR TERMINAL BOX WIRING
A/C COMPRESSOR 11.25 KW 8 TON
A/C CONDENSOR 2HP 1750 RPM 1.9 KW
EVAPORATOR FAN 1HP 1750 RPM .95 KW 2400 CFM
OVERHEAD HEAT-1 8 KW
OVERHEAD HEAT-2 12 KW
FIRST STAGE FLOOR HEAT 13.85 KW
SECOND STAGE FLOOR HEAT 13.85 KW
FLOOR HEAT 27.7 KW
TOTAL HEAT 41.7 KW
B-END
A-END
LEFT
RIGHT
CONTROL BOX TERMINAL BLOCK
COMP MOTOR THERMO (CMT) SEE DWG E-01-768
TYPICAL
CMA2
CMB2
CMC2
CMA3
CMB3
CMC3
*10 AWG
*12 AWG
16.6A
3.0A
1.4A
9.8A
14.4A
BFSA2
BFSB2
BFSC2
OL2 2.2A
OL3 3.70A
OL1 2.05A
CMA1
CMB1
CMC1
BFSA1
BFSB1
BFSC1
RCMS
BFMS
NEMA-2
NEMA-0
NEMA-1
OHC1
OHC2
10HA
10HB
10HC
20HA
20HB
20HC
A/C COMPRESSOR CONDENSOR
A/C EVAPORATOR
OVER HEAD HEAT
30A
5A
CMA
CMB
CMC
BFSA
BFSB
BFSC
OHA
OHB
OHC
ST1 SHUNT TRIP 120 VAC
ST2
SEE DWG E-01-768
480 VAC 3 Ø
150 A MAIN
*12 AWG SILICON
*12 AWG SILICON TYPICAL
8.3A
8.4A
16.7A
1FHA1
1FHB1
1FHC1
2FHA1
2FHB1
2FHC1
FLOOR HEAT-1 FH1
FLOOR HEAT-2 FH2
1FHA
1FHB
1FHC
2FHA
2FHB
2FHC
856 W
667 W
233 W
NOTES
DESIGNATES NORMAL CIRCUIT CURRENT.
ALL 480V WIRING IS DIRECT POINT TO POINT.
EACH HEATER IS ACTUALLY 3 ELEMENTS IN SERIES
(FLOOR HEAT ONLY)
REFERENCE DRAWINGS:
EQUIPMENT ENGINEERING
Amtrak
TITLE
HEATING & A/C WIRING
COACH
4730-4739
4700-4729
CITY/CAR USED ON
N/A
E-01-864

LTR	ZONE	DESCRIPTION	DATE	APPD
A		REDESIGNED FLOOR & HALL HEAT	7/28/78	
B		REDESIGNED FLOOR & HALL HEAT	2-15-80	
C		ADDED COMP. TERM BOX WIRING.	9/4/83	
D		REVISED PER NCR 1051	11/30/84	

E-01-754 C

E-01-754 D

COMPRESSOR TERMINAL BOX WIRING

BODY AC COMPRESSOR 11.25 KW 8 TON

BODY AC CONDENSOR FAN 2 HP 750 RPM 1.9 KW

BODY EVAPORATOR FAN 1 HP 750 RPM .95 KW 2400 CFM

BODY OVERHEAD HEAT-1 8 KW

BODY OVERHEAD HEAT-2 12 KW

FLOOR HEAT-1 6.6 KW

FLOOR HEAT-2 6.6 KW

HALL FLOOR HEAT 5.9 KW

TOTAL FLOOR HEAT 19.1 KW

KITCHEN AC COMPRESSOR 11.25 KW 8 TON

KITCHEN AC CONDENSOR FAN 2 HP 750 RPM 1.9 KW

KITCHEN EVAPORATOR FAN 1 HP 750 RPM .95 KW 2400 CFM

KITCHEN OVHD HEAT-1 8 KW

KITCHEN OVHD HEAT-2 12 KW

TOTAL HEAT 59 HKW

CONTROL BOX TERMINAL BLOCK, COMP. MOTOR THERMO. (KM1) SEE DWG E-01-769 & 772

330W EACH

660W EACH

TYP

BODY COMPRESSOR & CONDENSOR 30A

BODY EVAPORATOR 5A

BODY OH. HEAT 30A

FLOOR HEAT-1 30A

FLOOR HEAT-2 30A

HALL HEAT 30A

KITCHEN COMPRESSOR & CONDENSOR 30A

KITCHEN EVAPORATOR 5A

KITCHEN OH. HEAT 30A

SHUNT TRIP 120 VAC SEE DWG E-01-769 & E-01-772

MAIN 200A 480 V 3Φ

NOTES

EACH ELEMENT IS ACTUALLY 3 ELEMENTS IN SERIES: (FLOOR HEAT ONLY)

LEGEND

ELECTRIC LOCKER TERMINAL BLOCK

OVERHEAD TERMINAL BLOCK

NORMAL CIRCUIT CURRENT

REFERENCE DRAWINGS: CAR # 8500-8504

EQUIPMENT ENGINEERING — Amtrak

TITLE: HEATING & A/C WIRING DINER

SCALE: NONE

E-01-754 D

E-01-754 D

D-00-806

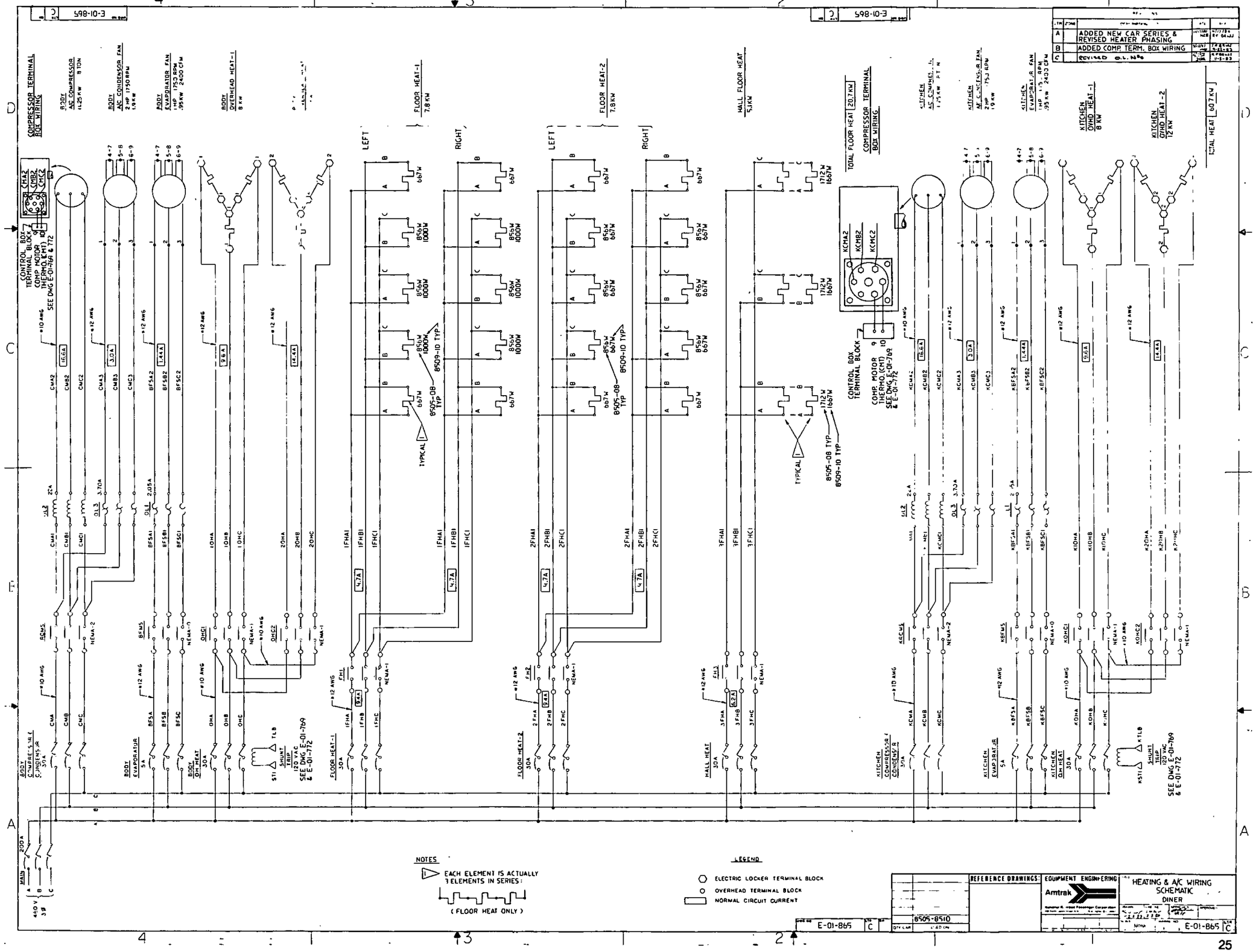
COMPRESSOR TERMINAL BOX WIRING
BODY A/C COMPRESSOR 12.5 KW 8 TON
BODY A/C CONDENSOR FAN 2 HP 1750 RPM 1.9 KW
BODY EVAPORATOR FAN 1 HP 1750 RPM .95 KW 2400 CFM
BODY OVERHEAD HEAT-1 8 KW
FLOOR HEAT-1 7.8 KW
FLOOR HEAT-2 7.8 KW
HALL FLOOR HEAT 5.1 KW
TOTAL FLOOR HEAT 20.7 KW
KITCHEN A/C COMPRESSOR 1.5 KW 5 TON
KITCHEN A/C CONDENSER FAN 2 HP 1750 RPM 1.9 KW
KITCHEN EVAPORATOR FAN 1 HP 1750 RPM .95 KW 2400 CFM
KITCHEN OVHD HEAT-1 8 KW
KITCHEN OVHD HEAT-2 12 KW
TOTAL HEAT 68.7 KW
CONTROL BOX TERMINAL BLOCK
COMP. MOTOR THERMO. (CMT) SEE DWG E-01-768 & E-01-772
SEE DWG E-01-769 & E-01-772
SHUNT TRIP 120 VAC
BODY COMPRESSOR 30A
BODY EVAPORATOR 5A
BODY OH HEAT 30A
FLOOR HEAT-1 30A
FLOOR HEAT-2 30A
HALL HEAT 30A
KITCHEN COMPRESSOR / CONDENSER 30A
KITCHEN EVAPORATOR 5A
KITCHEN OH HEAT 30A
MAIN 200A
450 V 3Φ
NOTES
EACH ELEMENT IS ACTUALLY 3 ELEMENTS IN SERIES:
(FLOOR HEAT ONLY)
LEGEND
ELECTRIC LOCKER TERMINAL BLOCK
OVERHEAD TERMINAL BLOCK
NORMAL CIRCUIT CURRENT
REVISIONS
A ADDED NEW CAR SERIES & REVISED HEATER PHASING
B ADDED COMP. TERM. BOX WIRING
C REVISED O.L. NOS
REFERENCE DRAWINGS:
EQUIPMENT ENGINEERING
Amtrak
HEATING & A/C WIRING SCHEMATIC DINER
E-01-865 C
8505-8510
E-01-865 C

REVISIONS				
LTR	ZONE	DESCRIPTION	DATE	APP'D
A		ADDED "PDR". REVISED "PHT". ADDED CONTROL OPENING & CLOSING PRESSURES. REVISED WIRING TO TEMP CONTROLS TO MATCH TEMP CONT. SCHEMATICS. ADDED WIRE DESIGNATIONS.	TBS 9/19/81	RFBRUSS 9/17/81
B	D-8	REVISED TITLE	TBS 4/13/84	RFBRUSS 6/11/84

120 VAC, 1 Φ, 60 HZ

460 V, 3 Φ, 60 HZ

ACIC1

ACIB1

L3 L2 L1

LOR TDR SD1 TDR RCMS OL2 OL3 PDR TB1-5 TB3-9 CC5 CMT CC4 TB3-10 TB1-9 SD2 RCMS CC3 TB1-6 TB3-2 OPEN 20 CLOSE 35 LP TB3-3 TB1-18 OPEN 425 CLOSE 320 HP TB3-1 TB1-16 CC2 PDR TB1-17 TB3-6 CC1 TS AUTO MAN TB3-4 TB3-5

RCMS TB2-6 TB2-5 OHC1 TB2-3 OHC2 TB2-1 FH1 TB1-21 FH2 TB1-19 FH3 TB1-20 (SEE NOTE 3)

RCMS LOR TB1-22 SD3 LOR CI RI DI SD SD4 LV SD5 PDR TDR PDR TB2-2 CA C501

SD6 OHC1 TB1-11 SD7 OHC2 TB1-12 COHC1 SD8 BFMS OL1 TB1-13 CBFL CBFL1 EMG. SW. (NOT USED ON ALL CARS) COHC2

SD9 MV CMPS1 TB3-7 MPS OPEN 390 CLOSE 330 TB3-8 CMPS

SD10 FH1 CFH1 TB1-14

SD11 FH2 TB1-15 CFH2

SD12 FH3 (SEE NOTE 3) TB1-4 CFH3

HEPS OPEN 350 CLOSE 275 TB3-11 CHEPS

TB3-12 CDP

MPSA OPEN 230 CLOSE 175 TB3-4 NOT WIRED ON H.E.P. TB3-8

P R M C501 A B D G F N J Y B K C H TEMPERATURE CONTROLS (SEE NOTE 6)

TCB1 AFS CAFS CAFS-2 TB1-7 BFMS CAFS-1 TB1-8 CAFS-3 BFMS TB2-4

TLB PHT 200°F STI

TLC

BFB* BFMS OL1 IL1 IL2 IL3 IT1 (2.05A) IT2 IT3 M BLOWER FAN MOTOR

RCMB* RCMS OL2 2L1 2L2 2L3 A B C 2T1 2T2 2T3 M L COMPRESSOR MOTOR

OL3 3T1 (3.70 A) 3T2 3T3 M CONDENSER FAN MOTOR

OHB* 3L1 3L2 3L3 4T1 4T2 4T3 OHC1 8KW OVERHEAD HEAT 1ST STAGE

5T1 5T2 5T3 OHC2 12 KW OVERHEAD HEAT 2ND STAGE

FHB1 4L1 4L2 4L3 6T1 6T2 6T3 FH1 18 KW FLOOR HEAT 1ST STAGE

FHB2 5L1 5L2 5L3 7T1 7T2 7T3 FH2 18 KW FLOOR HEAT 2ND STAGE

FHB3 6L1 6L2 6L3 8T1 8T2 8T3 FH3 (SEE NOTE 3) 6 KW FLOOR HEAT 3RD STAGE

NOTES:

1. O TERMINAL ON STARTER PANEL.
2. □ TERMINAL ON TEMPERATURE CONTROL.
3. ◉ USED ON MAIN DINER PANEL ONLY.
4. △ TERMINAL ON CONTROL BOX.
5. ◇ THERMOSTAT TERMINAL
6. SEE APPROPRIATE TEMP. CONTROL SCHEM. FOR DESIGNATION.

* LOW LEVEL H.E.P CONVERSIONS

QTY/CAR	USED ON
D-00-699	H.E.P. CARS *

REFERENCE DRAWINGS:
E-01-767 TO E-01-772
E-01-779, E-01-1700

EQUIPMENT ENGINEERING
Amtrak
National Railroad Passenger Corporation

TITLE: ELECTRICAL SCHEMATIC DIAGRAM SAFETY OR TRANE 8 TON SYSTEM WITH CARRIER COMPRESSOR

DRAWN 3/16/81 B. Brown | CHECKED 3/16/81 RFBRUSS | APPROVED | APPROVED C.C. Baker 3/16/81

SCALE NONE | DRAWING NO. D-01-700 | REV B

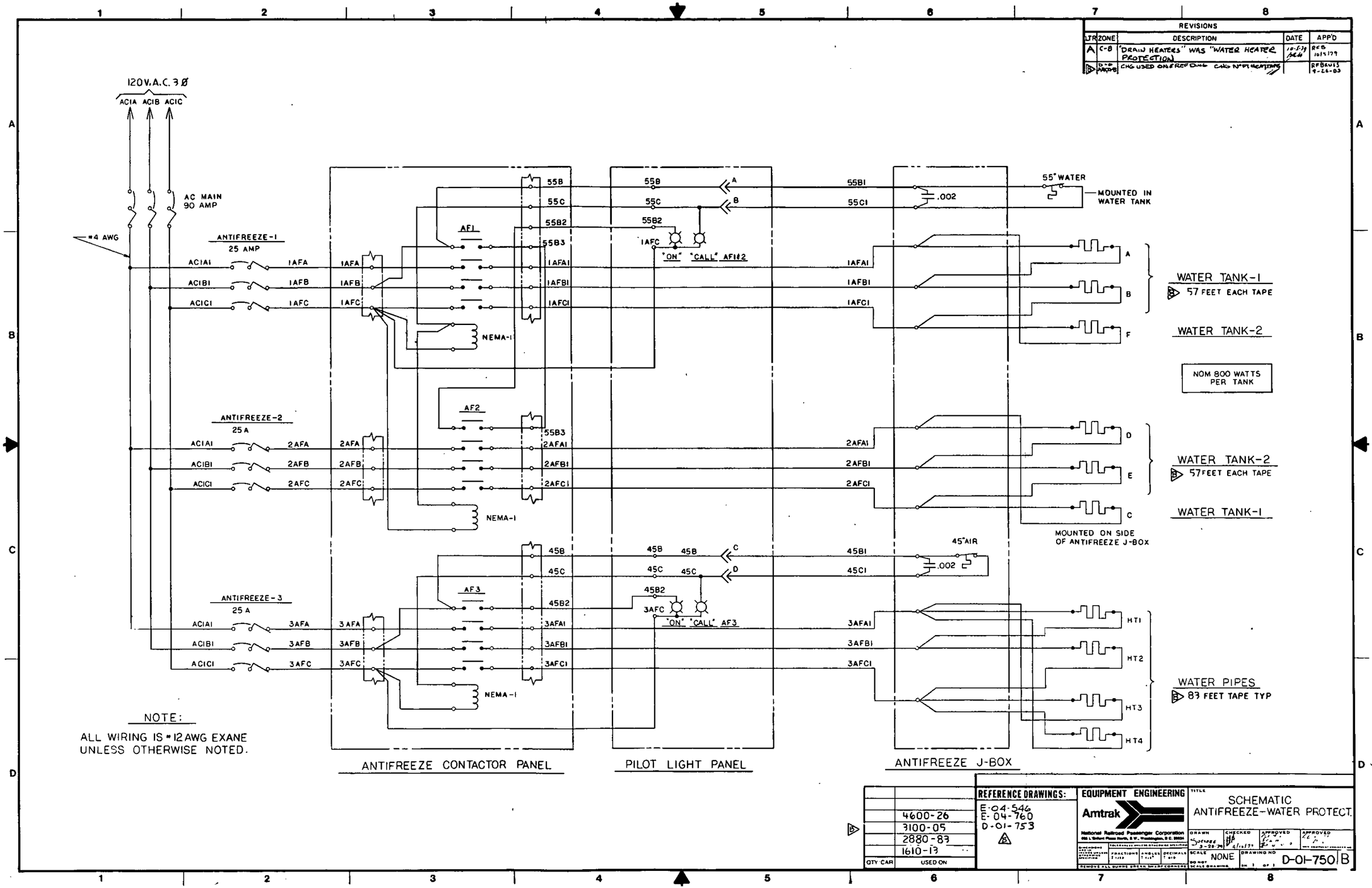

REVISIONS
LTR ZONE DESCRIPTION DATE APP'D
A C-8 "DRAIN HEATERS" WAS "WATER HEATER PROTECTION"
CHG USED ON & REF DWG
120V.A.C. 3Ø
ACIA ACIB ACIC
AC MAIN 90 AMP
#4 AWG
ANTIFREEZE-1
25 AMP
ACIAI ACIBI ACICI
1AFA 1AFB 1AFC
AF1
NEMA-1
55B 55C 55B2 55B3
1AFAI 1AFBI 1AFCI
55B 55C 55B2 1AFC
"ON" "CALL" AF1&2
55BI 55CI
.002
55° WATER
MOUNTED IN WATER TANK
WATER TANK-1
57 FEET EACH TAPE
WATER TANK-2
NOM 800 WATTS PER TANK
ANTIFREEZE-2
25 A
2AFA 2AFB 2AFC
AF2
2AFAI 2AFBI 2AFCI
WATER TANK-2
57 FEET EACH TAPE
WATER TANK-1
MOUNTED ON SIDE OF ANTIFREEZE J-BOX
45B 45C 45B2
45B 45C 45B2 3AFC
"ON" "CALL" AF3
45BI 45CI
45° AIR
.002
ANTIFREEZE-3
25 A
3AFA 3AFB 3AFC
AF3
3AFAI 3AFBI 3AFCI
HT1 HT2 HT3 HT4
WATER PIPES
83 FEET TAPE TYP
NOTE:
ALL WIRING IS #12 AWG EXANE UNLESS OTHERWISE NOTED.
ANTIFREEZE CONTACTOR PANEL
PILOT LIGHT PANEL
ANTIFREEZE J-BOX
4600-26
3100-05
2880-83
1610-13
QTY CAR USED ON
REFERENCE DRAWINGS:
E-04-546
E-04-760
D-01-753
EQUIPMENT ENGINEERING
Amtrak
National Railroad Passenger Corporation
SCHEMATIC
ANTIFREEZE-WATER PROTECT.
NONE
D-01-750 B

REVISIONS				
LTR	ZONE	DESCRIPTION	DATE	APPD
A		ADDED NEW CAR SERIES TO USED ON BLOCK.	3/4/77 MDD	R.P.GE-11 3/4/77

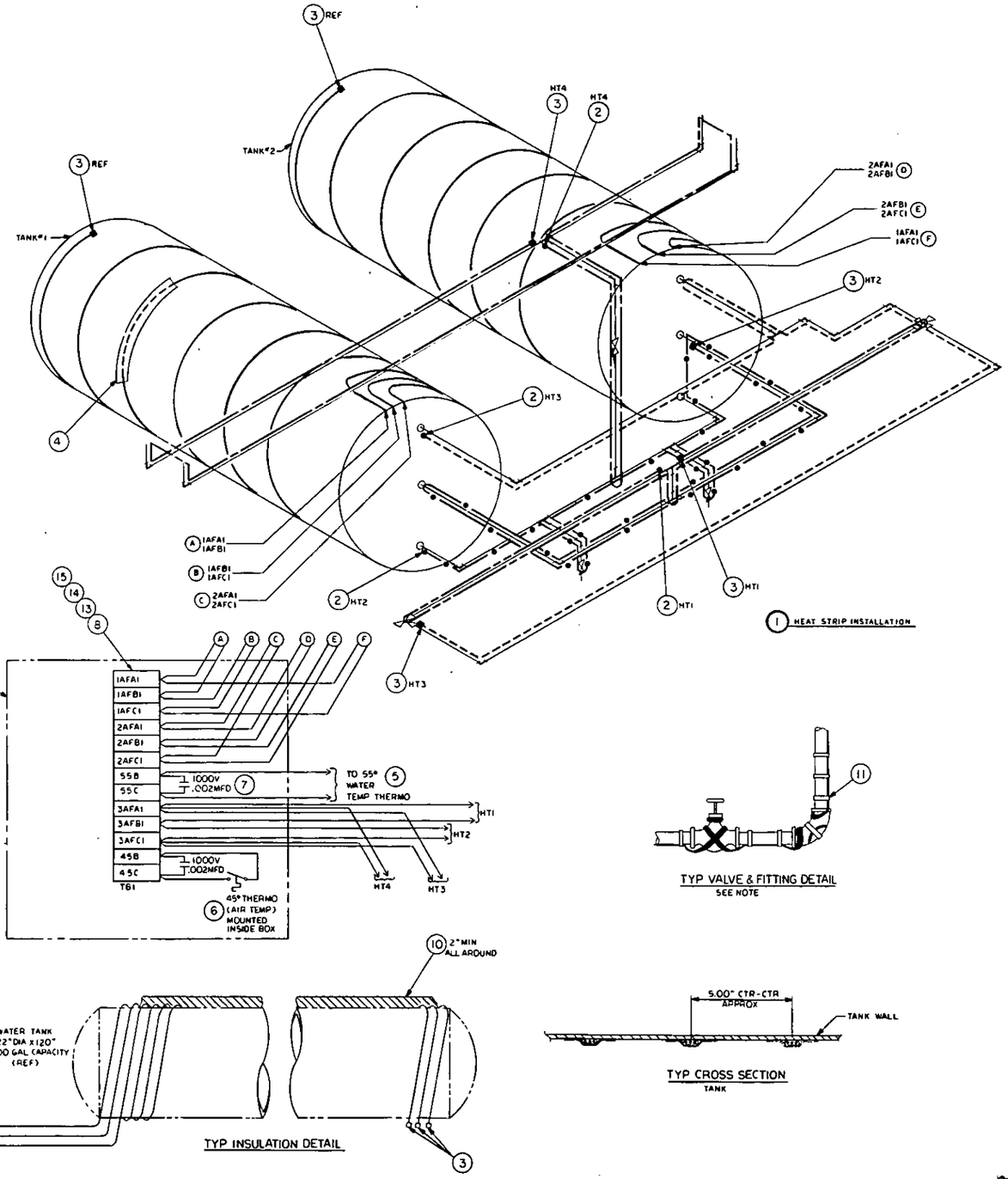

HEAT TRACING INSTALLATION INSTRUCTIONS

1. WATER STORAGE TANKS:
   - A. PREPARE THREE 57 FT. LENGTHS OF THERMO-LIMIT FOR EACH TANK BY CONNECTING POWER FEED WIRES TO HEATER STRIPS WITH RCT-1 KITS. FEED WIRES MUST BE LONG ENOUGH TO REACH FROM THE POWER SUPPLY PANEL TO 2 FT. PAST THE CONDUIT EXIT POINT. APPLY END SEALS FROM KITS.
   - B. ENSURE THE TANK IS CLEAN AND DRY. SECURE EACH OF THE THREE STRIPS TO THE UPPER AIR LINE ADJACENT TO THE TANK, AT A POINT ON THE HEATER STRIP 3 FT. FROM THE FEED WIRE CONNECTION.
   - C. SPIRAL WRAP EACH HEATER AROUND THE TANK WITH APPROXIMATELY 16 INCHES BETWEEN ADJACENT WRAPS, SO THAT WHEN ALL THREE HEATERS ARE IN PLACE THE SPACING BETWEEN ADJACENT STRIPS IS ABOUT 5 INCHES. SECURE THE HEATER TO THE TANK WITH AT-150 ALUMINUM TAPE, EXCEPT WHERE THE TANK IS COVERED BY FIBERGLASS INSULATION AT THE TOP.
2. AIR AND WATER LINES:
   - A. PREPARE FOUR LENGTHS OF THERMO-LIMIT FOR CIRCUITS HT-1 THROUGH HT-4, AS EXPLAINED ABOVE.
   - B. TANK AND HEAT TRACE TAPE TO BE INSULATED AFTER TEST OF HEAT TAPES, USING ITEM 10, MIN. OF 2" THICK
   - C. INSTALL EACH HEATER AS SHOWN ON THE LAYOUT (NOT TO SCALE), SECURING THE STRIP TO THE PIPE AT 1 FT. INTERVALS WITH TIE-WRAPS, LOOP THE HEATER AROUND ELBOWS AND VALVES AS SHOWN IN DETAIL A, TO ALLOW FOR EASY REMOVAL OF THESE PARTS IN THE FUTURE
3. WATER FILL VALVES AND LINES
   - A. FILL VALVE BODIES SHALL BE MOUNTED ON "STANDOFFS" TO MINIMIZE HEAT LOSSES AS MUCH AS POSSIBLE
   - B. ALL VALVES SHALL BE REMOVABLE WITHOUT REMOVING OR DISCONNECTING HEAT TAPES
   - C. APPLY HEAT TAPE TO ASSURE AUTOMATIC DRAIN VALVES AT LEAST TWO (2) TURNS. (TO AID IN FILLING WITH COLD WATER, ETC.)
   - D. VALVE BODIES SHALL HAVE TWO (2) LOOPS APPLIED. HEAT TAPE SHALL NOT INTERFERE WITH VALVE REMOVAL. MAKE AT LEAST 3" FREE HANGING LOOP AT EACH ELBOW. REFER TO CHROMALOX RAYCHEM INSTRUCTIONS MANUAL.
   - E. MAKE AT LEAST FOUR (4) WRAPS OF HEAT TAPE AROUND THE FILL VALVE BODIES. INSULATE ALL PIPING & VALVES AFTER TESTING. MINIMUM OF 1" FOR PIPING AND 2" FOR VALVES.
   - F. HEAT TAPES SHALL BE CONTINUOUS AND NOT SPLICED.
   - G. INSULATE ALL PIPING AND VALVES AFTER TESTING. MINIMUM OF 3/4" FIBERGLASS INSULATION, ITEM 10.
4. POWER FEED WIRE ROUTING:
   - A. COLLECT ALL FEED WIRES TOGETHER AT THE HEATER JUNCTION, AND SECURELY BAND TO A FRAME STUD WITH A HEAVY-DUTY TIE-WRAP. PULL THE FEED WIRES THROUGH THE CONDUIT TO THE POWER DISTRIBUTION PANEL, LEAVING ENOUGH SLACK OUTSIDE THE CONDUIT TO FORM A DRIP LOOP.

QTY	AMTRAK P/N	DESCRIPTION	MFG/MAT'L	PART NO	ITEM
REF	D-01-750	ANTIFREEZE WATER PROTECT SCHEMATIC			16
1		MARKER STRIP	ALLEN-BRADLEY	1492-N2	15
1		TRACK, MOUNTING	ALLEN-BRADLEY	1492-N11	14
1		END SECTION	ALLEN-BRADLEY	1492-N16	13
270'		HEAT TRACING STRIP (TLT120BT)			12
AR	25-89005523	TIE WRAP			11
AR		INSULATION, FIBERGLASS			10
REF	D-00-747-1	JUNCTION BOX			9
14		TERMINAL SECTION	ALLEN-BRADLEY	1492-CD3130	8
2		CAPACITOR, CERAMIC DISC	SPRAGUE	56AD20	7
1		THERMOSTAT, OUTSIDE TEMP	FENWAL	80016-4	6
1		THERMOSTAT, WATER TANK	FENWAL	80016-4	5
270'		TAPE, ALUM (AT150)	RAYCHEM	77731	4
10		END SEAL (RCT-1 KIT)	RAYCHEM	75002	3
10		POWER FEEDWIRE CONNECTION	RAYCHEM	75002	2
X	-1	HEAT STRIP INSTALLATION			1

LIST OF MATERIAL

QTY/CAR	USED ON
8702-04	
8505-25	
3000-08	
4700-42	
4400-48	
3118-27	
3100-12	

QTY/CAR	USED ON
8600-08	
7020-29	
8880-82	
8880-83	
2980-97	
2871-79	
2457-78	
2080-97	
1626-57	
1610-21	

REFERENCE DRAWINGS:
D-01-801
D-01-804
D-01-805

EQUIPMENT ENGINEERING — Amtrak

TITLE: ANTI-FREEZE WATER-PROTECTION INSTALLATION

DRAWING NO E-04-760 A

REVISIONS				
LTR	ZONE	DESCRIPTION	DATE	APPD
A		ADDED NEW CAR SERIES TO USED ON BLOCK	4/24/89	EP 04-17 4/24/89

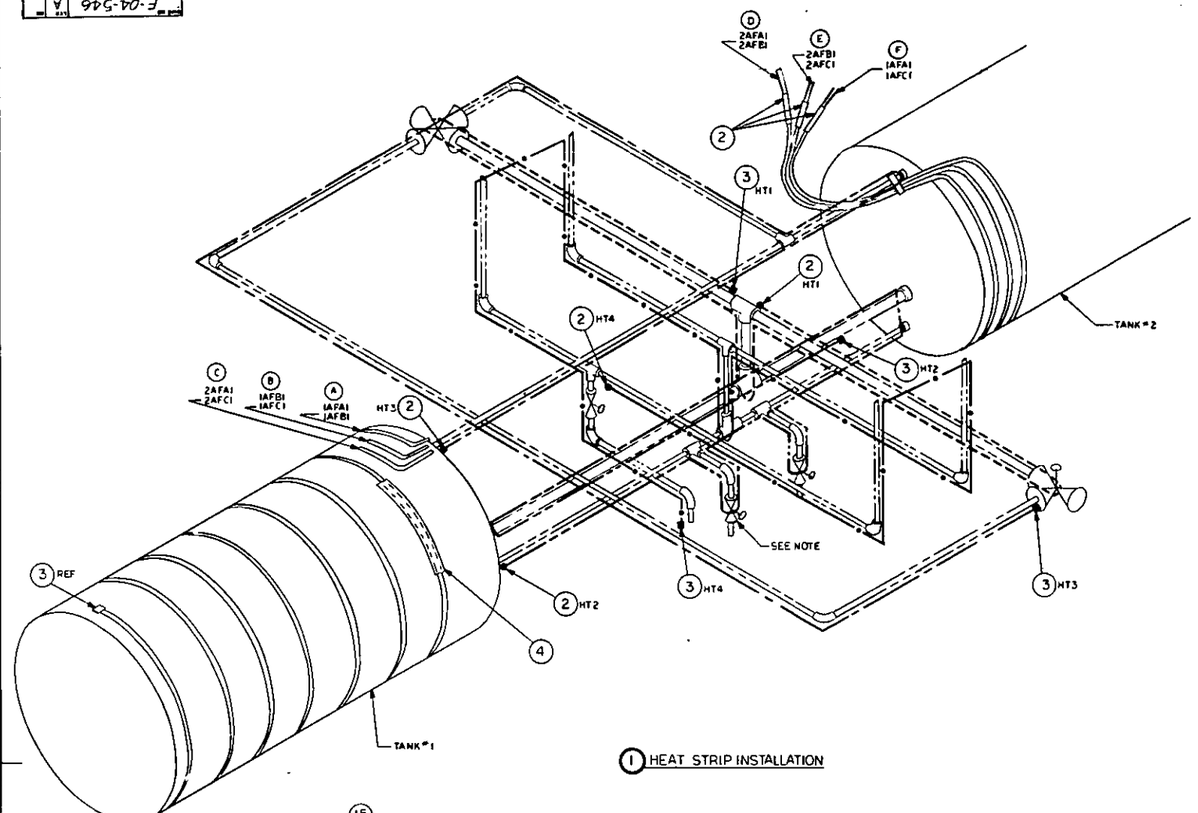

① HEAT STRIP INSTALLATION

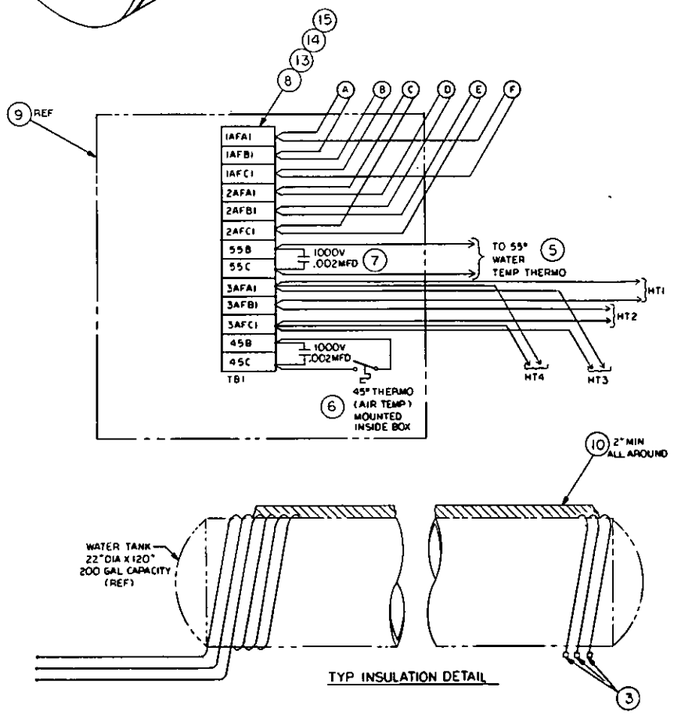

TYP INSULATION DETAIL

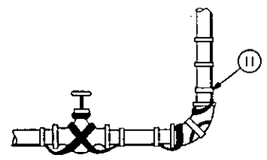

TYP VALVE & FITTING DETAIL
SEE NOTE

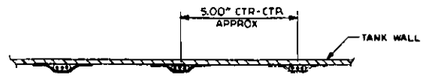

TYP CROSS SECTION
TANK

HEAT TRACING INSTALLATION INSTRUCTIONS

1. WATER STORAGE TANKS:
   - A. PREPARE THREE 57 FT. LENGTHS OF THERMO-LIMIT FOR EACH TANK BY CONNECTING POWER FEED WIRES TO HEATER STRIPS WITH RCT-1 KITS. FEED WIRES MUST BE LONG ENOUGH TO REACH FROM THE POWER SUPPLY PANEL TO 2 FT. PAST THE CONDUIT EXIT POINT. APPLY END SEALS FROM KITS.
   - B. ENSURE THE TANK IS CLEAN AND DRY. SECURE EACH OF THE THREE STRIPS TO THE UPPER AIR LINE ADJACENT TO THE TANK, AT A POINT ON THE HEATER STRIP 3 FT. FROM THE FEED WIRE CONNECTION.
   - C. SPIRAL WRAP EACH HEATER AROUND THE TANK WITH APPROXIMATELY 16 INCHES BETWEEN ADJACENT WRAPS, SO THAT WHEN ALL THREE HEATERS ARE IN PLACE THE SPACING BETWEEN ADJACENT STRIPS IS ABOUT 5 INCHES. SECURE THE HEATER TO THE TANK WITH AT-150 ALUMINUM TAPE, EXCEPT WHERE THE TANK IS COVERED BY FIBERGLASS INSULATION AT THE TOP.
2. AIR AND WATER LINES
   - A. PREPARE FOUR LENGTHS OF THERMO-LIMIT FOR CIRCUITS HT-1 THROUGH HT-4, AS EXPLAINED ABOVE.
   - B. TANK AND HEAT TRACE TAPE TO BE INSULATED AFTER TEST OF HEAT TAPES, USING ITEM 10, MIN. OF 2" THICK
   - C. INSTALL EACH HEATER AS SHOWN ON THE LAYOUT (NOT TO SCALE), SECURING THE STRIP TO THE PIPE AT 1 FT. INTERVALS WITH TIE-WRAPS, LOOP THE HEATER AROUND ELBOWS AND VALVES AS SHOWN IN DETAIL A, TO ALLOW FOR EASY REMOVAL OF THESE PARTS IN THE FUTURE
3. WATER FILL VALVES AND LINES:
   - A. FILL VALVE BODIES SHALL BE MOUNTED ON "STANDOFFS" TO MINIMIZE HEAT LOSSES AS MUCH AS POSSIBLE
   - B. ALL VALVES SHALL BE REMOVABLE WITHOUT REMOVING OR DISCONNECTING HEAT TAPES
   - C. APPLY HEAT TAPE TO OSGNTZ AUTOMATIC DRAIN VALVES AT LEAST TWO (2) TURNS. (TO AID IN FILLING WITH COLD WATER, ETC.)
   - D. VALVE BODIES SHALL HAVE TWO (2) LOOPS APPLIED. HEAT TAPE SHALL NOT INTERFERE WITH VALVE REMOVAL. MAKE AT LEAST 3" FREE MAINTENANCE LOOP AT EACH ELBOW. REFER TO CHEMLEX RAYCHEM INSTRUCTIONS MANUAL.
   - E. MAKE AT LEAST FOUR (4) WRAPS OF HEAT TAPE AROUND THE FILL VALVE BODIES. INSULATE ALL PIPING & VALVES AFTER TESTING. MINIMUM OF 1" FOR PIPING AND 2" FOR VALVES.
   - F. HEAT TAPES SHALL BE CONTINUOUS AND NOT SPLICED.
   - G. INSULATE ALL PIPING AND VALVES AFTER TESTING. MINIMUM OF 3/4" FIBERGLASS INSULATION, ITEM 10.
4. POWER FEED WIRE ROUTING:
   - A. COLLECT ALL FEED WIRES TOGETHER AT THE HEATER JUNCTION, AND SECURELY BAND TO A FRAME STUD WITH A HEAVY-DUTY TIE-WRAP. PULL THE FEED WIRES THROUGH THE CONDUIT TO THE POWER DISTRIBUTION PANEL, LEAVING ENOUGH SLACK OUTSIDE THE CONDUIT TO FORM A DRIP LOOP.

QTY/CAR	LOCO ON
7600-18	
7000-07	
8700-01	
8526-79	
8500-04	
4649-50	
4000-26	
3113-17	

QTY/CAR	LOCO ON
2900-41	
E850-94	
2474-78	
2430-56	
2050-56	
K22-25	

QTY	AMTRAK P/N	DESCRIPTION	MFG/MAT'L	PART NO.	ITEM
	-1	HEAT STRIP INSTALLATION			1
10		POWER FEEDWIRE CONNECTION	RAYCHEM	75002	2
10		END SEAL (RCT-1 KIT)	RAYCHEM	75002	3
270'		TAPE, ALUM (AT150)	RAYCHEM	77731	4
1		THERMOSTAT, WATER TANK	FENWAL	80016-4	5
1		THERMOSTAT, OUTSIDE TEMP	FENWAL	80016-4	6
2		CAPACITOR, CERAMIC DISC	SPRAGUE	5GAD20	7
14		TERMINAL SECTION	ALLEN-BRADLEY	1492-CD3130	8
REF	D-00-747-1	JUNCTION BOX			9
AR		INSULATION, FIBERGLASS			10
AR	25-8900552	TIE WRAP			11
470'		HEAT TRACING STRIP (TLT120BT)	RAYCHEM	75010	12
1		END SECTION	ALLEN-BRADLEY	1492-N16	13
1		TRACK, MOUNTING	ALLEN-BRADLEY	1492-N11	14
1		MARKER STRIP	ALLEN-BRADLEY	1492-N2	15
REF	D-01-750	ANTIFREEZE WATER PROTECT SCHEMATIC			16

LIST OF MATERIAL

REFERENCE DRAWINGS:
D-00-802
D-00-803
D-00-806

EQUIPMENT ENGINEERING
Amtrak

TITLE: ANTI-FREEZE WATER PROTECTION INSTALLATION

E-04-546 A

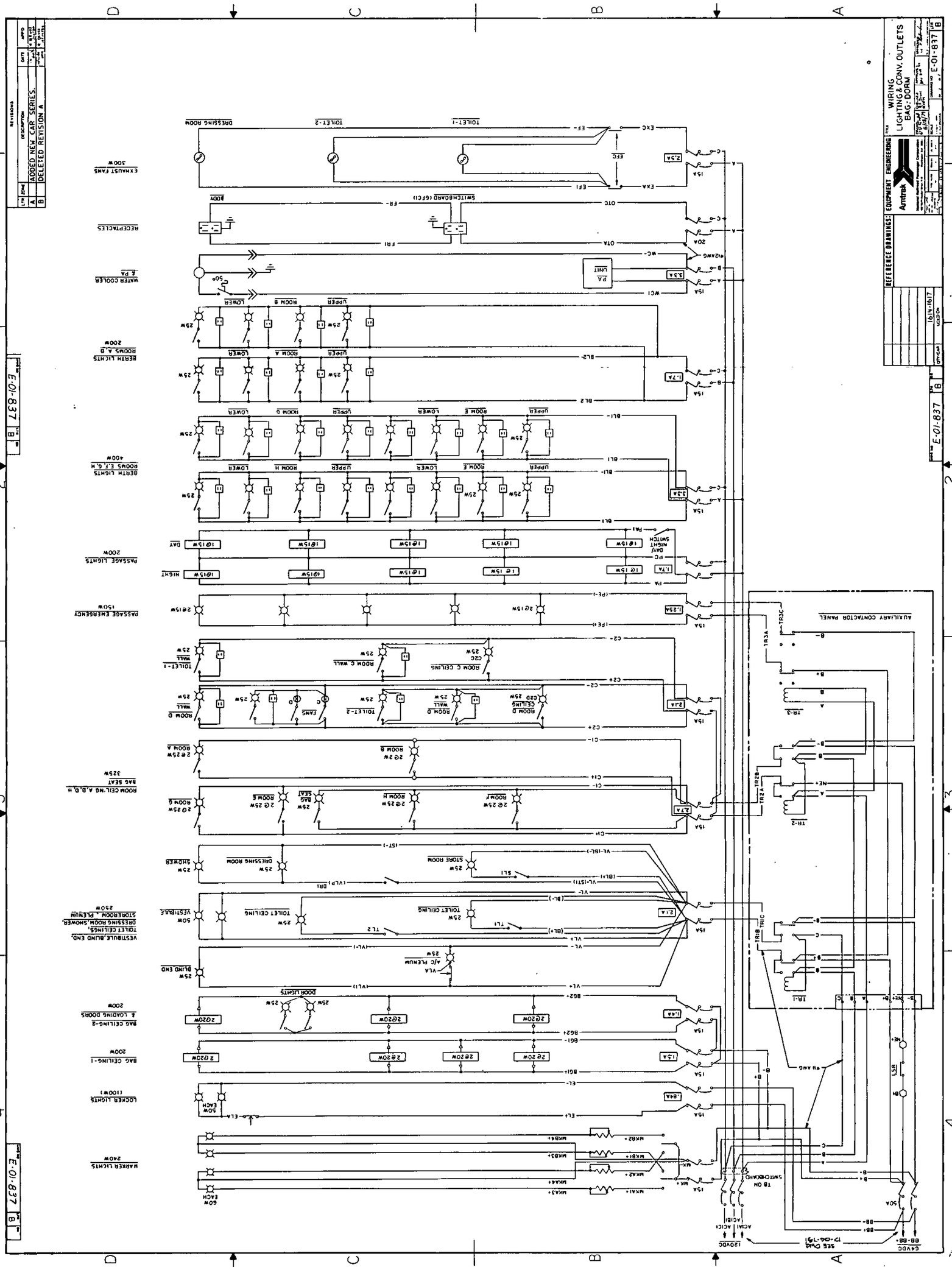
REVISIONS
DESCRIPTION
ADDED NEW CAR SERIES.
DELETED REVISION A
EQUIPMENT ENGINEERING
Amtrak
WIRING
LIGHTING & CONV. OUTLETS
BAG-DORM
E-01-837
REFERENCE DRAWINGS
EXHAUST FANS 500W
RECEPTACLES
WATER COOLER 1 PA
BEAM LIGHTS ROOMS A,B 200W
BEAM LIGHTS ROOMS E,F,G,H 400W
PASSAGE LIGHTS 200W
PASSAGE EMERGENCY 150W
ROOM CEILNG A,B,D,H BAG SEAT 325W
VESTIBULE,BLIND END, TOILET CEILINGS, DRESSING ROOM,SHOWER, STOREROOM, PLENUM 250W
BAG CEILING-2 & LOADING DOORS 200W
BAG CEILING-1 200W
LOCKER LIGHTS (100W)
MARKER LIGHTS 240W
AUXILIARY CONTACTOR PANEL
SWITCHBOARD
120VDC
64VDC
SEE DWG 17-04-791

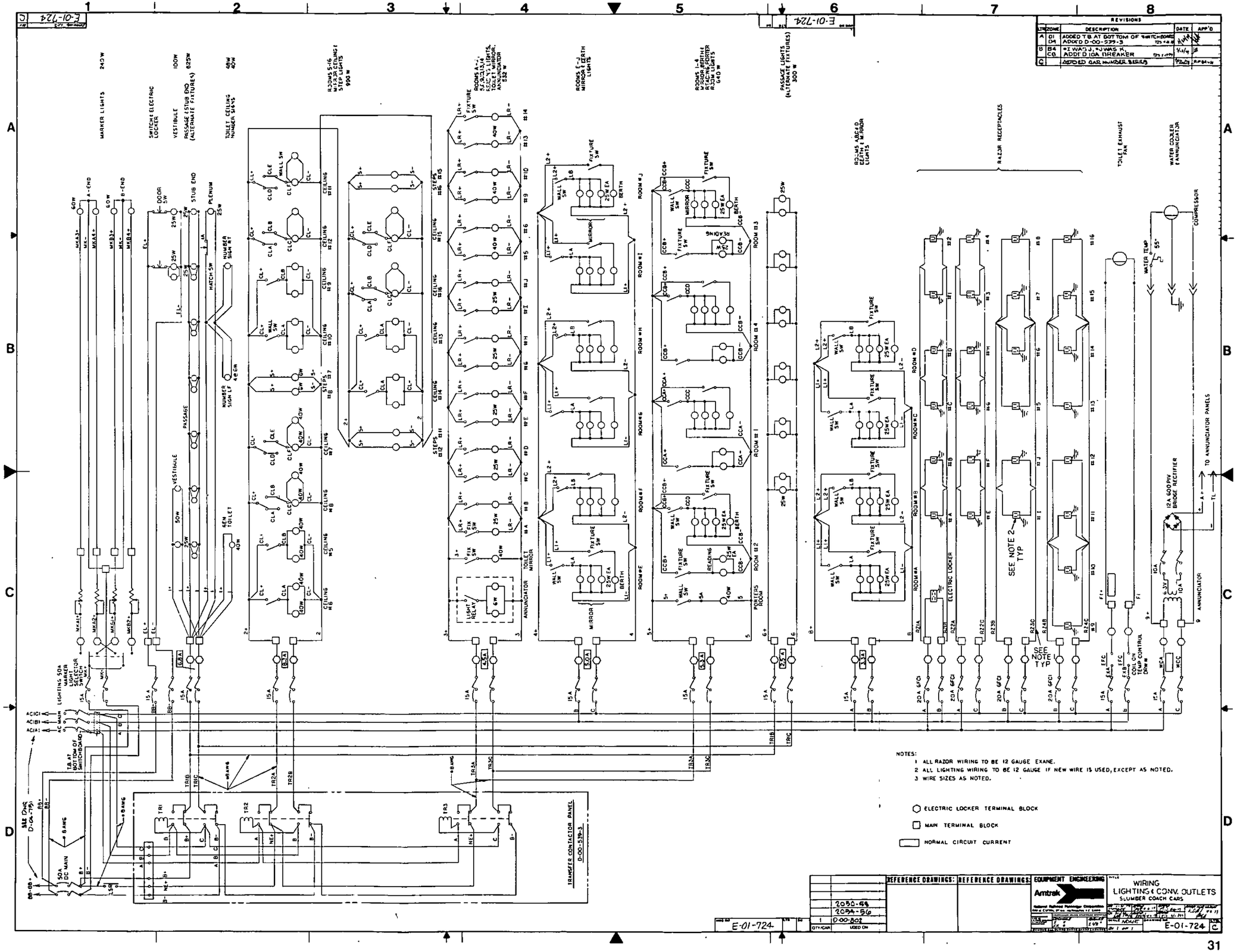

E-01-724
REVISIONS
A D1 D4 ADDED T.B. AT BOTTOM OF SWITCHBOARD ADDED D-00-539-3
B B4 C6 #1 WAS J, #J WAS K, ADDED 10A BREAKER
C ADDED CAR NUMBER SIGNS
MARKER LIGHTS 240 W
SWITCH ELECTRIC LOCKER
VESTIBULE 100W
PASSAGE (STUB END) (ALTERNATE FIXTURES) 625W
TOILET CEILING NUMBER SIGNS 40W
ROOMS 5-16 MIRROR CEILING & STEP LIGHTS 900 W
ROOMS A-, 5,6,9,10,13,14 ESC'Y LIGHTS, TOILET MIRROR, ANNUNCIATOR 532 W
ROOMS E-J MIRROR & BERTH LIGHTS
ROOMS 1-4 MIRROR, BERTH & READING PORTER ROOM LIGHTS 640 W
PASSAGE LIGHTS (ALTERNATE FIXTURES) 300 W
ROOMS A,B,C,D BERTH & MIRROR LIGHTS
RAZOR RECEPTACLES
TOILET EXHAUST FAN
WATER COOLER & ANNUNCIATOR
COMPRESSOR
WATER TEMP 55°
TO ANNUNCIATOR PANELS
12A 600 PIV BRIDGE RECTIFIER
SEE NOTE 2 TYP
SEE NOTE 1 TYP
ELECTRIC LOCKER
ANNUNCIATOR
TRANSFER CONTACTOR PANEL D-00-539-3
LIGHTING 50A MARKER LIGHT SELECTOR SWITCH
50A DC MAIN
T.B. AT BOTTOM OF SWITCHBOARD
NOTES:
1 ALL RAZOR WIRING TO BE 12 GAUGE EXANE.
2 ALL LIGHTING WIRING TO BE 12 GAUGE IF NEW WIRE IS USED, EXCEPT AS NOTED.
3 WIRE SIZES AS NOTED.
ELECTRIC LOCKER TERMINAL BLOCK
MAIN TERMINAL BLOCK
NORMAL CIRCUIT CURRENT
REFERENCE DRAWINGS:
REFERENCE DRAWINGS:
EQUIPMENT ENGINEERING
Amtrak
WIRING
LIGHTING & CONV. OUTLETS
SLUMBER COACH CARS
2050-58
2054-56
1 D-00-802
QTY/CAR USED ON
E-01-724

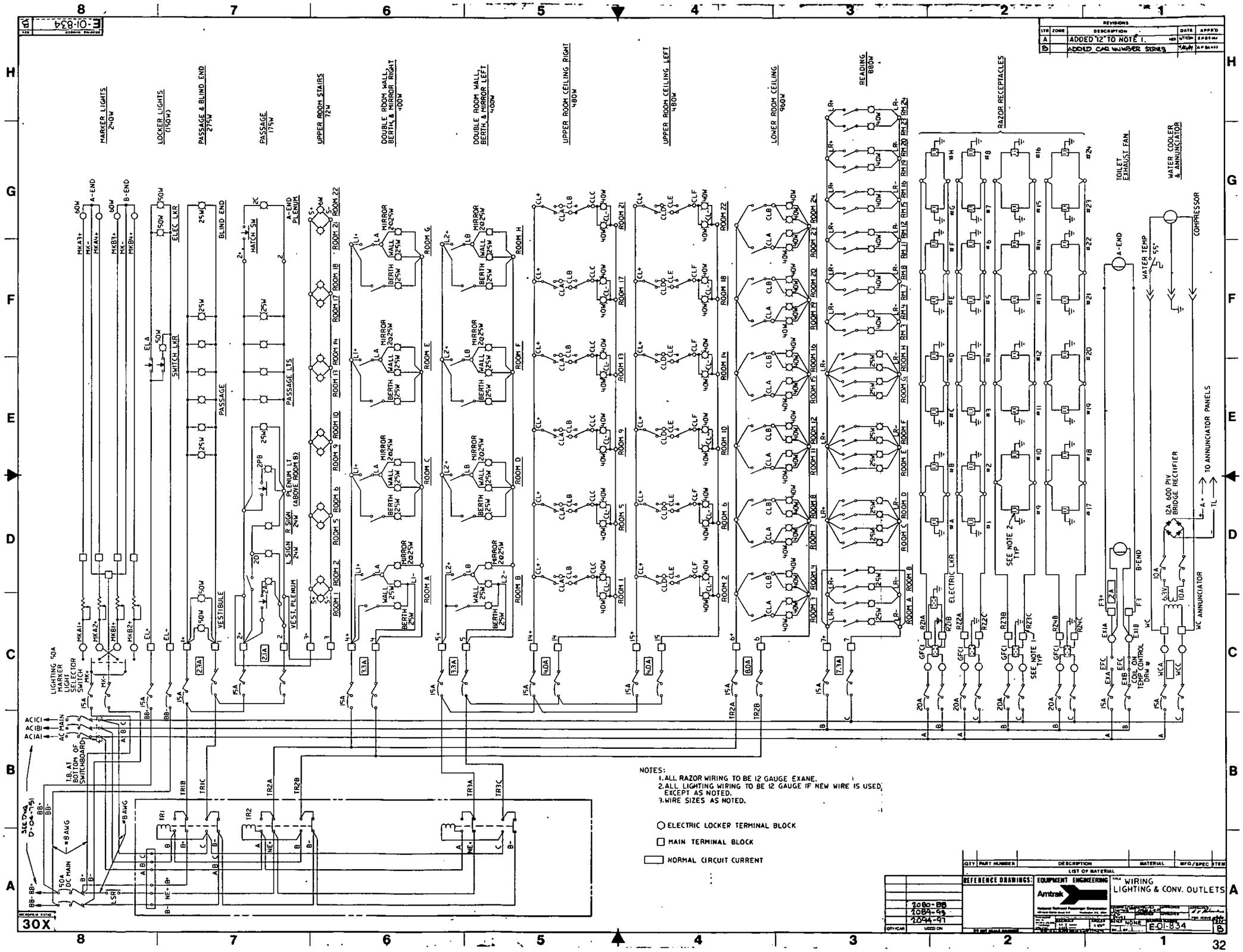

NOTES:
1. ALL RAZOR WIRING TO BE 12 GAUGE EXANE.
2. ALL LIGHTING WIRING TO BE 12 GAUGE IF NEW WIRE IS USED, EXCEPT AS NOTED.
3. WIRE SIZES AS NOTED.

○ ELECTRIC LOCKER TERMINAL BLOCK
□ MAIN TERMINAL BLOCK
▭ NORMAL CIRCUIT CURRENT

REVISIONS				
LTR	ZONE	DESCRIPTION	DATE	APPR'D
A		ADDED "12" TO NOTE 1.		
B		ADDED CAR NUMBER STRIPS		

QTY	PART NUMBER	DESCRIPTION	MATERIAL	MFG/SPEC	ITEM

LIST OF MATERIAL

REFERENCE DRAWINGS:

QTY/CAR	USED ON
	2080-88
	2089-93
	2094-97

EQUIPMENT ENGINEERING
Amtrak
National Railroad Passenger Corporation

TITLE: WIRING LIGHTING & CONV. OUTLETS

SCALE: NONE
E-01-834
B

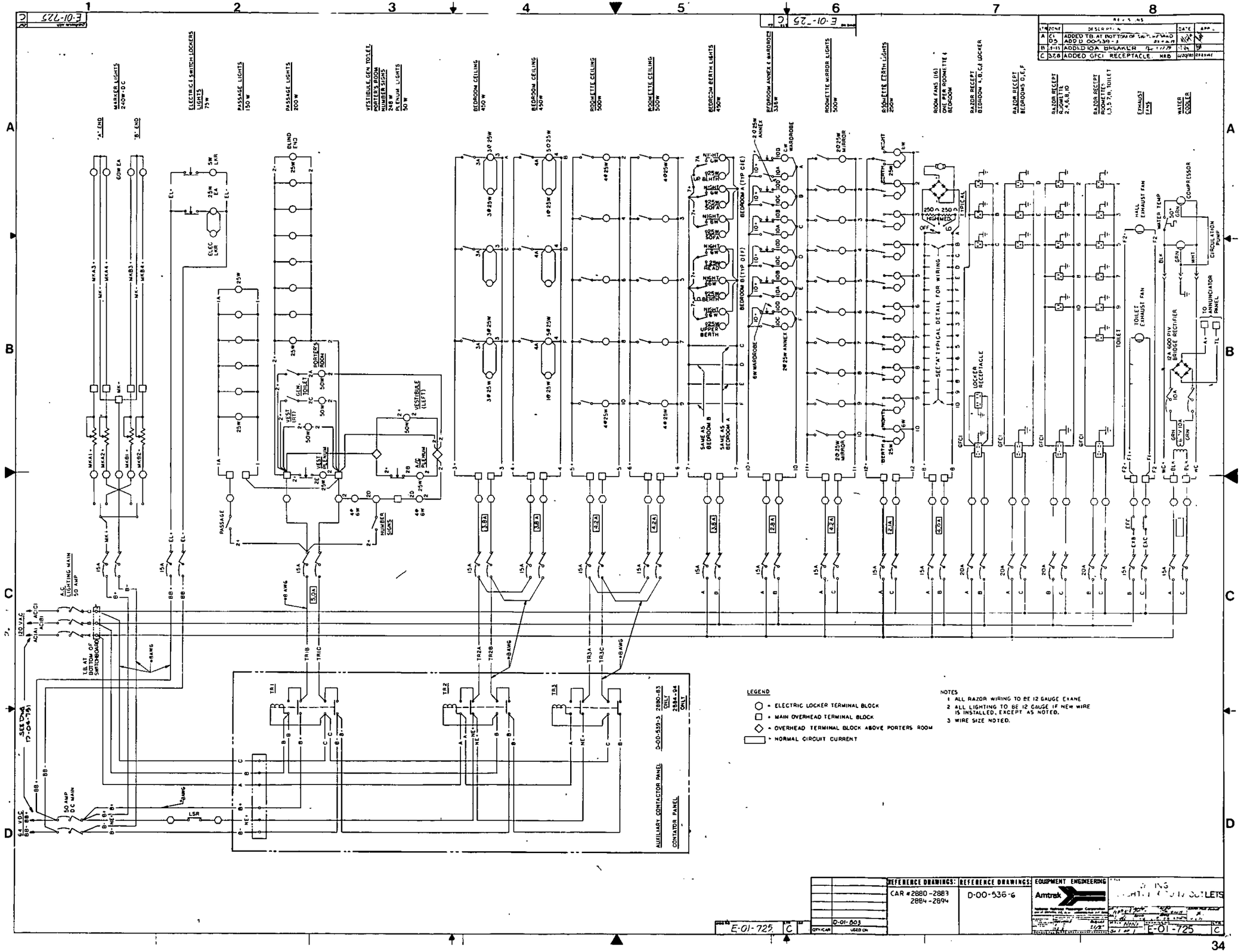

MARKER LIGHTS 240W-DC
ELECTRIC & SWITCH LOCKERS LIGHTS 75W
PASSAGE LIGHTS 150W
PASSAGE LIGHTS 200W
VESTIBULE, GEN TOILET, PORTER'S ROOM NUMBER SIGNS 248W
PLENUM LIGHTS 50W
BEDROOM CEILING 450W
BEDROOM CEILING 450W
ROOMETTE CEILING 500W
ROOMETTE CEILING 500W
BEDROOM BERTH LIGHTS 450W
BEDROOM ANNEX & WARDROBE 336W
ROOMETTE MIRROR LIGHTS 500W
ROOMETTE BERTH LIGHTS 250W
ROOM FANS (16) ONE PER ROOMETTE & BEDROOM
RAZOR RECEPT BEDROOM A, B, C, & LOCKER
RAZOR RECEPT BEDROOMS D, E, F
RAZOR RECEPT ROOMETTE 2, 4, 6, 8, 10
RAZOR RECEPT ROOMETTES 1, 3, 5, 7, 8, TOILET
EXHAUST FANS
WATER COOLER
A.C. LIGHTING MAIN 50 AMP
120 VAC
64 VDC
50 AMP DC MAIN
AUXILIARY CONTACTOR PANEL
CONTATOR PANEL
D-00-539-3 2880-83 ONLY
2884-94 ONLY
LEGEND
○ = ELECTRIC LOCKER TERMINAL BLOCK
□ = MAIN OVERHEAD TERMINAL BLOCK
◇ = OVERHEAD TERMINAL BLOCK ABOVE PORTERS ROOM
▭ = NORMAL CIRCUIT CURRENT
NOTES
1 ALL RAZOR WIRING TO BE 12 GAUGE EXANE
2 ALL LIGHTING TO BE 12 GAUGE IF NEW WIRE IS INSTALLED, EXCEPT AS NOTED.
3 WIRE SIZE NOTED.
REFERENCE DRAWINGS: CAR #2880-2883 2884-2894
REFERENCE DRAWINGS: D-00-536-6
EQUIPMENT ENGINEERING
Amtrak
E-01-725
C

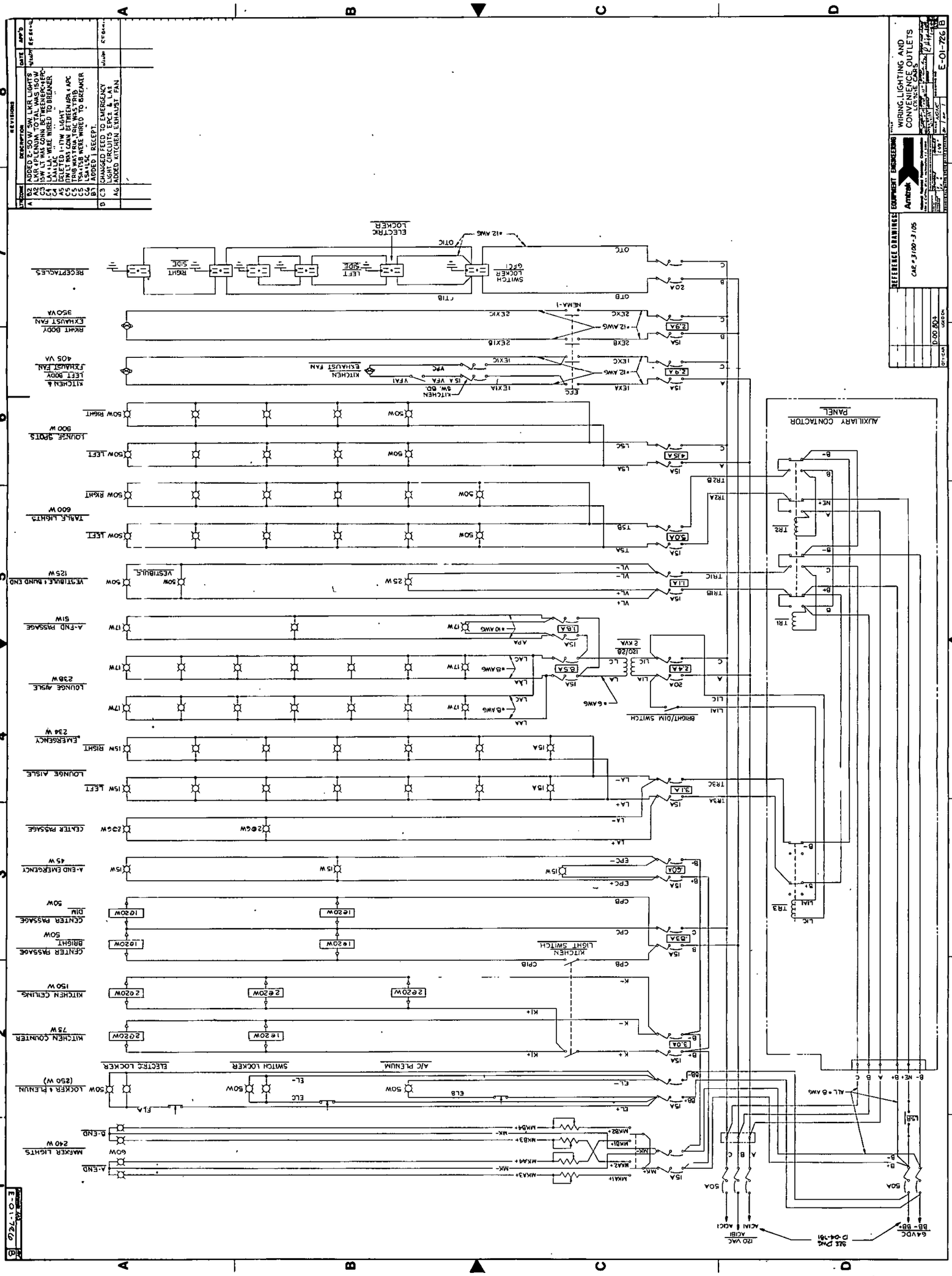
WIRING, LIGHTING AND CONVENIENCE OUTLETS
E-01-726
REFERENCE DRAWINGS
EQUIPMENT ENGINEERING
Amtrak
CAR #3100-3105
REVISIONS
DESCRIPTION
DATE
APP'D
ADDED 2 SCENIC VIEW LVR LIGHTS (NOW 10 EACH TOTAL) WIRED TO SW
DSW LT WAS GOING BETWEEN PC+1 PC
LA1-1, LA1-2 WERE WIRED TO BREAKER
DELETED 1-ITW LIGHT
ITW LT WAS GOING BETWEEN PC+1 & PC
ITSA+1SB WERE WIRED TO BREAKER
1SA+1SC
ADDED 1 FEED TO EMERGENCY LIGHT CIRCUITS 1 PC+ & LA1
ADDED KITCHEN EXHAUST FAN
RECEPTACLES
RIGHT SIDE
LEFT SIDE
ELECTRIC LOCKER
SWITCH LOCKER OFF
#12 AWG
OTC
OTB
20A
RIGHT BODY EXHAUST FAN 350 VA
NEMA-1
2EXC
2EXB
2.9A
LEFT BODY EXHAUST FAN 405 VA
KITCHEN EXHAUST FAN
1EXC
1EXA
2.9A
KITCHEN SW. 60.
15A VFA
VFA
VFA1
EFC
15A
LOUNGE SPOTS 900 W
50W RIGHT
50W LEFT
TA9-F LIGHTS 600 W
VESTIBULE 1 HAND END 125 W
VESTIBULE
A-END PASSAGE 51W
17W
LOUNGE AISLE 238 W
EMERGENCY 234 W
RIGHT
LEFT
LOUNGE AISLE
CENTER PASSAGE
236W
A-END EMERGENCY 45 W
15W
CENTER PASSAGE DIM 50W
CENTER PASSAGE BRIGHT 50W
KITCHEN CEILING 150 W
KITCHEN COUNTER 75 W
LOCKER & PLENUM (250 W)
ELECTRIC LOCKER
SWITCH LOCKER
A/C PLENUM
50W
B-END
A-END
MARKER LIGHTS 240 W
60W
AUXILIARY CONTACTOR PANEL
TR2B
TR2A
TR2
TR1C
TR1B
TR1
TR3A
TR3
BRIGHT/DIM SWITCH
120/28 2 KVA
KITCHEN LIGHT SWITCH
ALL #8 AWG
50A
120 VAC
64 VDC
SEE DWG D-04-781
B- NE+ B+ A B C
A B C
B- B+
ACI1
ACI2
ACN1
ACN2

E-01-835

REVISIONS

LTR/ZONE	DESCRIPTION	DATE	APP'D

MARKER LIGHTS 240 W — A-END 60W — B-END

LOCKER & PLENUM (216 W) — ELB 50W — STORAGE LOCKERS — ELC — SWITCH LOCKER — ELECTRIC LKR — ELA 50W

KITCHEN COUNTER 75 W — 2@20W — 1@20W

KITCHEN CEILING 150 W — 2@20W — 2@20W — 2@20W

CENTER PASSAGE BRIGHT 50W — 1@20W — 1@20W

CENTER PASSAGE D.M. 50W — 1@20W — 1@20W

CENTER PASSAGE EMERGENCY 24 W — 2@6W

LOUNGE AISLE EMERGENCY 270W — 15W LEFT — 15W RIGHT

LOUNGE AISLE — 60W LEFT 540W — 60W RIGHT 540W

PASSAGE & BLIND END 150W — 25W — A-BLIND END — A-END-PASSAGE — 25W — B-BLIND END

TABLE SPOTS 600 W — 50W LEFT — 50W RIGHT

LOUNGE 546 VA — 15W — LOUNGE COVE

KITCHEN & RIGHT BODY EXHAUST FAN 405 VA — KITCHEN EXHAUST FAN

LEFT BODY EXHAUST FAN 350 VA

RECEPTACLES — RIGHT SIDE — LEFT SIDE — ELECTRIC LOCKER

LOUNGE SPOT — 50W — 50W

KITCHEN LIGHT SWITCH

BRIGHT-DIM SWITCH

KITCHEN SW. BD. — 15 A VFA — VFAI — VFC — IEXIA — IEXIC — 2EXIB — 2EXIC — NEMA-1 — SWITCH LOCKER GFCI — 12 AWG — OTB — OTIC — CTIB

MK1A1+ MK1A2+ MK1B1+ MK1B2+ MK1A3+ MK1A4+ MK1B3+ MK1B4+ MK1- — MK+ — K1+ — K+ — K- — CPB — CPC — EPC+ — EPC- — LA+ — LA- — ILAA1 — ILAB — 2LAB1 — 2LAC — VL+ — VL- — MASSAGE — T5A — T5B — L5A — L5C — IEXIA — IEXIC — 2EXIB — 2EXIC — OTB — OTC

15A — 3.0A — 8.5A — 3A — 4.5A — 25A — 5.0A — 4.1A — 4.4A — 2.9A — 20A

120 VAC ACB1 ACIN — 50A — A B C — ACC1

64 VDC BB+ BB- — SEE DWG 12-104-1150 — 50A — B+ B- — L5B

ALL #8 AWG — B- NE- B+ A B C

TR3A TR3C TR2A TR2B TR1B TR1C

TR3 ILAA1 ILAB TR1 TR2 NE+

AUXILIARY CONTACTOR PANEL

REFERENCE DRAWINGS	EQUIPMENT ENGINEERING	TITLE
CAR # 3106-3112	Amtrak	WIRING, LIGHTING AND CONVENIENCE OUTLETS LOUNGE CARS
D-00 804 QTY/CAR: 1 USED ON	DRAWN	E-01-835

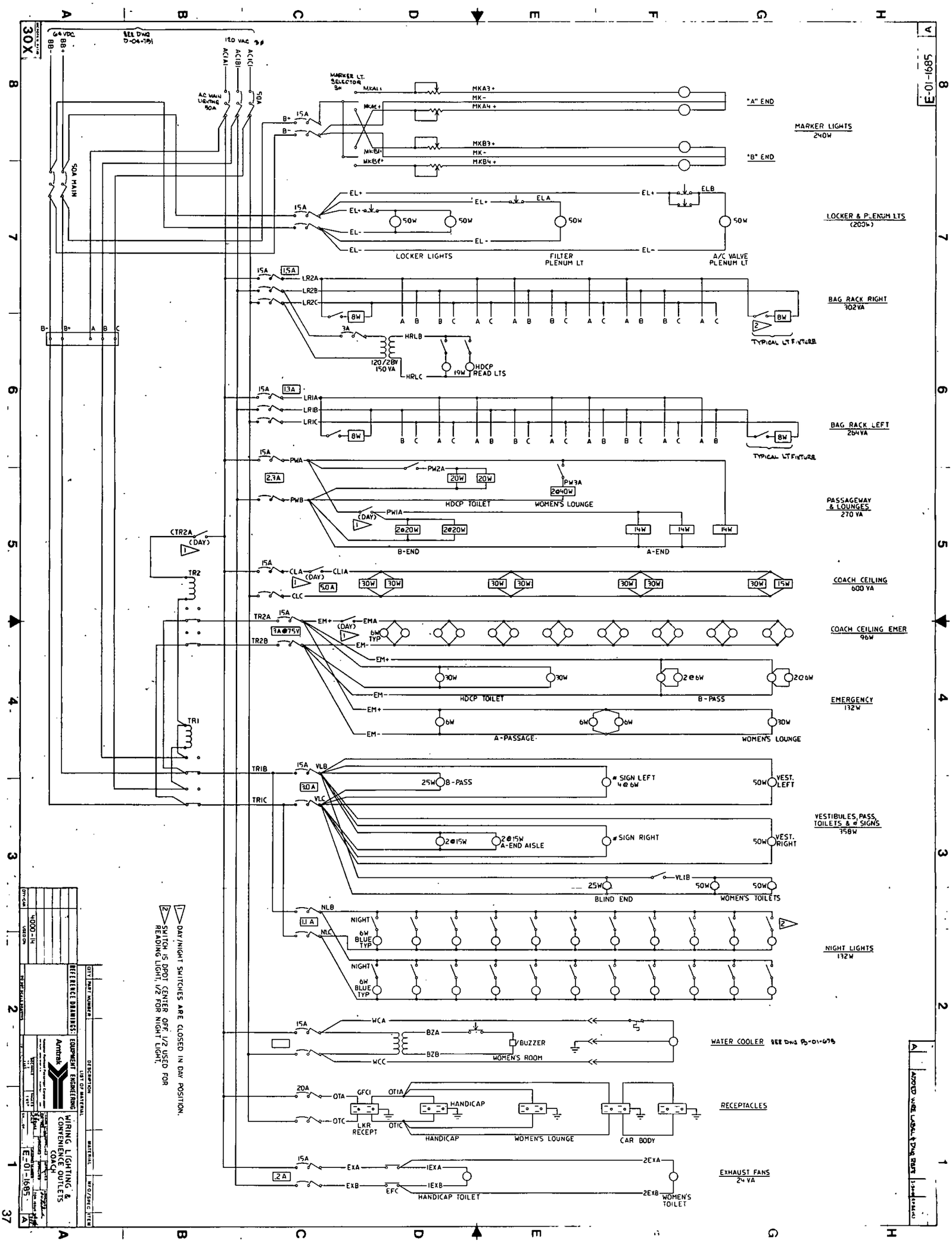

E-01-1685
MARKER LIGHTS 240W
"A" END
"B" END
LOCKER & PLENUM LTS (200W)
LOCKER LIGHTS
FILTER PLENUM LT
A/C VALVE PLENUM LT
BAG RACK RIGHT 302VA
TYPICAL LT FIXTURE
HDCP READ LTS
BAG RACK LEFT 264VA
PASSAGEWAY & LOUNGES 270 VA
HDCP TOILET
WOMEN'S LOUNGE
B-END
A-END
COACH CEILING 600 VA
COACH CEILING EMER 96W
EMERGENCY 132W
B-PASS
A-PASSAGE
VESTIBULES, PASS, TOILETS & # SIGNS 358W
SIGN LEFT 4@6W
SIGN RIGHT
A-END AISLE
BLIND END
WOMEN'S TOILETS
NIGHT LIGHTS 132W
WATER COOLER
BUZZER
WOMEN'S ROOM
RECEPTACLES
HANDICAP
LKR RECEPT
CAR BODY
EXHAUST FANS 24 VA
HANDICAP TOILET
WOMEN'S TOILET
DAY/NIGHT SWITCHES ARE CLOSED IN DAY POSITION.
SWITCH IS DPDT CENTER OFF. 1/2 USED FOR READING LIGHT, 1/2 FOR NIGHT LIGHT.
REFERENCE DRAWINGS:
EQUIPMENT ENGINEERING
WIRING LIGHTING & CONVENIENCE OUTLETS COACH
E-01-1685

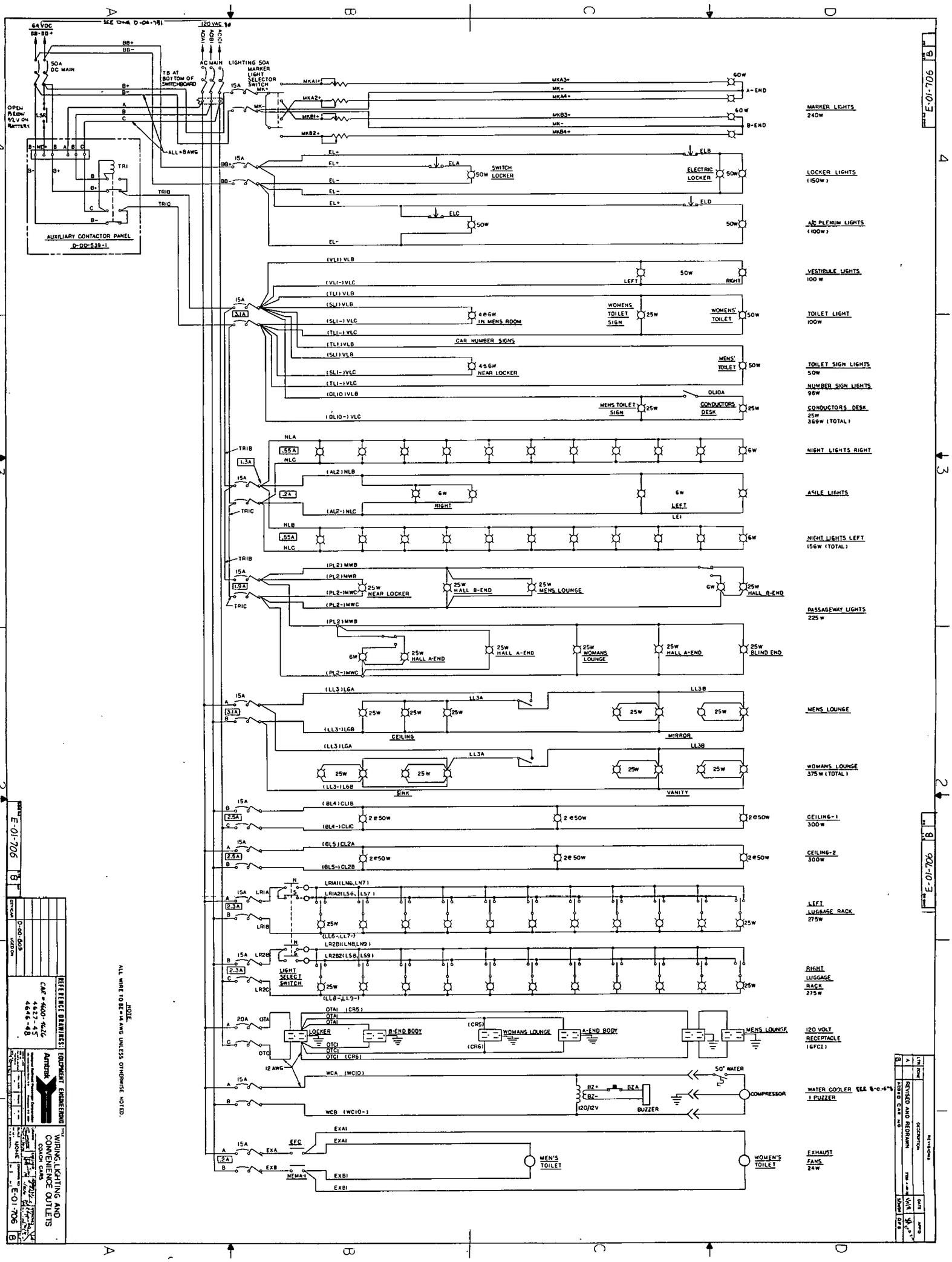

64 VDC
120 VAC
50A DC MAIN
TB AT BOTTOM OF SWITCHBOARD
AC MAIN
LIGHTING 50A
MARKER LIGHT SELECTOR SWITCH
OPEN BELOW 1/2V ON BATTERY
ALL=8AWG
AUXILIARY CONTACTOR PANEL
D-00-539-1
MARKER LIGHTS 240W
A-END
B-END
LOCKER LIGHTS (150W)
SWITCH LOCKER
ELECTRIC LOCKER
A/C PLENUM LIGHTS (100W)
VESTIBULE LIGHTS 100W
LEFT
RIGHT
TOILET LIGHT 100W
WOMENS TOILET SIGN
WOMENS' TOILET
IN MENS ROOM
CAR NUMBER SIGNS
TOILET SIGN LIGHTS 50W
MENS' TOILET
NEAR LOCKER
NUMBER SIGN LIGHTS 98W
CONDUCTORS DESK 25W 369W (TOTAL)
MENS TOILET SIGN
CONDUCTORS DESK
NIGHT LIGHTS RIGHT
ASILE LIGHTS
NIGHT LIGHTS LEFT 156W (TOTAL)
PASSAGEWAY LIGHTS 225W
NEAR LOCKER
HALL B-END
MENS LOUNGE
HALL A-END
WOMANS LOUNGE
BLIND END
MENS LOUNGE
CEILING
MIRROR
WOMANS LOUNGE 375W (TOTAL)
SINK
VANITY
CEILING-1 300W
CEILING-2 300W
LEFT LUGGAGE RACK 275W
RIGHT LUGGAGE RACK 275W
LIGHT SELECT SWITCH
120 VOLT RECEPTACLE (GFCI)
LOCKER
B-END BODY
WOMANS LOUNGE
A-END BODY
MENS LOUNGE
WATER COOLER 1 PUZZER
50° WATER
COMPRESSOR
BUZZER
120/12V
EXHAUST FANS 24W
MEN'S TOILET
WOMEN'S TOILET
NOTE
ALL WIRE TO BE=14 AWG UNLESS OTHERWISE NOTED.
REFERENCE DRAWINGS:
CAR #4600-4626
4627-45
4646-48
EQUIPMENT ENGINEERING
Amtrak
WIRING, LIGHTING AND CONVENIENCE OUTLETS
COACH CARS
E-01-706
REVISED AND REDRAWN

E-01-836 B

LTR	ZONE	DESCRIPTION	DATE	APP'D
A		ADDED NEW CAR SERIES. MG	4/25/90	EP 89-02
B		CORRECTED NIGHT LIGHT COLOR. ADDED DAY/NIGHT SW	7/27/90 MG	EP 89-02

MARKER LIGHTS 240W — "A" END — "B" END

CEILING 120W — 15W ×12 — LEFT BAG RACK LIGHTS (12) — RIGHT BAG RACK LIGHTS (12) — DAY/NIGHT SW — CLOSED IN DAY POSITION

BAG RACK 480W — 15W ×12

PASSAGE 80W — 15W ×2 — "B" END NO. 1 — "A" END NO. 1 — "B" END NO. 2 — "A" END NO. 2

VEST BULE TOILETS 300W — 50W ×2 — 25W ×5 — VESTIBULE — WOMEN'S TOILET — WOMEN'S LOUNGE — "B" END PASSAGE — LEFT MEN'S TOILET — RIGHT MEN'S TOILET — STUB END

NIGHT LIGHTS 60W — 6W CLEAR ×10 — SEAT PEDESTAL — "B" END NO. 1 — "B" END NO. 2 — "A" END NO. 1 — "A" END NO. 2

MEN'S & WOMEN'S LOUNGES 450W — 20-25W ×6 — WOMEN'S MIRROR — WALL SW — WOMEN'S LOUNGE CEILING — MEN'S LOUNGE MIRROR RIGHT — MEN'S LOUNGE MIRROR LEFT

48W — 4-6W-24W

90W — 6W ×15 — LEFT NO. SIGNS "B" END — CEILING

WATER COOLER SEE DWG 8-01-67 — 50°F — GRD — BUZZER — WOMEN'S ROOM

RECEPTACLES — WOMEN'S LOUNGE — MEN'S LOUNGE RIGHT — MEN'S LOUNGE LEFT — OTA — OTB — LKR RECEPT GROUND FAULT FEEDTHRU TYPE

WOMEN'S TOILET — LEFT MEN'S TOILET — IEXA — IEXB — EFA — EFB

MK A3+ MK A- MK A4+ — MK B3+ MK B- MK B4+ — WALTHAM LIGHT SWITCH

EL+ — EL- — LOCKER LIGHTS — ELA — ELB — "A" END PLENUM LT — "B" END PLENUM LT — 50W

1L — 2L — 2N — 3L — 3LA — 3N — 4+ — 4- — 5+ — 5- — 6+ — 6- — 7+ — 7- — ILA — IN — EMA — EM — WC+ — WC- — BZA — BZB — EXA — EXB

DAY/NIGHT SW — CLOSED IN DAY POSITION — DAY/NIGHT SW CLOSED IN DAY POSITION — RIGHT NO. SIGNS "A" END

15A — 1.0A — 4.0A — 7A — TR1B 2.5A — TR1C — 5A — 3.75A — 1A — 1.2A — TR2A — TR2B — Ø 75W — 20A — 2A

ACIC1 — ACIB1 — ACIA1 — 50A — 120 VAC 3Ø — SEE DWG 8-01-791

TR-1 — TR-2 — A — B — C — B+ — B-

50A MAIN — 64 VDC BB+ — BB-

REFERENCE DRAWINGS: 4730-39 — 4700-29 — BT/KM USED ON

EQUIPMENT ENGINEERING — Amtrak — TITLE: WIRING, LIGHTING AND CONVENIENCE OUTLETS SCHEMATIC

E-01-836 B

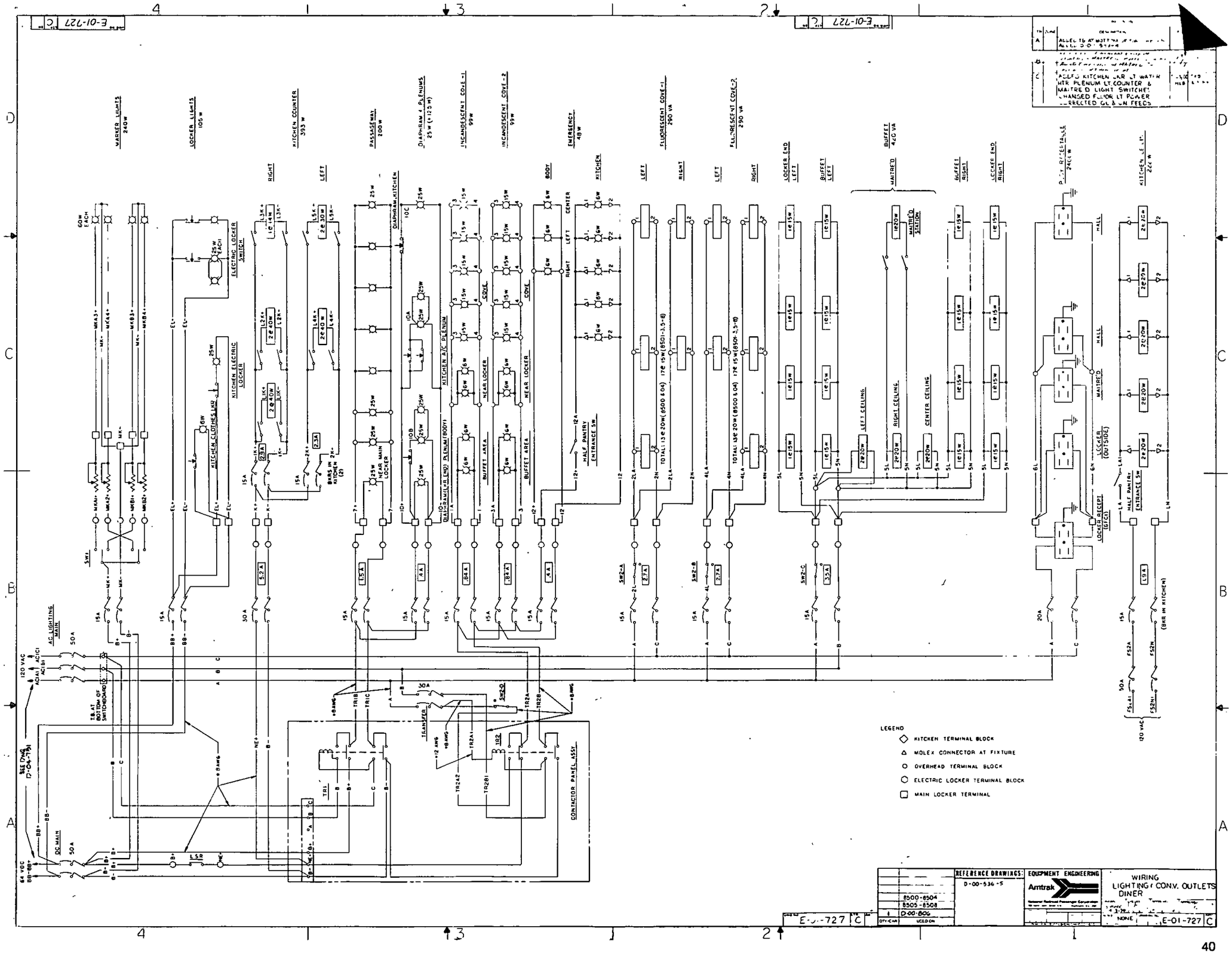

MARKER LIGHTS 240W
LOCKER LIGHTS 105W
KITCHEN COUNTER 393 W
PASSAGEWAY 200W
DIAPHRAM & PLENUMS 25 W (+125 W)
INCANDESCENT COVE-1 99W
INCANDESCENT COVE-2 99W
EMERGENCY 48W
FLUORESCENT COVE-1 290 VA
FLUORESCENT COVE-2 290 VA
BUFFET 420 VA
KITCHEN LT. 222 W
ELECTRIC LOCKER SWITCH
KITCHEN ELECTRIC LOCKER
KITCHEN CLOTHES LKR
KITCHEN A/C PLENUM
NEAR LOCKER
BUFFET AREA
HALF PANTRY ENTRANCE SW
LEFT CEILING
RIGHT CEILING
CENTER CEILING
MAITRE'D STATION
LOCKER RECEPT (GFCI)
HALL
AC LIGHTING MAIN
DC MAIN
CONTACTOR PANEL ASSY
TRANSFER
LEGEND
KITCHEN TERMINAL BLOCK
MOLEX CONNECTOR AT FIXTURE
OVERHEAD TERMINAL BLOCK
ELECTRIC LOCKER TERMINAL BLOCK
MAIN LOCKER TERMINAL
REFERENCE DRAWINGS:
D-00-536-5
EQUIPMENT ENGINEERING
Amtrak
WIRING
LIGHTING & CONV. OUTLETS
DINER
E-01-727

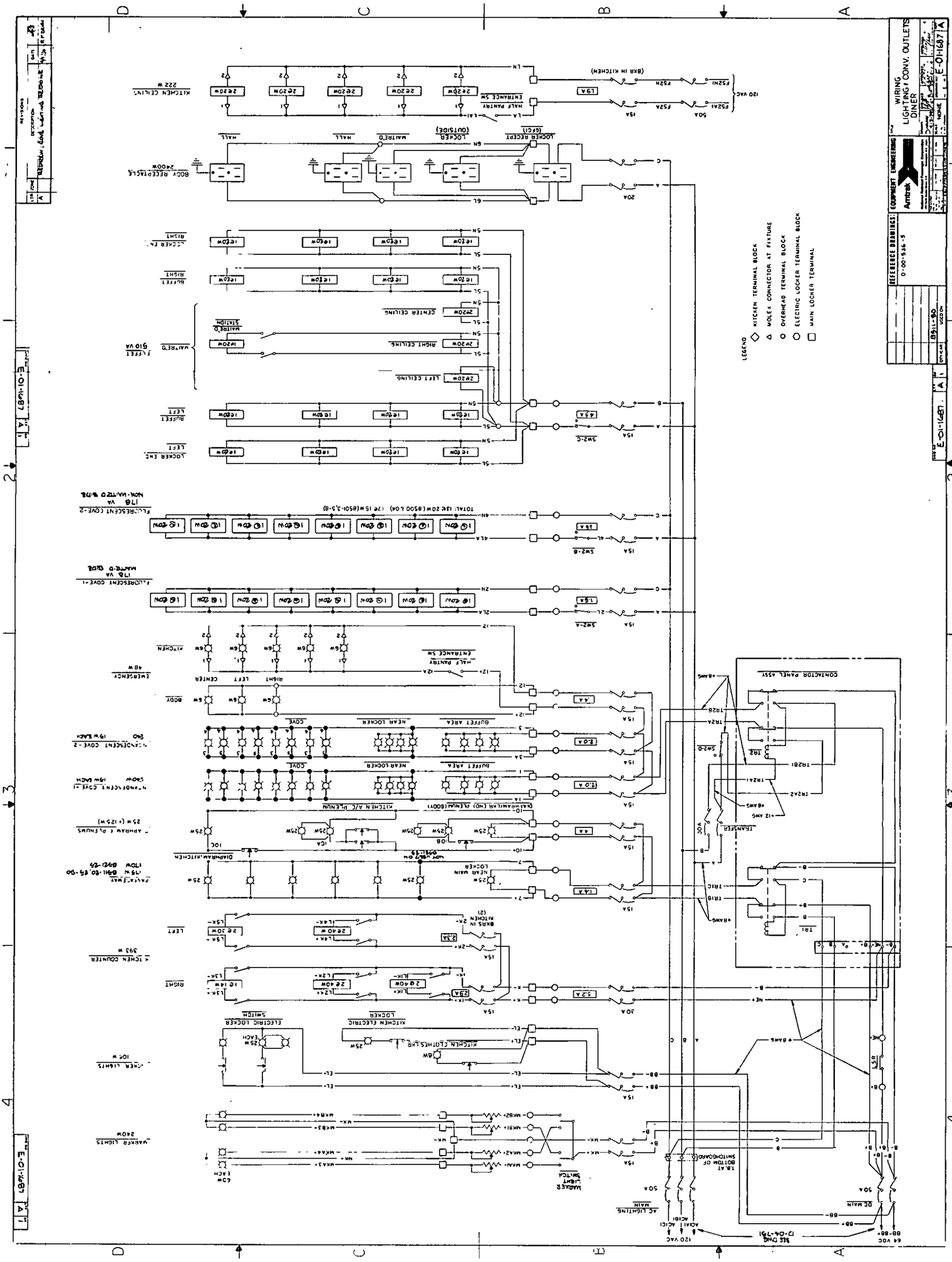
WIRING
LIGHTING / CONV. OUTLETS
DINER
EQUIPMENT ENGINEERING
Amtrak
REFERENCE DRAWINGS:
0-00-936-5
E-01-1687
NONE
LEGEND
KITCHEN TERMINAL BLOCK
MOLEX CONNECTOR AT FIXTURE
OVERHEAD TERMINAL BLOCK
ELECTRIC LOCKER TERMINAL BLOCK
MAIN LOCKER TERMINAL
CONTACTOR PANEL ASSY
AC LIGHTING MAIN
DC MAIN
120 VAC
64 VDC
50A
15A
20A
25A
TRANSFER
MARKER LIGHTS
240W
ELECTRIC LOCKER SWITCH
KITCHEN ELECTRIC LOCKER
BODY RECEPTACLE 2400W
BUFFET AREA
NEAR LOCKER
COVE
CENTER CEILING
RIGHT CEILING
LEFT CEILING
MAITRE'D STATION
BUFFET 510 VA
EMERGENCY
MALE PANTRY ENTRANCE SW
KITCHEN A/C PLENUM
DIAPHRAM (END) PLENUM (BOOTH)
DIAPHRAM KITCHEN
PASSENGER 175W
ELECTRIC LOCKER
KITCHEN CLOTHESLINE
BARS IN KITCHEN (2)
KITCHEN COUNTER 393 W
LOCKER ENT. RIGHT
LOCKER ENT. LEFT
BUFFET RIGHT
BUFFET LEFT
FLUORESCENT COVE-2 178 VA NON-WATTED W/BZ
FLUORESCENT COVE-1 178 VA WATTED CODE
FLUORESCENT COVE-1 360 19W EACH
FLUORESCENT COVE-2 540 19W EACH
TOTAL: 16E 20W (8500 A 04) 12E 15W (8504-3,5-8)
SW2-A
SW2-B
SW2-C
SW2-D
TB1
TB1AT BOTTOM OF SWITCHBOARD
MARKER LIGHT SWITCH
MK81
MK82
MK83
MK84
MK85
MK86
MK87
MK88
MK89
MK810
MK811
MK812
MK813
MK814
MK815
MK816
MK817
MK818
MK819
MK820
MK821
MK822
MK823
MK824
MK825
MK826
MK827
MK828
MK829
MK830
MK831
MK832
MK833
MK834
MK835
MK836
MK837
MK838
MK839
MK840
MK841
MK842
MK843
MK844
MK845
MK846
MK847
MK848
MK849
MK850
MK851
MK852
MK853
MK854
MK855
MK856
MK857
MK858
MK859
MK860
MK861
MK862
MK863
MK864
MK865
MK866
MK867
MK868
MK869
MK870
MK871
MK872
MK873
MK874
MK875
MK876
MK877
MK878
MK879
MK880
MK881
MK882
MK883
MK884
MK885
MK886
MK887
MK888
MK889
MK890
MK891
MK892
MK893
MK894
MK895
MK896
MK897
MK898
MK899
MK8100
MK8101
MK8102
MK8103
MK8104
MK8105
MK8106
MK8107
MK8108
MK8109
MK8110
MK8111
MK8112
MK8113
MK8114
MK8115
MK8116
MK8117
MK8118
MK8119
MK8120
MK8121
MK8122
MK8123
MK8124
MK8125
MK8126
MK8127
MK8128
MK8129
MK8130
MK8131
MK8132
MK8133
MK8134
MK8135
MK8136
MK8137
MK8138
MK8139
MK8140
MK8141
MK8142
MK8143
MK8144
MK8145
MK8146
MK8147
MK8148
MK8149
MK8150
MK8151
MK8152
MK8153
MK8154
MK8155
MK8156
MK8157
MK8158
MK8159
MK8160
MK8161
MK8162
MK8163
MK8164
MK8165
MK8166
MK8167
MK8168
MK8169
MK8170
MK8171
MK8172
MK8173
MK8174
MK8175
MK8176
MK8177
MK8178
MK8179
MK8180
MK8181
MK8182
MK8183
MK8184
MK8185
MK8186
MK8187
MK8188
MK8189
MK8190
MK8191
MK8192
MK8193
MK8194
MK8195
MK8196
MK8197
MK8198
MK8199
MK8200
MK8201
MK8202
MK8203
MK8204
MK8205
MK8206
MK8207
MK8208
MK8209
MK8210
MK8211
MK8212
MK8213
MK8214
MK8215
MK8216
MK8217
MK8218
MK8219
MK8220
MK8221
MK8222
MK8223
MK8224
MK8225
MK8226
MK8227
MK8228
MK8229
MK8230
MK8231
MK8232
MK8233
MK8234
MK8235
MK8236
MK8237
MK8238
MK8239
MK8240
MK8241
MK8242
MK8243
MK8244
MK8245
MK8246
MK8247
MK8248
MK8249
MK8250
MK8251
MK8252
MK8253
MK8254
MK8255
MK8256
MK8257
MK8258
MK8259
MK8260
MK8261
MK8262
MK8263
MK8264
MK8265
MK8266
MK8267
MK8268
MK8269
MK8270
MK8271
MK8272
MK8273
MK8274
MK8275
MK8276
MK8277
MK8278
MK8279
MK8280
MK8281
MK8282
MK8283
MK8284
MK8285
MK8286
MK8287
MK8288
MK8289
MK8290
MK8291
MK8292
MK8293
MK8294
MK8295
MK8296
MK8297
MK8298
MK8299
MK8300
MK8301
MK8302
MK8303
MK8304
MK8305
MK8306
MK8307
MK8308
MK8309
MK8310
MK8311
MK8312
MK8313
MK8314
MK8315
MK8316
MK8317
MK8318
MK8319
MK8320
MK8321
MK8322
MK8323
MK8324
MK8325
MK8326
MK8327
MK8328
MK8329
MK8330
MK8331
MK8332
MK8333
MK8334
MK8335
MK8336
MK8337
MK8338
MK8339
MK8340
MK8341
MK8342
MK8343
MK8344
MK8345
MK8346
MK8347
MK8348
MK8349
MK8350
MK8351
MK8352
MK8353
MK8354
MK8355
MK8356
MK8357
MK8358
MK8359
MK8360
MK8361
MK8362
MK8363
MK8364
MK8365
MK8366
MK8367
MK8368
MK8369
MK8370
MK8371
MK8372
MK8373
MK8374
MK8375
MK8376
MK8377
MK8378
MK8379
MK8380
MK8381
MK8382
MK8383
MK8384
MK8385
MK8386
MK8387
MK8388
MK8389
MK8390
MK8391
MK8392
MK8393
MK8394
MK8395
MK8396
MK8397
MK8398
MK8399
MK8400
MK8401
MK8402
MK8403
MK8404
MK8405
MK8406
MK8407
MK8408
MK8409
MK8410
MK8411
MK8412
MK8413
MK8414
MK8415
MK8416
MK8417
MK8418
MK8419
MK8420
MK8421
MK8422
MK8423
MK8424
MK8425
MK8426
MK8427
MK8428
MK8429
MK8430
MK8431
MK8432
MK8433
MK8434
MK8435
MK8436
MK8437
MK8438
MK8439
MK8440
MK8441
MK8442
MK8443
MK8444
MK8445
MK8446
MK8447
MK8448
MK8449
MK8450
MK8451
MK8452
MK8453
MK8454
MK8455
MK8456
MK8457
MK8458
MK8459
MK8460
MK8461
MK8462
MK8463
MK8464
MK8465
MK8466
MK8467
MK8468
MK8469
MK8470
MK8471
MK8472
MK8473
MK8474
MK8475
MK8476
MK8477
MK8478
MK8479
MK8480
MK8481
MK8482
MK8483
MK8484
MK8485
MK8486
MK8487
MK8488
MK8489
MK8490
MK8491
MK8492
MK8493
MK8494
MK8495
MK8496
MK8497
MK8498
MK8499
MK8500
MK8501
MK8502
MK8503
MK8504
MK8505
MK8506
MK8507
MK8508
MK8509
MK8510
MK8511
MK8512
MK8513
MK8514
MK8515
MK8516
MK8517
MK8518
MK8519
MK8520
MK8521
MK8522
MK8523
MK8524
MK8525
MK8526
MK8527
MK8528
MK8529
MK8530
MK8531
MK8532
MK8533
MK8534
MK8535
MK8536
MK8537
MK8538
MK8539
MK8540
MK8541
MK8542
MK8543
MK8544
MK8545
MK8546
MK8547
MK8548
MK8549
MK8550
MK8551
MK8552
MK8553
MK8554
MK8555
MK8556
MK8557
MK8558
MK8559
MK8560
MK8561
MK8562
MK8563
MK8564
MK8565
MK8566
MK8567
MK8568
MK8569
MK8570
MK8571
MK8572
MK8573
MK8574
MK8575
MK8576
MK8577
MK8578
MK8579
MK8580
MK8581
MK8582
MK8583
MK8584
MK8585
MK8586
MK8587
MK8588
MK8589
MK8590
MK8591
MK8592
MK8593
MK8594
MK8595
MK8596
MK8597
MK8598
MK8599
MK8600
MK8601
MK8602
MK8603
MK8604
MK8605
MK8606
MK8607
MK8608
MK8609
MK8610
MK8611
MK8612
MK8613
MK8614
MK8615
MK8616
MK8617
MK8618
MK8619
MK8620
MK8621
MK8622
MK8623
MK8624
MK8625
MK8626
MK8627
MK8628
MK8629
MK8630
MK8631
MK8632
MK8633
MK8634
MK8635
MK8636
MK8637
MK8638
MK8639
MK8640
MK8641
MK8642
MK8643
MK8644
MK8645
MK8646
MK8647
MK8648
MK8649
MK8650
MK8651
MK8652
MK8653
MK8654
MK8655
MK8656
MK8657
MK8658
MK8659
MK8660
MK8661
MK8662
MK8663
MK8664
MK8665
MK8666
MK8667
MK8668
MK8669
MK8670
MK8671
MK8672
MK8673
MK8674
MK8675
MK8676
MK8677
MK8678
MK8679
MK8680
MK8681
MK8682
MK8683
MK8684
MK8685
MK8686
MK8687
MK8688
MK8689
MK8690
MK8691
MK8692
MK8693
MK8694
MK8695
MK8696
MK8697
MK8698
MK8699
MK8700
MK8701
MK8702
MK8703
MK8704
MK8705
MK8706
MK8707
MK8708
MK8709
MK8710
MK8711
MK8712
MK8713
MK8714
MK8715
MK8716
MK8717
MK8718
MK8719
MK8720
MK8721
MK8722
MK8723
MK8724
MK8725
MK8726
MK8727
MK8728
MK8729
MK8730
MK8731
MK8732
MK8733
MK8734
MK8735
MK8736
MK8737
MK8738
MK8739
MK8740
MK8741
MK8742
MK8743
MK8744
MK8745
MK8746
MK8747
MK8748
MK8749
MK8750
MK8751
MK8752
MK8753
MK8754
MK8755
MK8756
MK8757
MK8758
MK8759
MK8760
MK8761
MK8762
MK8763
MK8764
MK8765
MK8766
MK8767
MK8768
MK8769
MK8770
MK8771
MK8772
MK8773
MK8774
MK8775
MK8776
MK8777
MK8778
MK8779
MK8780
MK8781
MK8782
MK8783
MK8784
MK8785
MK8786
MK8787
MK8788
MK8789
MK8790
MK8791
MK8792
MK8793
MK8794
MK8795
MK8796
MK8797
MK8798
MK8799
MK8800
MK8801
MK8802
MK8803
MK8804
MK8805
MK8806
MK8807
MK8808
MK8809
MK8810
MK8811
MK8812
MK8813
MK8814
MK8815
MK8816
MK8817
MK8818
MK8819
MK8820
MK8821
MK8822
MK8823
MK8824
MK8825
MK8826
MK8827
MK8828
MK8829
MK8830
MK8831
MK8832
MK8833
MK8834
MK8835
MK8836
MK8837
MK8838
MK8839
MK8840
MK8841
MK8842
MK8843
MK8844
MK8845
MK8846
MK8847
MK8848
MK8849
MK8850
MK8851
MK8852
MK8853
MK8854
MK8855
MK8856
MK8857
MK8858
MK8859
MK8860
MK8861
MK8862
MK8863
MK8864
MK8865
MK8866
MK8867
MK8868
MK8869
MK8870
MK8871
MK8872
MK8873
MK8874
MK8875
MK8876
MK8877
MK8878
MK8879
MK8880
MK8881
MK8882
MK8883
MK8884
MK8885
MK8886
MK8887
MK8888
MK8889
MK8890
MK8891
MK8892
MK8893
MK8894
MK8895
MK8896
MK8897
MK8898
MK8899
MK8900
MK8901
MK8902
MK8903
MK8904
MK8905
MK8906
MK8907
MK8908
MK8909
MK8910
MK8911
MK8912
MK8913
MK8914
MK8915
MK8916
MK8917
MK8918
MK8919
MK8920
MK8921
MK8922
MK8923
MK8924
MK8925
MK8926
MK8927
MK8928
MK8929
MK8930
MK8931
MK8932
MK8933
MK8934
MK8935
MK8936
MK8937
MK8938
MK8939
MK8940
MK8941
MK8942
MK8943
MK8944
MK8945
MK8946
MK8947
MK8948
MK8949
MK8950
MK8951
MK8952
MK8953
MK8954
MK8955
MK8956
MK8957
MK8958
MK8959
MK8960
MK8961
MK8962
MK8963
MK8964
MK8965
MK8966
MK8967
MK8968
MK8969
MK8970
MK8971
MK8972
MK8973
MK8974
MK8975
MK8976
MK8977
MK8978
MK8979
MK8980
MK8981
MK8982
MK8983
MK8984
MK8985
MK8986
MK8987
MK8988
MK8989
MK8990
MK8991
MK8992
MK8993
MK8994
MK8995
MK8996
MK8997
MK8998
MK8999
MK9000
MK9001
MK9002
MK9003
MK9004
MK9005
MK9006
MK9007
MK9008
MK9009
MK9010
MK9011
MK9012
MK9013
MK9014
MK9015
MK9016
MK9017
MK9018
MK9019
MK9020
MK9021
MK9022
MK9023
MK9024
MK9025
MK9026
MK9027
MK9028
MK9029
MK9030
MK9031
MK9032
MK9033
MK9034
MK9035
MK9036
MK9037
MK9038
MK9039
MK9040
MK9041
MK9042
MK9043
MK9044
MK9045
MK9046
MK9047
MK9048
MK9049
MK9050
MK9051
MK9052
MK9053
MK9054
MK9055
MK9056
MK9057
MK9058
MK9059
MK9060
MK9061
MK9062
MK9063
MK9064
MK9065
MK9066
MK9067
MK9068
MK9069
MK9070
MK9071
MK9072
MK9073
MK9074
MK9075
MK9076
MK9077
MK9078
MK9079
MK9080
MK9081
MK9082
MK9083
MK9084
MK9085
MK9086
MK9087
MK9088
MK9089
MK9090
MK9091
MK9092
MK9093
MK9094
MK9095
MK9096
MK9097
MK9098
MK9099
MK9100
MK9101
MK9102
MK9103
MK9104
MK9105
MK9106
MK9107
MK9108
MK9109
MK9110
MK9111
MK9112
MK9113
MK9114
MK9115
MK9116
MK9117
MK9118
MK9119
MK9120
MK9121
MK9122
MK9123
MK9124
MK9125
MK9126
MK9127
MK9128
MK9129
MK9130
MK9131
MK9132
MK9133
MK9134
MK9135
MK9136
MK9137
MK9138
MK9139
MK9140
MK9141
MK9142
MK9143
MK9144
MK9145
MK9146
MK9147
MK9148
MK9149
MK9150
MK9151
MK9152
MK9153
MK9154
MK9155
MK9156
MK9157
MK9158
MK9159
MK9160
MK9161
MK9162
MK9163
MK9164
MK9165
MK9166
MK9167
MK9168
MK9169
MK9170
MK9171
MK9172
MK9173
MK9174
MK9175
MK9176
MK9177
MK9178
MK9179
MK9180
MK9181
MK9182
MK9183
MK9184
MK9185
MK9186
MK9187
MK9188
MK9189
MK9190
MK9191
MK9192
MK9193
MK9194
MK9195
MK9196
MK9197
MK9198
MK9199
MK9200
MK9201
MK9202
MK9203
MK9204
MK9205
MK9206
MK9207
MK9208
MK9209
MK9210
MK9211
MK9212
MK9213
MK9214
MK9215
MK9216
MK9217
MK9218
MK9219
MK9220
MK9221
MK9222
MK9223
MK9224
MK9225
MK9226
MK9227
MK9228
MK9229
MK9230
MK9231
MK9232
MK9233
MK9234
MK9235
MK9236
MK9237
MK9238
MK9239
MK9240
MK9241
MK9242
MK9243
MK9244
MK9245
MK9246
MK9247
MK9248
MK9249
MK9250
MK9251
MK9252
MK9253
MK9254
MK9255
MK9256
MK9257
MK9258
MK9259
MK9260
MK9261
MK9262
MK9263
MK9264
MK9265
MK9266
MK9267
MK9268
MK9269
MK9270
MK9271
MK9272
MK9273
MK9274
MK9275
MK9276
MK9277
MK9278
MK9279
MK9280
MK9281
MK9282
MK9283
MK9284
MK9285
MK9286
MK9287
MK9288
MK9289
MK9290
MK9291
MK9292
MK9293
MK9294
MK9295
MK9296
MK9297
MK9298
MK9299
MK9300
MK9301
MK9302
MK9303
MK9304
MK9305
MK9306
MK9307
MK9308
MK9309
MK9310
MK9311
MK9312
MK9313
MK9314
MK9315
MK9316
MK9317
MK9318
MK9319
MK9320
MK9321
MK9322
MK9323
MK9324
MK9325
MK9326
MK9327
MK9328
MK9329
MK9330
MK9331
MK9332
MK9333
MK9334
MK9335
MK9336
MK9337
MK9338
MK9339
MK9340
MK9341
MK9342
MK9343
MK9344
MK9345
MK9346
MK9347
MK9348
MK9349
MK9350
MK9351
MK9352
MK9353
MK9354
MK9355
MK9356
MK9357
MK9358
MK9359
MK9360
MK9361
MK9362
MK9363
MK9364
MK9365
MK9366
MK9367
MK9368
MK9369
MK9370
MK9371
MK9372
MK9373
MK9374
MK9375
MK9376
MK9377
MK9378
MK9379
MK9380
MK9381
MK9382
MK9383
MK9384
MK9385
MK9386
MK9387
MK9388
MK9389
MK9390
MK9391
MK9392
MK9393
MK9394
MK9395
MK9396
MK9397
MK9398
MK9399
MK9400
MK9401
MK9402
MK9403
MK9404
MK9405
MK9406
MK9407
MK9408
MK9409
MK9410
MK9411
MK9412
MK9413
MK9414
MK9415
MK9416
MK9417
MK9418
MK9419
MK9420
MK9421
MK9422
MK9423
MK9424
MK9425
MK9426
MK9427
MK9428
MK9429
MK9430
MK9431
MK9432
MK9433
MK9434
MK9435
MK9436
MK9437
MK9438
MK9439
MK9440
MK9441
MK9442
MK9443
MK9444
MK9445
MK9446
MK9447
MK9448
MK9449
MK9450
MK9451
MK9452
MK9453
MK9454
MK9455
MK9456
MK9457
MK9458
MK9459
MK9460
MK9461
MK9462
MK9463
MK9464
MK9465
MK9466
MK9467
MK9468
MK9469
MK9470
MK9471
MK9472
MK9473
MK9474
MK9475
MK9476
MK9477
MK9478
MK9479
MK9480
MK9481
MK9482
MK9483
MK9484
MK9485
MK9486
MK9487
MK9488
MK9489
MK9490
MK9491
MK9492
MK9493
MK9494
MK9495
MK9496
MK9497
MK9498
MK9499
MK9500
MK9501
MK9502
MK9503
MK9504
MK9505
MK9506
MK9507
MK9508
MK9509
MK9510
MK9511
MK9512
MK9513
MK9514
MK9515
MK9516
MK9517
MK9518
MK9519
MK9520
MK9521
MK9522
MK9523
MK9524
MK9525
MK9526
MK9527
MK9528
MK9529
MK9530
MK9531
MK9532
MK9533
MK9534
MK9535
MK9536
MK9537
MK9538
MK9539
MK9540
MK9541
MK9542
MK9543
MK9544
MK9545
MK9546
MK9547
MK9548
MK9549
MK9550
MK9551
MK9552
MK9553
MK9554
MK9555
MK9556
MK9557
MK9558
MK9559
MK9560
MK9561
MK9562
MK9563
MK9564
MK9565
MK9566
MK9567
MK9568
MK9569
MK9570
MK9571
MK9572
MK9573
MK9574
MK9575
MK9576
MK9577
MK9578
MK9579
MK9580
MK9581
MK9582
MK9583
MK9584
MK9585
MK9586
MK9587
MK9588
MK9589
MK9590
MK9591
MK9592
MK9593
MK9594
MK9595
MK9596
MK9597
MK9598
MK9599
MK9600
MK9601
MK9602
MK9603
MK9604
MK9605
MK9606
MK9607
MK9608
MK9609
MK9610
MK9611
MK9612
MK9613
MK9614
MK9615
MK9616
MK9617
MK9618
MK9619
MK9620
MK9621
MK9622
MK9623
MK9624
MK9625
MK9626
MK9627
MK9628
MK9629
MK9630
MK9631
MK9632
MK9633
MK9634
MK9635
MK9636
MK9637
MK9638
MK9639
MK9640
MK9641
MK9642
MK9643
MK9644
MK9645
MK9646
MK9647
MK9648
MK9649
MK9650
MK9651
MK9652
MK9653
MK9654
MK9655
MK9656
MK9657
MK9658
MK9659
MK9660
MK9661
MK9662
MK9663
MK9664
MK9665
MK9666
MK9667
MK9668
MK9669
MK9670
MK9671
MK9672
MK9673
MK9674
MK9675
MK9676
MK9677
MK9678
MK9679
MK9680
MK9681
MK9682
MK9683
MK9684
MK9685
MK9686
MK9687
MK9688
MK9689
MK9690
MK9691
MK9692
MK9693
MK9694
MK9695
MK9696
MK9697
MK9698
MK9699
MK9700
MK9701
MK9702
MK9703
MK9704
MK9705
MK9706
MK9707
MK9708
MK9709
MK9710
MK9711
MK9712
MK9713
MK9714
MK9715
MK9716
MK9717
MK9718
MK9719
MK9720
MK9721
MK9722
MK9723
MK9724
MK9725
MK9726
MK9727
MK9728
MK9729
MK9730
MK9731
MK9732
MK9733
MK9734
MK9735
MK9736
MK9737
MK9738
MK9739
MK9740
MK9741
MK9742
MK9743
MK9744
MK9745
MK9746
MK9747
MK9748
MK9749
MK9750
MK9751
MK9752
MK9753
MK9754
MK9755
MK9756
MK9757
MK9758
MK9759
MK9760
MK9761
MK9762
MK9763
MK9764
MK9765
MK9766
MK9767
MK9768
MK9769
MK9770
MK9771
MK9772
MK9773
MK9774
MK9775
MK9776
MK9777
MK9778
MK9779
MK9780
MK9781
MK9782
MK9783
MK9784
MK9785
MK9786
MK9787
MK9788
MK9789
MK9790
MK9791
MK9792
MK9793
MK9794
MK9795
MK9796
MK9797
MK9798
MK9799
MK9800
MK9801
MK9802
MK9803
MK9804
MK9805
MK9806
MK9807
MK9808
MK9809
MK9810
MK9811
MK9812
MK9813
MK9814
MK9815
MK9816
MK9817
MK9818
MK9819
MK9820
MK9821
MK9822
MK9823
MK9824
MK9825
MK9826
MK9827
MK9828
MK9829
MK9830
MK9831
MK9832
MK9833
MK9834
MK9835
MK9836
MK9837
MK9838
MK9839
MK9840
MK9841
MK9842
MK9843
MK9844
MK9845
MK9846
MK9847
MK9848
MK9849
MK9850
MK9851
MK9852
MK9853
MK9854
MK9855
MK9856
MK9857
MK9858
MK9859
MK9860
MK9861
MK9862
MK9863
MK9864
MK9865
MK9866
MK9867
MK9868
MK9869
MK9870
MK9871
MK9872
MK9873
MK9874
MK9875
MK9876
MK9877
MK9878
MK9879
MK9880
MK9881
MK9882
MK9883
MK9884
MK9885
MK9886
MK9887
MK9888
MK9889
MK9890
MK9891
MK9892
MK9893
MK9894
MK9895
MK9896
MK9897
MK9898
MK9899
MK9900
MK9901
MK9902
MK9903
MK9904
MK9905
MK9906
MK9907
MK9908
MK9909
MK9910
MK9911
MK9912
MK9913
MK9914
MK9915
MK9916
MK9917
MK9918
MK9919
MK9920
MK9921
MK9922
MK9923
MK9924
MK9925
MK9926
MK9927
MK9928
MK9929
MK9930
MK9931
MK9932
MK9933
MK9934
MK9935
MK9936
MK9937
MK9938
MK9939
MK9940
MK9941
MK9942
MK9943
MK9944
MK9945
MK9946
MK9947
MK9948
MK9949
MK9950
MK9951
MK9952
MK9953
MK9954
MK9955
MK9956
MK9957
MK9958
MK9959
MK9960
MK9961
MK9962
MK9963
MK9964
MK9965
MK9966
MK9967
MK9968
MK9969
MK9970
MK9971
MK9972
MK9973
MK9974
MK9975
MK9976
MK9977
MK9978
MK9979
MK9980
MK9981
MK9982
MK9983
MK9984
MK9985
MK9986
MK9987
MK9988
MK9989
MK9990
MK9991
MK9992
MK9993
MK9994
MK9995
MK9996
MK9997
MK9998
MK9999
MK10000

REVISIONS				
LTR	ZONE	DESCRIPTION	DATE	APP'D
A	C-3	19C, 20C, 21, 141, 19A, 20A, BLR2 WERE CONNECTED TO NON LOCKER END TERMINAL BLOCK. PSI, KOU @ PSIG A OPEN & B OPEN LESS THAN 5 PSIG A CLOSED & B OPEN	3/29/79	DF [illegible]
B	ALL	CORRECTION 23A & 23B ON B-END (B) BL+ & BLR2 & 2DA CHANGED TO MATCH CAR AS BUILT	8/1/79	[illegible]
C		CNG USED ON Amd Rep Dwg Blocks See 83478-T, Sheet	JBR	TB 84-40 8-7-83

A-END J-BOX

B-END J-BOX

RECEPTACLES — LEFT — RIGHT — DUMMY

#10 AWG ALL OTHERS #12 AWG EXCEPT SHIELDED WHICH IS 14/2

2D	2D	LOOP RELAY COIL
1	1	TB- BATTERY NEGATIVE
2	2	PA1 TAPE MUSIC-1 (BLK)
3	3	PA2 TAPE MUSIC-1 (WHT)
4	4	PA3 PA & INTERCOM (BLK)
5	5	PA4 PA INTERCOM (WHT)
6	6	PA5 PA CONTROL (BLK)
7	7	PA6 PA CONTROL (WHT)
8	8	RA1 RADIO (BLK)
9	9	RA2 RADIO (WHT)
10	10	EP1 BRAKE APPLICATION
11	11	EP2 BRAKE RELEASE
12	12	EP3 BRAKE NEGATIVE
13	13	D1 DOOR CONTROL
14	14	D2 DOOR CONTROL
15	15	D3 DOOR CONTROL
16	16	D4 DOOR CONTROL
17	17	DC1A DOOR CLOSE LIGHT
18	18	BRS BRAKE RELEASE LIGHT
19A	19A	BAB BRAKE APPLIED LIGHT
20	20	
2CA	2CA	HJ HOT JOURNAL
21	21	CS CONDUCTOR SIGNAL
22	22	DC2A DOOR CLOSE LIGHT
23	23	PA7 TAPE MUSIC-2 (BLK)
24	24	PA8 TAPE MUSIC-2 (WHT)
25	25	BLS CONDUCTOR DOOR CLOSED LIGHT
26	26	AN ATTENDANT CALL
27	27	
		BL+
		BLR2
SP1	SP1	
SP2	SP2	

N# INDICATES 27 POINT RECEPTACLE PIGTAIL WIRE TAG N#

N# INDICATES 27 POINT RECEPTACLE PIGTAIL WIRE TAG N#

NOTE POLARITY

AIR BRAKE PRESSURE SWITCHES
MORE THAN 23 PSIG B OPEN & A CLOSED
LESS THAN 10 PSIG B CLOSED & A OPEN

ELECTRIC LOCKER TERMINAL STRIP (COACH ONLY)

ALL #12 AWG EXCEPT WIRE-2 WHICH IS #10 AWG

PA UNITS

BAGGAGE & BAGDORM ONLY

ALL OTHER CARS

TB-2

TB-1

CONDUCTOR SIGNAL

A-END COND SIGNAL

B-END

E-S DECELOSTAT PLUG

LOOP RELAY PANEL

NOTE:
SEE DRAWING C-01-1498 & C-01-1499 FOR 27PT JUMPER SCHEMATICS

REFERENCE DRAWINGS	
D-00-805 (4600)	
D-00-602 (2880)	
8400-03	
4600-26	
2880-83	

EQUIPMENT ENGINEERING — Amtrak

TITLE: COMMUNICATIONS TRAINLINE SCHEMATIC 4600 COACH & 2080 SLEEPER CARS

E-01-526

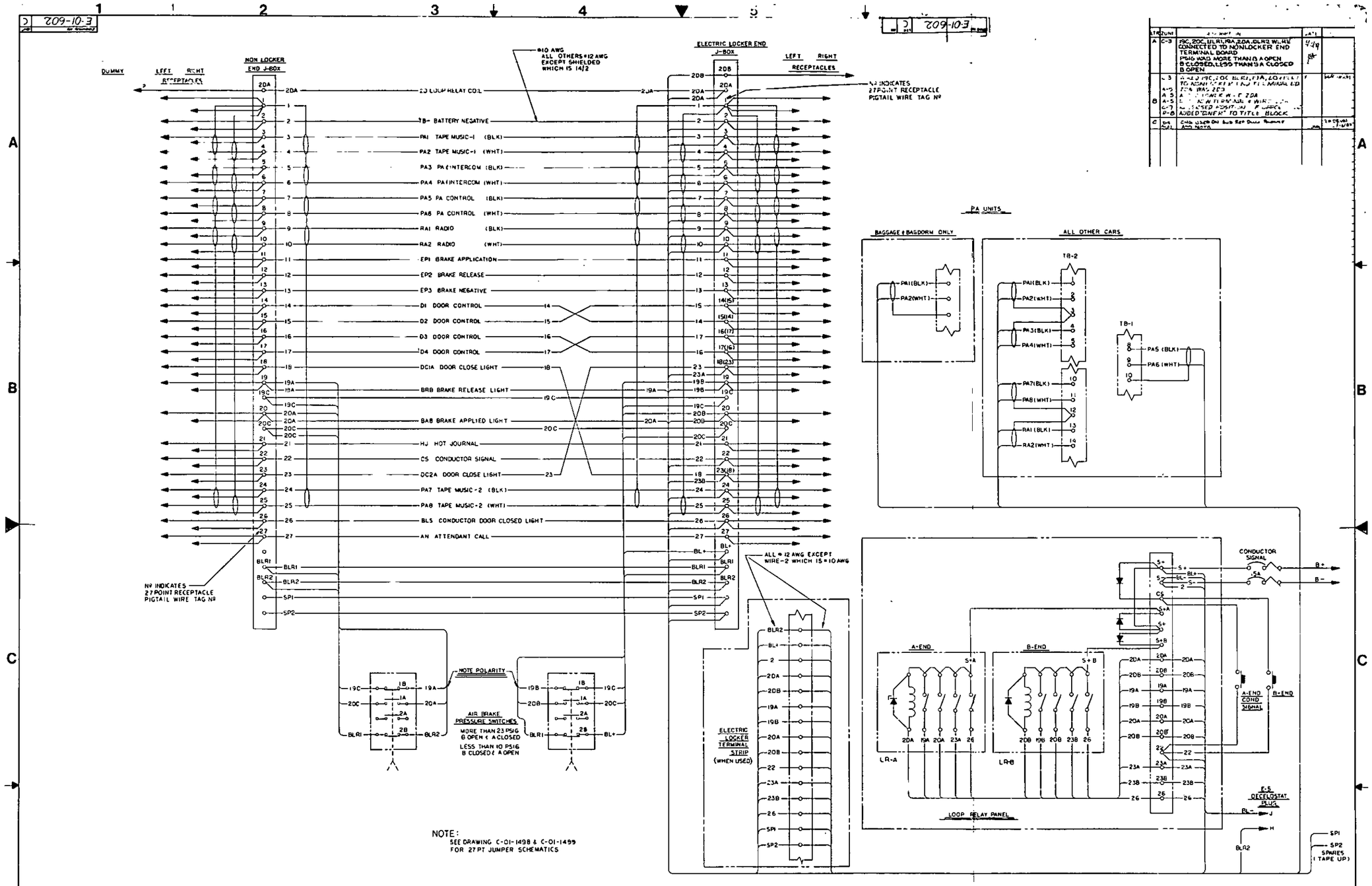

QTY/CAR	USED ON	QTY/CAR	USED ON	QTY/CAR	USED ON	QTY/CAR	USED ON	QTY/CAR	USED ON	QTY/CAR	USED ON	QTY/CAR	USED ON
			8505-08		4730-39		3113-17		2871-79		2430-56		1626-27
			8500-04		4700-29		3112		2482		2089-97		1622-25
	8526-28		7600-18		4649-50		3106-11		2474-81		2080-88		1619-21
	8521-25		7000-07		4626-48		3100-05		2469-73		2054-56		1618
	8511-20		5000-08		4000-26		2895-96		2461-68		2050-53		1614-17
	8509-10		4740-42		3118-27		2884-94		2457-60		1628-37		1610-13

REFERENCE DRAWINGS:	REFERENCE DRAWINGS:
	D-00-806
	D-00-802
	D-00-801

EQUIPMENT ENGINEERING
Amtrak
National Railroad Passenger Corporation

TITLE: COMMUNICATIONS TRAINLINE SCHEMATIC
BAG/DORM, SLUMBER COACH, I D NER

DWG NO. E-01-602 C

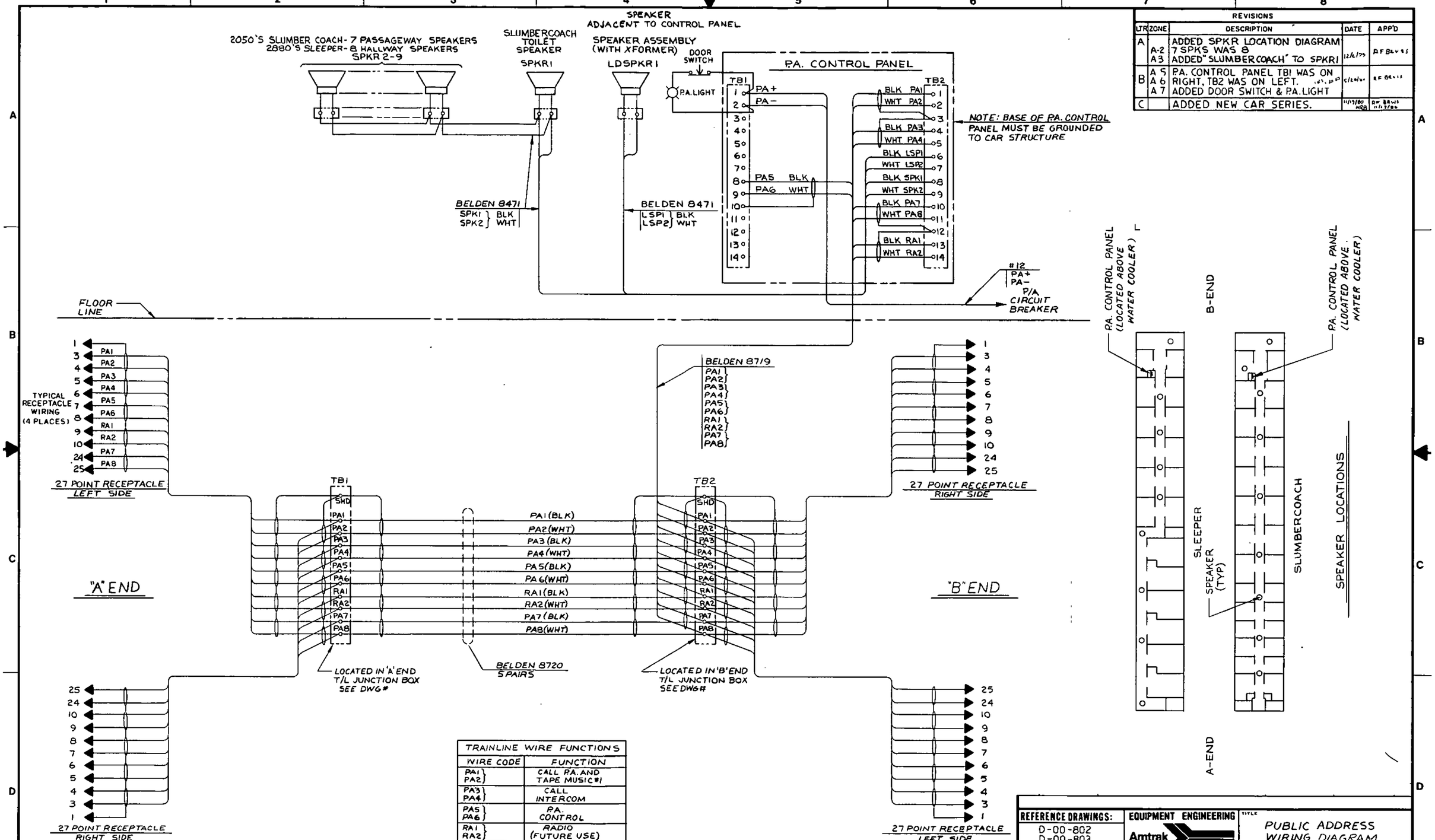

REVISIONS				
LTR	ZONE	DESCRIPTION	DATE	APP'D
A	A-2 A3	ADDED SPKR LOCATION DIAGRAM 7 SPKS WAS 8 ADDED "SLUMBERCOACH" TO SPKR1	12/6/79	RF BEVIS
B	A 5 A 6 A 7	P.A. CONTROL PANEL TB1 WAS ON RIGHT, TB2 WAS ON LEFT. ADDED DOOR SWITCH & P.A. LIGHT	5/20/80	RF BEVIS
C		ADDED NEW CAR SERIES.	11/19/80 NRB	RF BEVIS 11/19/80

TRAINLINE WIRE FUNCTIONS	
WIRE CODE	FUNCTION
PA1 PA2	CALL P.A. AND TAPE MUSIC #1
PA3 PA4	CALL INTERCOM
PA5 PA6	P.A. CONTROL
RA1 RA2	RADIO (FUTURE USE)
PA7 PA8	TAPE MUSIC #2 (FUTURE USE)

QTY/CAR	USED ON	QTY/CAR	USED ON
			2430-82
			2080-97
	2871-96		2050-56

REFERENCE DRAWINGS:
D-00-802
D-00-803

EQUIPMENT ENGINEERING
Amtrak
National Railroad Passenger Corporation

TITLE: PUBLIC ADDRESS WIRING DIAGRAM SLEEPER & SLUMBER COACH

DRAWN: Sorrell 4-8-79 | CHECKED: HA 4/10/79 | APPROVED: 4-26-79 | APPROVED: 4/19/79

SCALE: NONE | DRAWING NO: D-04-775 | REV: C | SH. 1 OF 1

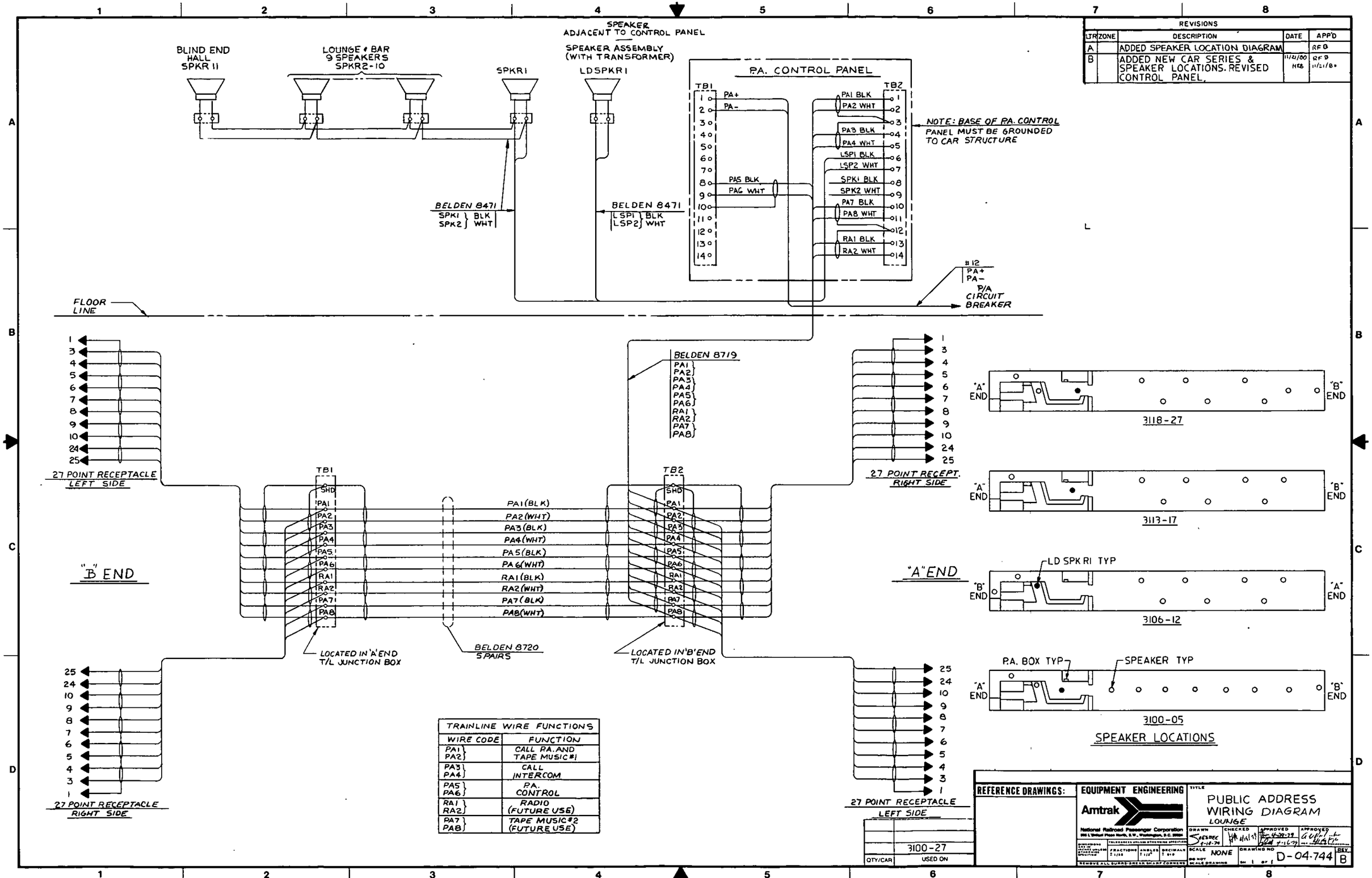

REVISIONS
LTR ZONE DESCRIPTION DATE APP'D
A ADDED SPEAKER LOCATION DIAGRAM RFB
B ADDED NEW CAR SERIES & SPEAKER LOCATIONS. REVISED CONTROL PANEL. 11/21/80 HEB RFB 11/21/80
BLIND END HALL SPKR 11
LOUNGE & BAR 9 SPEAKERS SPKR2-10
SPKR1
SPEAKER ADJACENT TO CONTROL PANEL
SPEAKER ASSEMBLY (WITH TRANSFORMER)
LDSPKR1
P.A. CONTROL PANEL
TB1
TB2
PA+
PA-
PA1 BLK
PA2 WHT
PA3 BLK
PA4 WHT
LSP1 BLK
LSP2 WHT
SPK1 BLK
SPK2 WHT
PA7 BLK
PA8 WHT
RA1 BLK
RA2 WHT
PA5 BLK
PA6 WHT
NOTE: BASE OF P.A. CONTROL PANEL MUST BE GROUNDED TO CAR STRUCTURE
BELDEN 8471
SPK1 SPK2 BLK WHT
BELDEN 8471
LSP1 LSP2 BLK WHT
#12 PA+ PA-
P/A CIRCUIT BREAKER
FLOOR LINE
BELDEN 8719
PA1 PA2 PA3 PA4 PA5 PA6 RA1 RA2 PA7 PA8
27 POINT RECEPTACLE LEFT SIDE
27 POINT RECEPT. RIGHT SIDE
"B" END
"A" END
PA1(BLK)
PA2(WHT)
PA3(BLK)
PA4(WHT)
PA5(BLK)
PA6(WHT)
RA1(BLK)
RA2(WHT)
PA7(BLK)
PA8(WHT)
LOCATED IN 'A' END T/L JUNCTION BOX
BELDEN 8720 5 PAIRS
LOCATED IN 'B' END T/L JUNCTION BOX
27 POINT RECEPTACLE RIGHT SIDE
27 POINT RECEPTACLE LEFT SIDE
"A" END
"B" END
3118-27
3113-17
LD SPK R1 TYP
3106-12
P.A. BOX TYP
SPEAKER TYP
3100-05
SPEAKER LOCATIONS
TRAINLINE WIRE FUNCTIONS
WIRE CODE FUNCTION
PA1 PA2 CALL P.A. AND TAPE MUSIC #1
PA3 PA4 CALL INTERCOM
PA5 PA6 P.A. CONTROL
RA1 RA2 RADIO (FUTURE USE)
PA7 PA8 TAPE MUSIC #2 (FUTURE USE)
QTY/CAR 3100-27 USED ON
REFERENCE DRAWINGS:
EQUIPMENT ENGINEERING
Amtrak
National Railroad Passenger Corporation
TITLE PUBLIC ADDRESS WIRING DIAGRAM LOUNGE
DRAWN CHECKED APPROVED APPROVED
SCALE NONE
DRAWING NO D-04-744
REV B

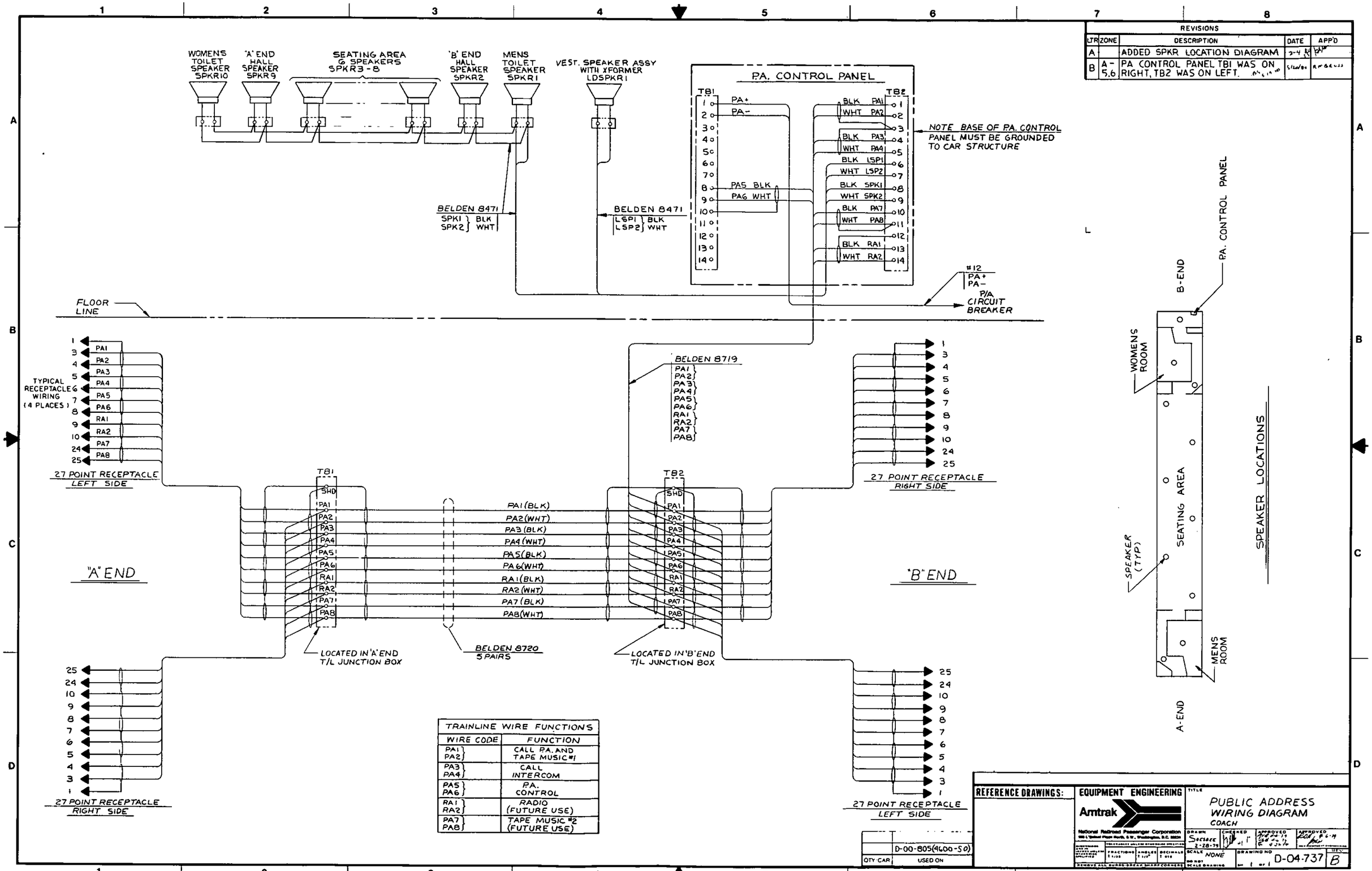

TRAINLINE WIRE FUNCTIONS	
WIRE CODE	FUNCTION
PA1 PA2	CALL P.A. AND TAPE MUSIC #1
PA3 PA4	CALL INTERCOM
PA5 PA6	P.A. CONTROL
RA1 RA2	RADIO (FUTURE USE)
PA7 PA8	TAPE MUSIC #2 (FUTURE USE)

REVISIONS				
LTR	ZONE	DESCRIPTION	DATE	APP'D
A		ADDED SPKR LOCATION DIAGRAM	2-4	
B	A-5,6	PA CONTROL PANEL TB1 WAS ON RIGHT, TB2 WAS ON LEFT.	5/20/80	

QTY CAR	USED ON
	D-00-805(4600-50)

REFERENCE DRAWINGS:

EQUIPMENT ENGINEERING
Amtrak
National Railroad Passenger Corporation

TITLE: PUBLIC ADDRESS WIRING DIAGRAM COACH

DRAWN: Socsbee 2-28-79 | CHECKED | APPROVED | APPROVED

SCALE: NONE | DRAWING NO: D-04-737 | REV: B

SH 1 OF 1

REVISIONS				
LTR	ZONE	DESCRIPTION	DATE	APP'D
A	A3	ADDED SPKR LOCATION DIAGRAM 5 SPKRS WAS 6 SPKRS	12/6/77	RFBR
B	A-5&6	P.A. CONTROL PANEL TB1 WAS ON RIGHT, TB2 WAS ON LEFT.	5/20/80	RFBR

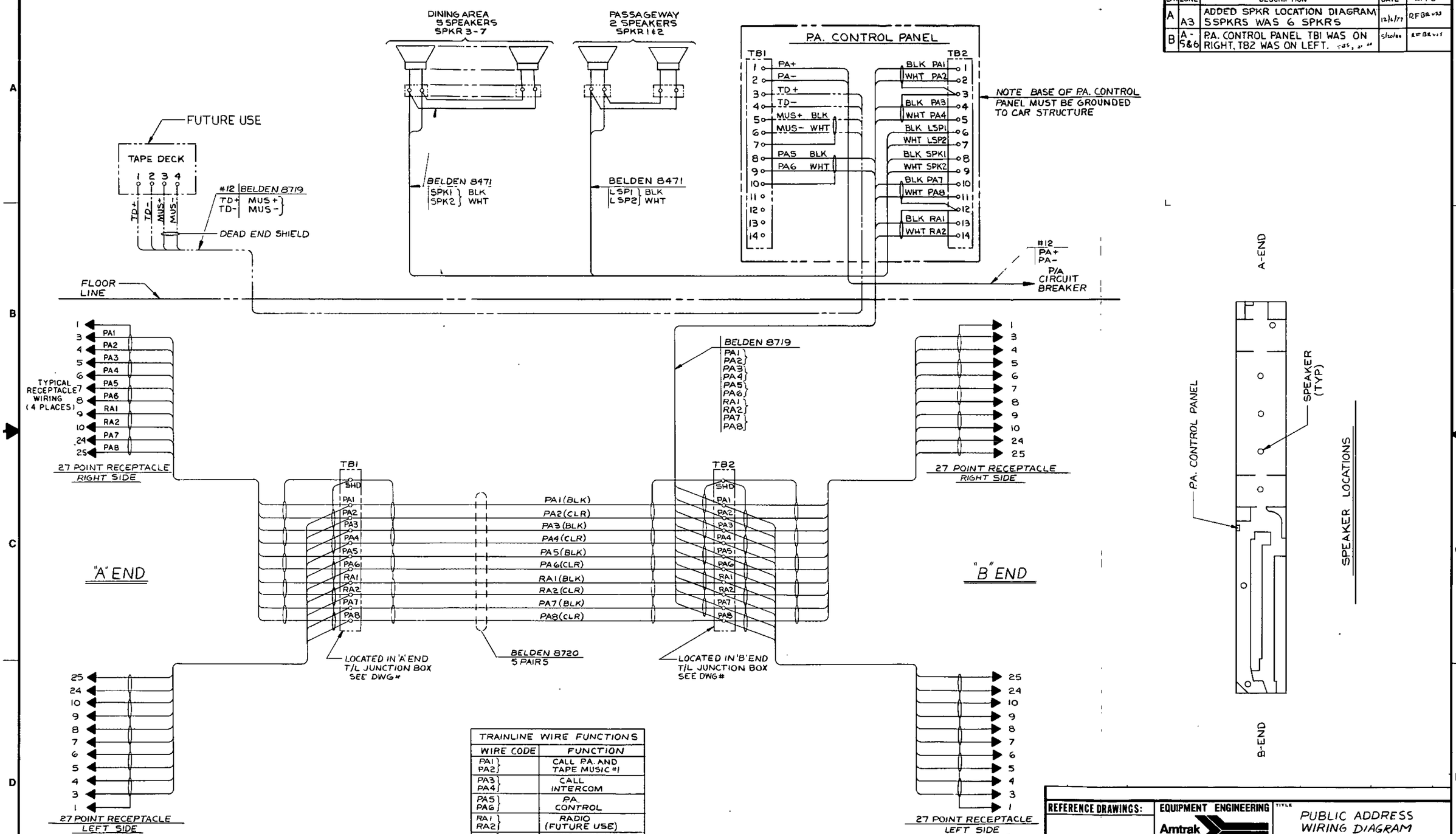

TRAINLINE WIRE FUNCTIONS	
WIRE CODE	FUNCTION
PA1 PA2	CALL P.A. AND TAPE MUSIC #1
PA3 PA4	CALL INTERCOM
PA5 PA6	P.A. CONTROL
RA1 RA2	RADIO (FUTURE USE)
PA7 PA8	TAPE MUSIC #2 (FUTURE USE)

QTY/CAR	USED ON
	D-00-806(8500-30)

REFERENCE DRAWINGS:

EQUIPMENT ENGINEERING
Amtrak
National Railroad Passenger Corporation

TITLE: PUBLIC ADDRESS WIRING DIAGRAM
DINER

DRAWN: Soesbee 2-28-79
CHECKED: GA 4/18/79
APPROVED: 4-24-79
APPROVED: 2/18/79
SCALE: NONE
DO NOT SCALE DRAWING
DRAWING NO: D-04-774
REV: B

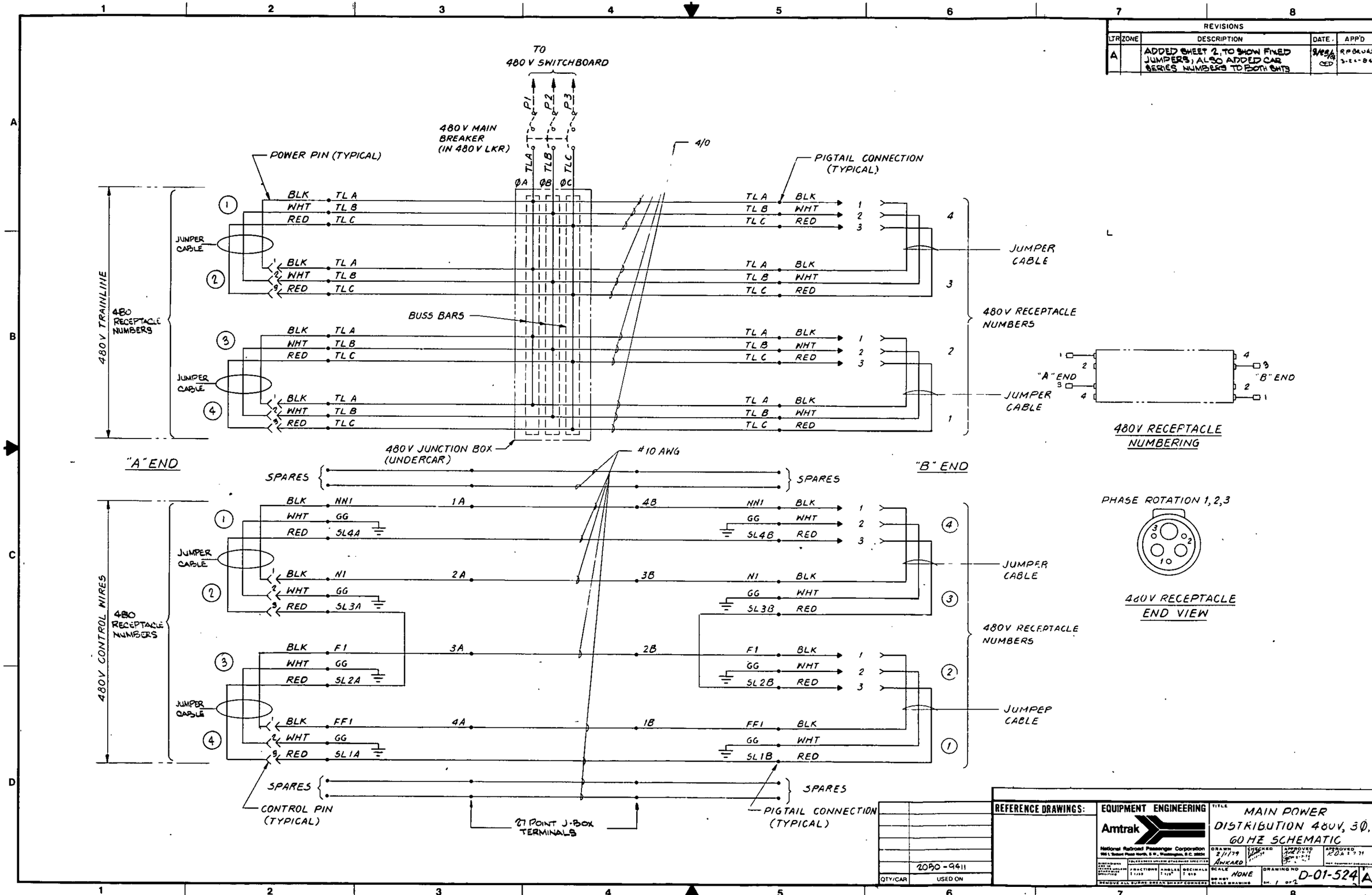
REVISIONS
LTR ZONE DESCRIPTION DATE APP'D
A ADDED SHEET 2, TO SHOW FIXED JUMPERS, ALSO ADDED CAR SERIES NUMBERS TO BOTH SHTS
TO 480 V SWITCHBOARD
P1 P2 P3
480 V MAIN BREAKER (IN 480 V LKR)
TLA TLB TLC
ØA ØB ØC
4/0
POWER PIN (TYPICAL)
PIGTAIL CONNECTION (TYPICAL)
480 V TRAINLINE
480 RECEPTACLE NUMBERS
JUMPER CABLE
BLK WHT RED
TL A TL B TL C
BUSS BARS
480 V RECEPTACLE NUMBERS
480 V JUNCTION BOX (UNDERCAR)
"A" END
"B" END
SPARES
#10 AWG
480 V CONTROL WIRES
NN1 GG SL4A
N1 GG SL3A
F1 GG SL2A
FF1 GG SL1A
1A 2A 3A 4A
4B 3B 2B 1B
NN1 GG SL4B
N1 GG SL3B
F1 GG SL2B
FF1 GG SL1B
CONTROL PIN (TYPICAL)
27 POINT J-BOX TERMINALS
PIGTAIL CONNECTION (TYPICAL)
480V RECEPTACLE NUMBERING
PHASE ROTATION 1, 2, 3
480V RECEPTACLE END VIEW
2050-9411
QTY/CAR USED ON
REFERENCE DRAWINGS:
EQUIPMENT ENGINEERING
Amtrak
National Railroad Passenger Corporation
TITLE MAIN POWER DISTRIBUTION 480V, 3Ø, 60 HZ SCHEMATIC
DRAWN 2/1/79 AWKARD
CHECKED
APPROVED
APPROVED
SCALE NONE
DRAWING NO D-01-524 A
SH. 1 OF 2

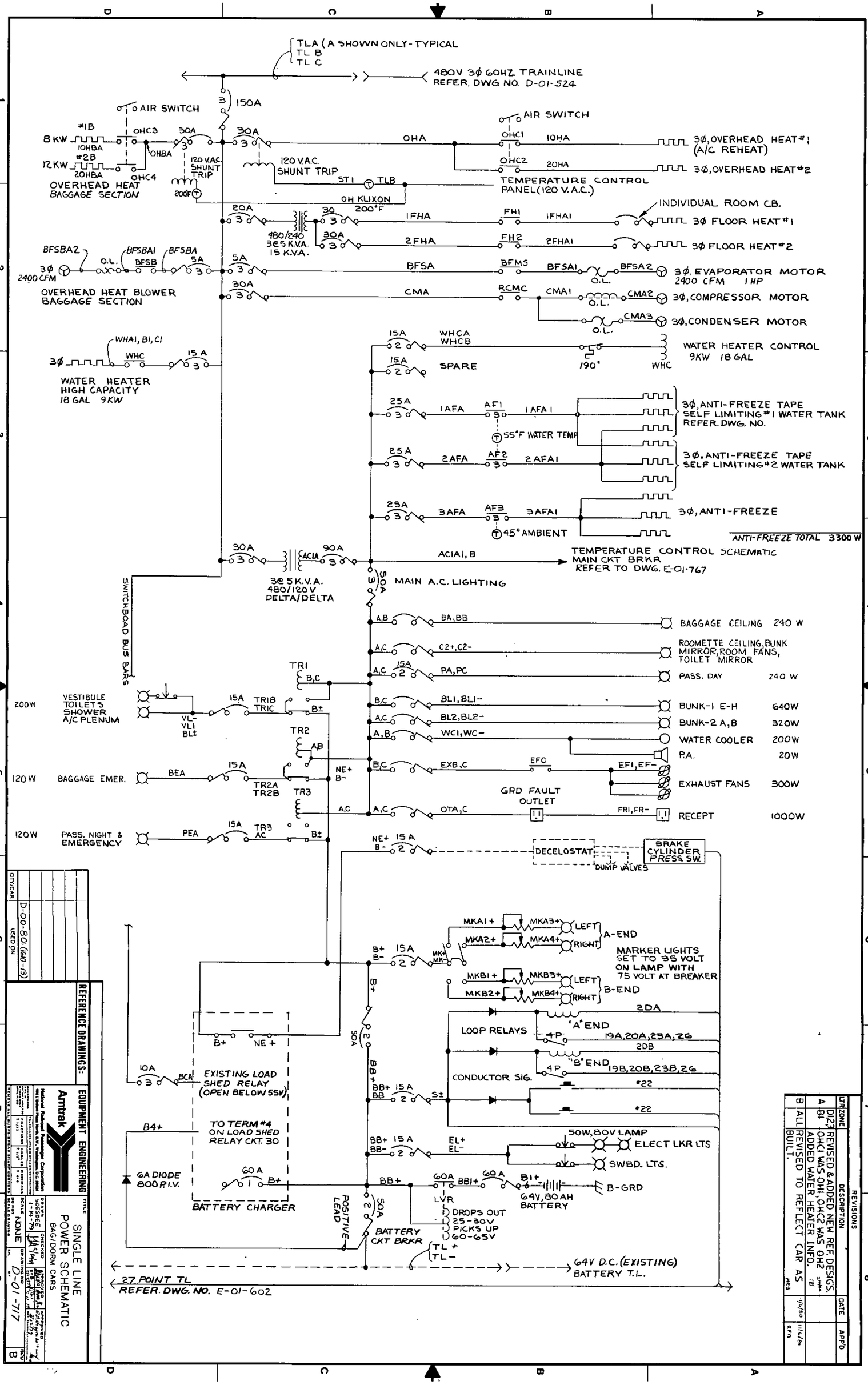
TLA (A SHOWN ONLY-TYPICAL
TL B
TL C
480V 3Ø 60HZ TRAINLINE
REFER. DWG NO. D-01-524
150A
AIR SWITCH
8 KW
12 KW
OVERHEAD HEAT BAGGAGE SECTION
120 V.A.C. SHUNT TRIP
OH KLIXON 200°F
OHA
OHC1
OHC2
10HA
20HA
3Ø, OVERHEAD HEAT #1 (A/C REHEAT)
3Ø, OVERHEAD HEAT #2
TEMPERATURE CONTROL PANEL (120 V.A.C.)
INDIVIDUAL ROOM C.B.
1FHA
2FHA
FH1
FH2
1FHA1
2FHA1
3Ø FLOOR HEAT #1
3Ø FLOOR HEAT #2
480/240 3Ø 5 K.V.A. 15 K.V.A.
BFSBA2
BFSBA1
BFSBA
BFSB
BFSA
BFMS
BFSA1
BFSA2
3Ø, EVAPORATOR MOTOR 2400 CFM 1 HP
2400 CFM
OVERHEAD HEAT BLOWER BAGGAGE SECTION
CMA
RCMC
CMA1
CMA2
CMA3
3Ø, COMPRESSOR MOTOR
3Ø, CONDENSER MOTOR
WHA1, B1, C1
WHC
WATER HEATER HIGH CAPACITY 18 GAL 9KW
WHCA
WHCB
SPARE
190°
WATER HEATER CONTROL 9KW 18 GAL
1AFA
AF1
1AFA1
55°F WATER TEMP
3Ø, ANTI-FREEZE TAPE SELF LIMITING #1 WATER TANK REFER. DWG. NO.
2AFA
AF2
2AFA1
3Ø, ANTI-FREEZE TAPE SELF LIMITING #2 WATER TANK
3AFA
AF3
3AFA1
45° AMBIENT
3Ø, ANTI-FREEZE
ANTI-FREEZE TOTAL 3300 W
ACIA
ACIA1, B
TEMPERATURE CONTROL SCHEMATIC MAIN CKT BRKR REFER TO DWG. E-01-767
3Ø 5 K.V.A. 480/120 V DELTA/DELTA
MAIN A.C. LIGHTING
SWITCHBOAD BUS BARS
BA, BB
BAGGAGE CEILING 240 W
C2+, C2-
ROOMETTE CEILING, BUNK MIRROR, ROOM FANS, TOILET MIRROR
PA, PC
PASS. DAY 240 W
TR1
TR1B
TR1C
VESTIBULE TOILETS SHOWER A/C PLENUM
200W
BL1, BL1-
BUNK-1 E-H 640W
BL2, BL2-
BUNK-2 A, B 320W
WC1, WC-
WATER COOLER 200W
P.A. 20W
TR2
TR2A
TR2B
BAGGAGE EMER.
120W
BEA
EXB, C
EFC
EF1, EF-
EXHAUST FANS 300W
GRD FAULT OUTLET
TR3
OTA, C
FR1, FR-
RECEPT 1000W
PASS. NIGHT & EMERGENCY
PEA
TR3 AC
DECELOSTAT
DUMP VALVES
BRAKE CYLINDER PRESS SW.
MKA1+
MKA2+
MKA3+
MKA4+
LEFT
RIGHT
A-END
MARKER LIGHTS SET TO 35 VOLT ON LAMP WITH 75 VOLT AT BREAKER
MKB1+
MKB2+
MKB3+
MKB4+
B-END
LOOP RELAYS
"A" END
19A, 20A, 23A, 26
"B" END
19B, 20B, 23B, 26
CONDUCTOR SIG.
#22
EXISTING LOAD SHED RELAY (OPEN BELOW 55V)
TO TERM #4 ON LOAD SHED RELAY CKT. 30
6A DIODE 800 P.I.V.
BATTERY CHARGER
50W, 80V LAMP
ELECT LKR LTS
SWBD. LTS.
64V, 80 AH BATTERY
B-GRD
POSITIVE LEAD
BATTERY CKT BRKR
DROPS OUT 25-30V
PICKS UP 60-65V
TL+
TL-
64V D.C. (EXISTING) BATTERY T.L.
27 POINT TL
REFER. DWG. NO. E-01-602
REFERENCE DRAWINGS:
EQUIPMENT ENGINEERING
Amtrak
National Railroad Passenger Corporation
SINGLE LINE POWER SCHEMATIC
BAG/DORM CARS
D-01-717
D-00-801 (660-13)
REVISIONS
LTR ZONE DESCRIPTION DATE APP'D
A D123 REVISED & ADDED NEW REF. DESIGS. B1 OHC1 WAS OH1, OHC2 WAS OH2 ADDED WATER HEATER INFO.
B ALL REVISED TO REFLECT CAR AS BUILT.

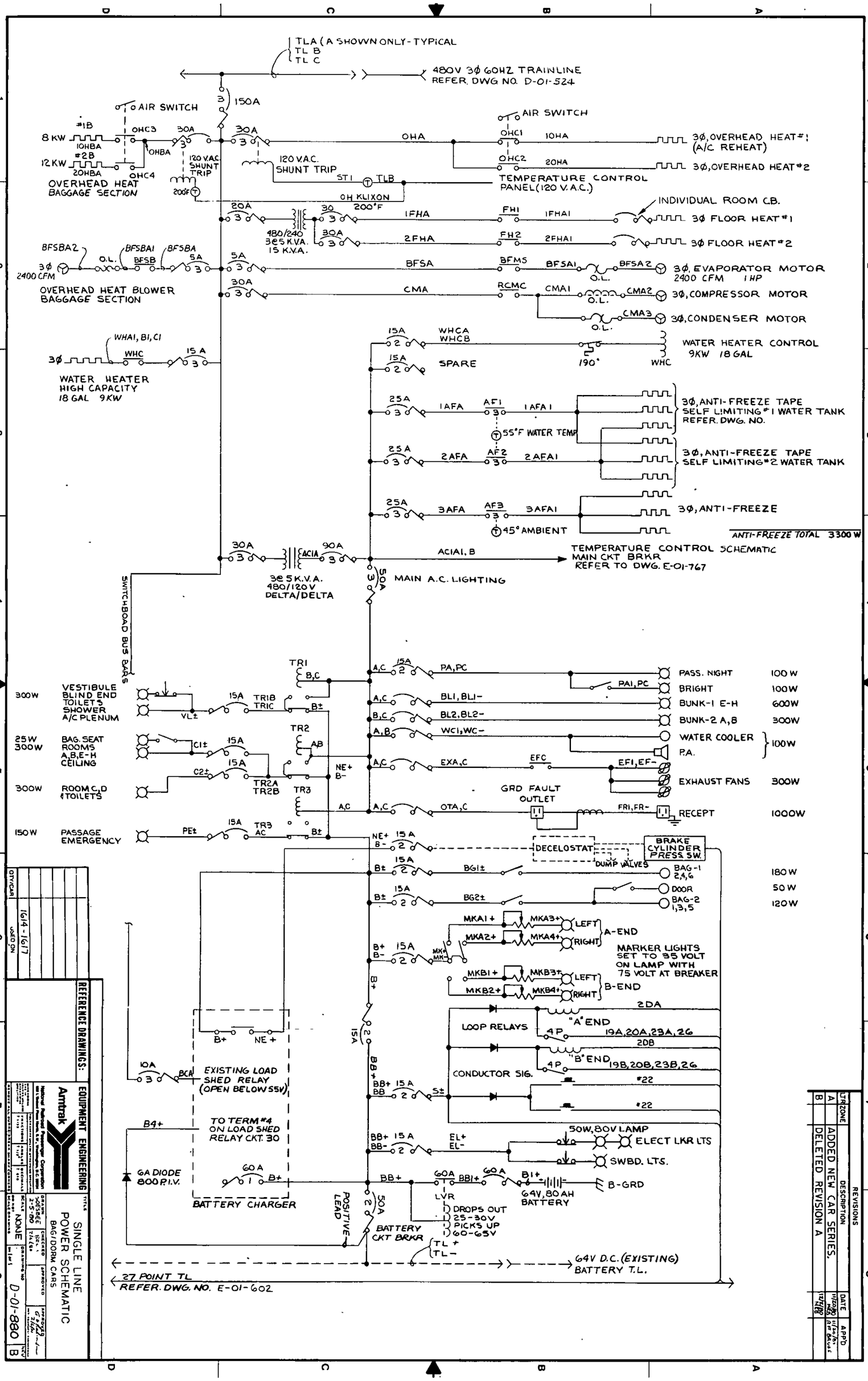
TLA (A SHOWN ONLY - TYPICAL
TL B
TL C
480V 3Ø 60HZ TRAINLINE
REFER. DWG NO. D-01-524
150A
AIR SWITCH
8 KW
12 KW
OVERHEAD HEAT BAGGAGE SECTION
120 V.A.C. SHUNT TRIP
OH KLIXON 200°F
TEMPERATURE CONTROL PANEL (120 V.A.C.)
3Ø, OVERHEAD HEAT #1 (A/C REHEAT)
3Ø, OVERHEAD HEAT #2
INDIVIDUAL ROOM C.B.
3Ø FLOOR HEAT #1
3Ø FLOOR HEAT #2
480/240 3Ø 5 K.V.A. 15 K.V.A.
OVERHEAD HEAT BLOWER BAGGAGE SECTION
3Ø, EVAPORATOR MOTOR 2400 CFM 1 HP
3Ø, COMPRESSOR MOTOR
3Ø, CONDENSER MOTOR
WATER HEATER HIGH CAPACITY 18 GAL 9KW
WATER HEATER CONTROL 9KW 18 GAL
SPARE
3Ø, ANTI-FREEZE TAPE SELF LIMITING #1 WATER TANK REFER. DWG. NO.
55°F WATER TEMP
3Ø, ANTI-FREEZE TAPE SELF LIMITING #2 WATER TANK
3Ø, ANTI-FREEZE
45° AMBIENT
ANTI-FREEZE TOTAL 3300 W
TEMPERATURE CONTROL SCHEMATIC MAIN CKT BRKR REFER TO DWG. E-01-767
3Ø 5 K.V.A. 480/120 V DELTA/DELTA
MAIN A.C. LIGHTING
SWITCHBOAD BUS BARS
VESTIBULE BLIND END TOILETS SHOWER A/C PLENUM
BAG. SEAT ROOMS A,B,E-H CEILING
ROOM C,D & TOILETS
PASSAGE EMERGENCY
PASS. NIGHT 100 W
BRIGHT 100W
BUNK-1 E-H 600W
BUNK-2 A,B 300W
WATER COOLER
P.A.
EXHAUST FANS 300W
GRD FAULT OUTLET
RECEPT 1000W
DECELOSTAT
BRAKE CYLINDER PRESS. SW.
DUMP VALVES
BAG-1 2,4,6 180 W
DOOR 50 W
BAG-2 1,3,5 120 W
A-END
MARKER LIGHTS SET TO 35 VOLT ON LAMP WITH 75 VOLT AT BREAKER
B-END
LOOP RELAYS
"A" END 19A,20A,23A,26
"B" END 19B,20B,23B,26
CONDUCTOR SIG.
EXISTING LOAD SHED RELAY (OPEN BELOW 55V)
TO TERM #4 ON LOAD SHED RELAY CKT. 30
6A DIODE 800 P.I.V.
BATTERY CHARGER
POSITIVE LEAD
BATTERY CKT BRKR
50W, 80V LAMP
ELECT LKR LTS
SWBD. LTS.
64V, 80 AH BATTERY
B-GRD
DROPS OUT 25-30V PICKS UP 60-65V
64V D.C. (EXISTING) BATTERY T.L.
27 POINT TL
REFER. DWG. NO. E-01-602
REFERENCE DRAWINGS:
EQUIPMENT ENGINEERING
Amtrak
SINGLE LINE POWER SCHEMATIC
BAG/DORM CARS
D-01-880
REVISIONS
ADDED NEW CAR SERIES.
DELETED REVISION A

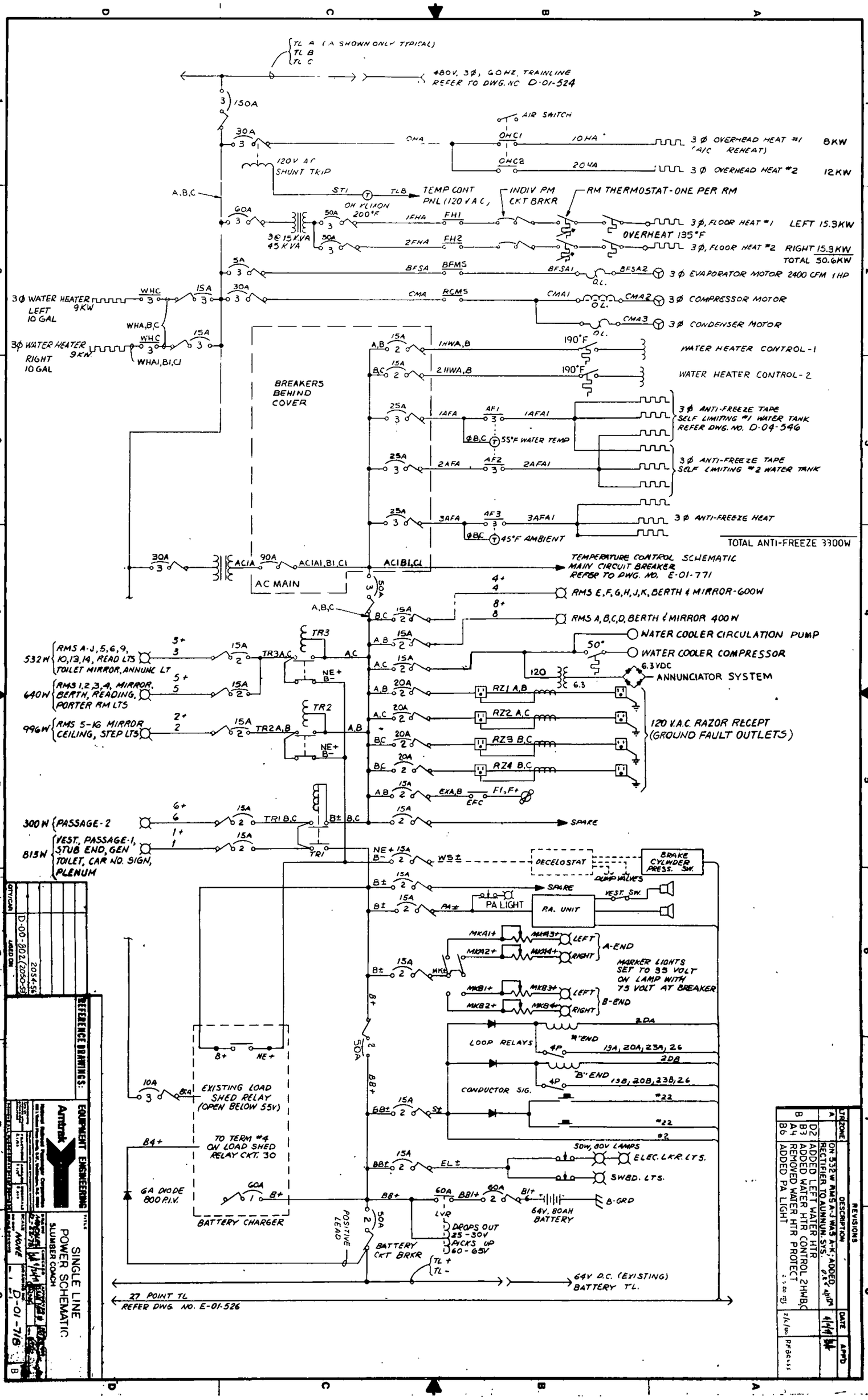

TL A (A SHOWN ONLY TYPICAL)
TL B
TL C
480V, 3Ø, 60HZ, TRAINLINE
REFER TO DWG. NO. D-01-524
150A
AIR SWITCH
OHC1
OHC2
10HA
20HA
3Ø OVERHEAD HEAT #1 (A/C REHEAT) 8KW
3Ø OVERHEAD HEAT #2 12KW
120V AC SHUNT TRIP
TEMP CONT PNL (120 V A C)
ON KLIXON 200°F
INDIV PM CKT BRKR
RM THERMOSTAT-ONE PER RM
3Ø, FLOOR HEAT #1 LEFT 15.3KW
OVERHEAT 135°F
3Ø, FLOOR HEAT #2 RIGHT 15.3KW
TOTAL 50.6KW
3Ø EVAPORATOR MOTOR 2400 CFM 1HP
3Ø WATER HEATER 9KW LEFT 10 GAL
3Ø WATER HEATER 9KW RIGHT 10 GAL
3Ø COMPRESSOR MOTOR
3Ø CONDENSER MOTOR
BREAKERS BEHIND COVER
WATER HEATER CONTROL-1
WATER HEATER CONTROL-2
3Ø ANTI-FREEZE TAPE SELF LIMITING #1 WATER TANK REFER DWG. NO. D-04-546
55°F WATER TEMP
3Ø ANTI-FREEZE TAPE SELF LIMITING #2 WATER TANK
3Ø ANTI-FREEZE HEAT
45°F AMBIENT
TOTAL ANTI-FREEZE 3300W
AC MAIN
TEMPERATURE CONTROL SCHEMATIC MAIN CIRCUIT BREAKER REFER TO DWG. NO. E-01-771
RMS E,F,G,H,J,K, BERTH & MIRROR-600W
RMS A,B,C,D, BERTH & MIRROR 400W
WATER COOLER CIRCULATION PUMP
WATER COOLER COMPRESSOR
6.3VDC
ANNUNCIATOR SYSTEM
532W RMS A-J, 5,6,9, 10,13,14, READ LTS TOILET MIRROR, ANNUNC LT
640W RMS 1,2,3,4, MIRROR, BERTH, READING, PORTER RM LTS
996W RMS 5-16 MIRROR CEILING, STEP LTS
120 V.A.C. RAZOR RECEPT (GROUND FAULT OUTLETS)
300W PASSAGE-2
813W VEST, PASSAGE-1, STUB END, GEN TOILET, CAR NO. SIGN, PLENUM
SPARE
DECELOSTAT
BRAKE CYLINDER PRESS. SW.
DUMP VALVES
PA LIGHT
P.A. UNIT
VEST. SW.
A-END
B-END
MARKER LIGHTS SET TO 35 VOLT ON LAMP WITH 75 VOLT AT BREAKER
LOOP RELAYS
"A" END
"B" END
CONDUCTOR SIG.
EXISTING LOAD SHED RELAY (OPEN BELOW 55V)
TO TERM #4 ON LOAD SHED RELAY CKT. 30
6A DIODE 800 P.I.V.
BATTERY CHARGER
50W, 80V LAMPS
ELEC. LKR. LTS.
SWBD. LTS.
64V, 80AH BATTERY
B-GRD
POSITIVE LEAD
BATTERY CKT BRKR
DROPS OUT 25-30V PICKS UP 60-65V
64V D.C. (EXISTING) BATTERY TL.
27 POINT TL REFER DWG. NO. E-01-526
REFERENCE DRAWINGS:
EQUIPMENT ENGINEERING
Amtrak
SINGLE LINE POWER SCHEMATIC
SLUMBER COACH
D-01-718
REVISIONS
ON 532W RMS A-J WAS A-K; ADDED RECTIFIER TO ALUMINUM SYS.
ADDED LEFT WATER HTR
ADDED WATER HTR CONTROL 2HWB,C
REMOVED WATER HTR PROTECT
ADDED PA LIGHT

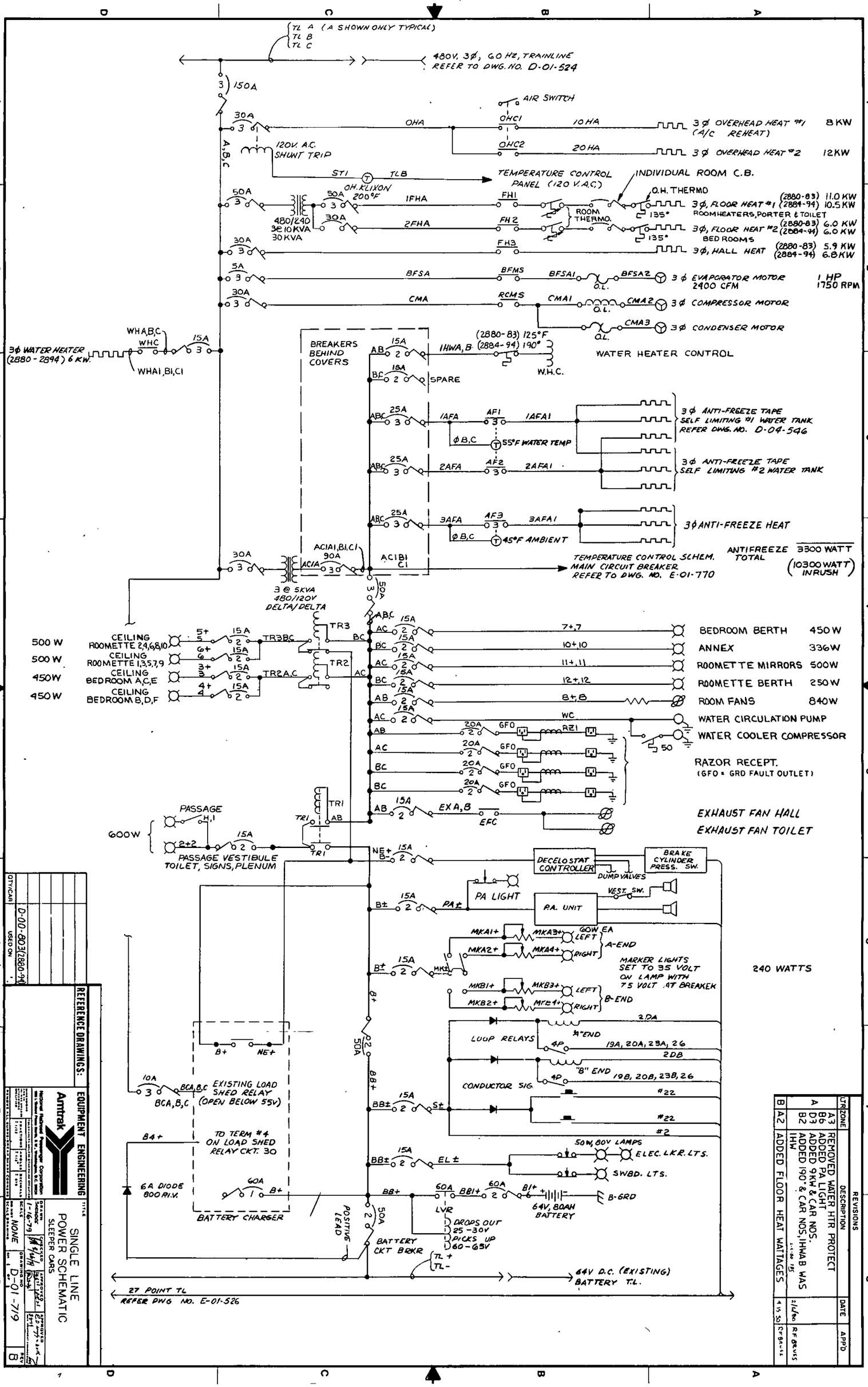

TL A (A SHOWN ONLY TYPICAL)
TL B
TL C
480V, 3Ø, 60 HZ, TRAINLINE
REFER TO DWG. NO. D-01-524
150A
AIR SWITCH
OHA
OHC1
10 HA
3Ø OVERHEAD HEAT #1 (A/C REHEAT) 8 KW
OHC2
20 HA
3Ø OVERHEAD HEAT #2 12 KW
120V. A.C. SHUNT TRIP
ST1
TLB
TEMPERATURE CONTROL PANEL (120 V.A.C.)
INDIVIDUAL ROOM C.B.
O.H. THERMO
OH. KLIXON 200°F
1FHA
FH1
ROOM THERMO.
3Ø, FLOOR HEAT #1 (2880-83) 11.0 KW (2884-94) 10.5 KW
ROOMHEATERS, PORTER & TOILET
480/240 3Ø 10 KVA 30 KVA
2FHA
FH2
3Ø, FLOOR HEAT #2 (2880-83) 6.0 KW (2884-94) 6.0 KW
BED ROOMS
FH3
3Ø, HALL HEAT (2880-83) 5.9 KW (2884-94) 6.8 KW
BFSA
BFMS
BFSA1
BFSA2
3Ø EVAPORATOR MOTOR 2400 CFM
1 HP 1750 RPM
CMA
RCMS
CMA1
CMA2
3Ø COMPRESSOR MOTOR
CMA3
3Ø CONDENSER MOTOR
3Ø WATER HEATER (2880-2894) 6 KW.
WHA,B,C
WHC
WHA1,B1,C1
BREAKERS BEHIND COVERS
1HWA,B
(2880-83) 125°F (2884-94) 190°
W.H.C.
WATER HEATER CONTROL
SPARE
1AFA
AF1
1AFA1
3Ø ANTI-FREEZE TAPE SELF LIMITING #1 WATER TANK REFER DWG. NO. D-04-546
55°F WATER TEMP
2AFA
AF2
2AFA1
3Ø ANTI-FREEZE TAPE SELF LIMITING #2 WATER TANK
3AFA
AF3
3AFA1
3Ø ANTI-FREEZE HEAT
45°F AMBIENT
ANTIFREEZE TOTAL 3300 WATT (10300 WATT INRUSH)
AC1A1,B1,C1
90A
AC1A
AC1B1 C1
TEMPERATURE CONTROL SCHEM. MAIN CIRCUIT BREAKER REFER TO DWG. NO. E-01-770
3 @ 5KVA 480/120V DELTA/DELTA
TR3
TR2
TR3B,C
TR2A,C
500 W CEILING ROOMETTE 2,4,6,8,10
500 W CEILING ROOMETTE 1,3,5,7,9
450W CEILING BEDROOM A,C,E
450 W CEILING BEDROOM B,D,F
BEDROOM BERTH 450 W
ANNEX 336W
ROOMETTE MIRRORS 500W
ROOMETTE BERTH 250W
ROOM FANS 840W
WC
WATER CIRCULATION PUMP
WATER COOLER COMPRESSOR
GFO
RZ1
RAZOR RECEPT. (GFO = GRD FAULT OUTLET)
EXA,B
EFC
EXHAUST FAN HALL
EXHAUST FAN TOILET
PASSAGE
600W
PASSAGE VESTIBULE TOILET, SIGNS, PLENUM
TR1
DECELOSTAT CONTROLLER
BRAKE CYLINDER PRESS. SW.
DUMP VALVES
PA LIGHT
P.A. UNIT
VEST. SW.
MKA1+
MKA3+
MKA2+
MKA4+
60W EA
LEFT
RIGHT
A-END
MARKER LIGHTS SET TO 35 VOLT ON LAMP WITH 75 VOLT AT BREAKER
240 WATTS
MKB1+
MKB3+
MKB2+
MKB4+
B-END
LOOP RELAYS
"A" END
19A, 20A, 23A, 26
"B" END
19B, 20B, 23B, 26
CONDUCTOR SIG.
#22
#2
EXISTING LOAD SHED RELAY (OPEN BELOW 55V)
TO TERM #4 ON LOAD SHED RELAY CKT. 30
6A DIODE 800 RI.V.
BATTERY CHARGER
50W, 80V LAMPS
ELEC. LKR. LTS.
SWBD. LTS.
64V, 80AH BATTERY
B-GRD
POSITIVE LEAD
BATTERY CKT BRKR
LVR
DROPS OUT 25-30V
PICKS UP 60-65V
64V D.C. (EXISTING) BATTERY T.L.
27 POINT TL
REFER DWG NO. E-01-526
REFERENCE DRAWINGS:
D-00-803(2880-94)
QTY/CAR
USED ON
EQUIPMENT ENGINEERING
Amtrak
SINGLE LINE POWER SCHEMATIC
SLEEPER CARS
NONE
D-01-719
REVISIONS
LTR ZONE DESCRIPTION DATE APP'D
A3 REMOVED WATER HTR PROTECT
B6 ADDED PA LIGHT
D3 ADDED 9KW & CAR NOS.
B2 ADDED 190° & CAR NOS, 1HWAB WAS 1HW
B A2 ADDED FLOOR HEAT WATTAGES

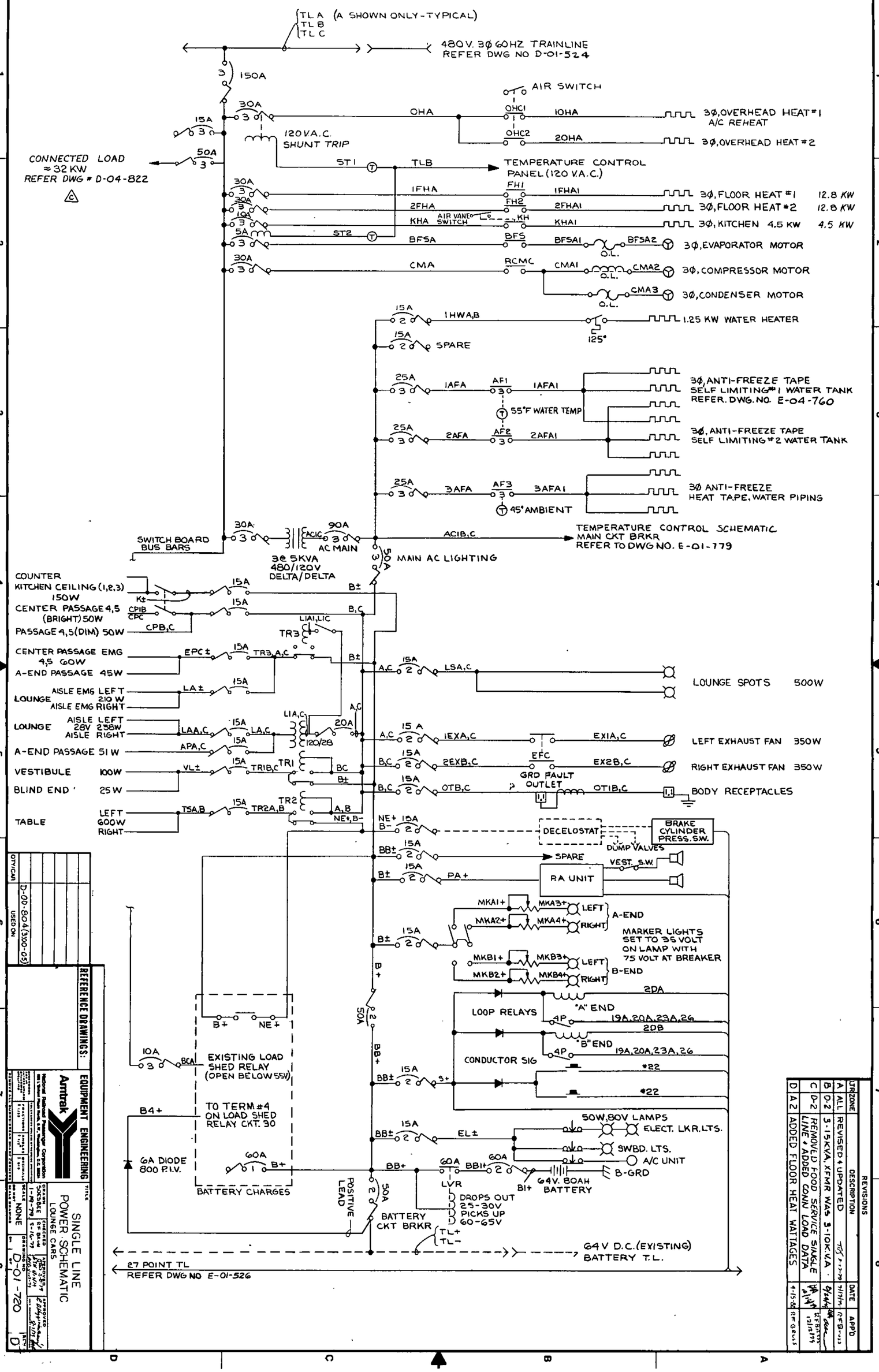

TL A (A SHOWN ONLY-TYPICAL)
TL B
TL C
480V. 3Ø 60HZ TRAINLINE
REFER DWG NO D-01-524
150A
AIR SWITCH
OHA
OHC1
10HA
3Ø, OVERHEAD HEAT #1
A/C REHEAT
OHC2
20HA
3Ø, OVERHEAD HEAT #2
120 V.A.C.
SHUNT TRIP
CONNECTED LOAD
≈32 KW
REFER DWG # D-04-822
ST1
TLB
TEMPERATURE CONTROL
PANEL (120 V.A.C.)
1FHA
FH1
1FHA1
3Ø, FLOOR HEAT #1 12.8 KW
2FHA
FH2
2FHA1
3Ø, FLOOR HEAT #2 12.8 KW
KHA
AIR VANE SWITCH
KH
KHA1
3Ø, KITCHEN 4.5 KW 4.5 KW
ST2
BFSA
BFS
BFSA1
BFSA2
O.L.
3Ø, EVAPORATOR MOTOR
CMA
RCMC
CMA1
CMA2
3Ø, COMPRESSOR MOTOR
CMA3
3Ø, CONDENSER MOTOR
1HWA,B
1.25 KW WATER HEATER
125°
SPARE
1AFA
AF1
1AFA1
3Ø, ANTI-FREEZE TAPE
SELF LIMITING #1 WATER TANK
REFER. DWG. NO. E-04-760
55°F WATER TEMP
2AFA
AF2
2AFA1
3Ø, ANTI-FREEZE TAPE
SELF LIMITING #2 WATER TANK
3AFA
AF3
3AFA1
3Ø ANTI-FREEZE
HEAT TAPE, WATER PIPING
45° AMBIENT
SWITCH BOARD
BUS BARS
AC1C
AC MAIN
ACIB,C
TEMPERATURE CONTROL SCHEMATIC
MAIN CKT BRKR
REFER TO DWG NO. E-01-779
3Ø 5KVA
480/120V
DELTA/DELTA
MAIN AC LIGHTING
COUNTER
KITCHEN CEILING (1,2,3)
150W
CENTER PASSAGE 4,5
(BRIGHT) 50W
PASSAGE 4,5 (DIM) 50W
CPB,C
CENTER PASSAGE EMG
4,5 60W
A-END PASSAGE 45W
EPC±
TR3,A,C
LOUNGE
AISLE EMG LEFT
210 W
AISLE EMG RIGHT
LA±
LOUNGE
AISLE LEFT
28V 238W
AISLE RIGHT
LAA,C
LA,C
A-END PASSAGE 51 W
APA,C
VESTIBULE 100W
VL±
TRIB,C
BLIND END 25 W
TABLE
LEFT
600W
RIGHT
TSA,B
TR2A,B
LSA,C
LOUNGE SPOTS 500W
1EXA,C
EX1A,C
LEFT EXHAUST FAN 350W
2EXB,C
EFC
EX2B,C
RIGHT EXHAUST FAN 350W
GRD FAULT
OUTLET
OTB,C
OTIB,C
BODY RECEPTACLES
DECELOSTAT
BRAKE
CYLINDER
PRESS. S.W.
DUMP VALVES
SPARE
VEST. S.W.
PA+
PA UNIT
MKA1+
MKA3+
MKA2+
MKA4+
LEFT
RIGHT
A-END
MARKER LIGHTS
SET TO 35 VOLT
ON LAMP WITH
75 VOLT AT BREAKER
MKB1+
MKB3+
MKB2+
MKB4+
B-END
LOOP RELAYS
"A" END
19A,20A,23A,26
"B" END
CONDUCTOR SIG
#22
EXISTING LOAD
SHED RELAY
(OPEN BELOW 55V)
TO TERM #4
ON LOAD SHED
RELAY CKT. 30
6A DIODE
800 P.I.V.
BATTERY CHARGES
POSITIVE
LEAD
BATTERY
CKT BRKR
50W, 80V LAMPS
ELECT. LKR. LTS.
SWBD. LTS.
A/C UNIT
B-GRD
64V. 80AH
BATTERY
LVR
DROPS OUT
25-30V
PICKS UP
60-65V
TL+
TL-
64 V D.C. (EXISTING)
BATTERY T.L.
27 POINT TL
REFER DWG NO E-01-526
REFERENCE DRAWINGS:
D-00-804 (3100-05)
QTY/CAR
USED ON
EQUIPMENT ENGINEERING
Amtrak
SINGLE LINE
POWER SCHEMATIC
LOUNGE CARS
D-01-720
REVISIONS
LTR ZONE DESCRIPTION DATE APP'D
A ALL REVISED & UPDATED
B D-2 3-15KVA, XFMR WAS 3-10K.V.A.
C D-2 REMOVED FOOD SERVICE SINGLE LINE & ADDED CONN LOAD DATA
D A2 ADDED FLOOR HEAT WATTAGES

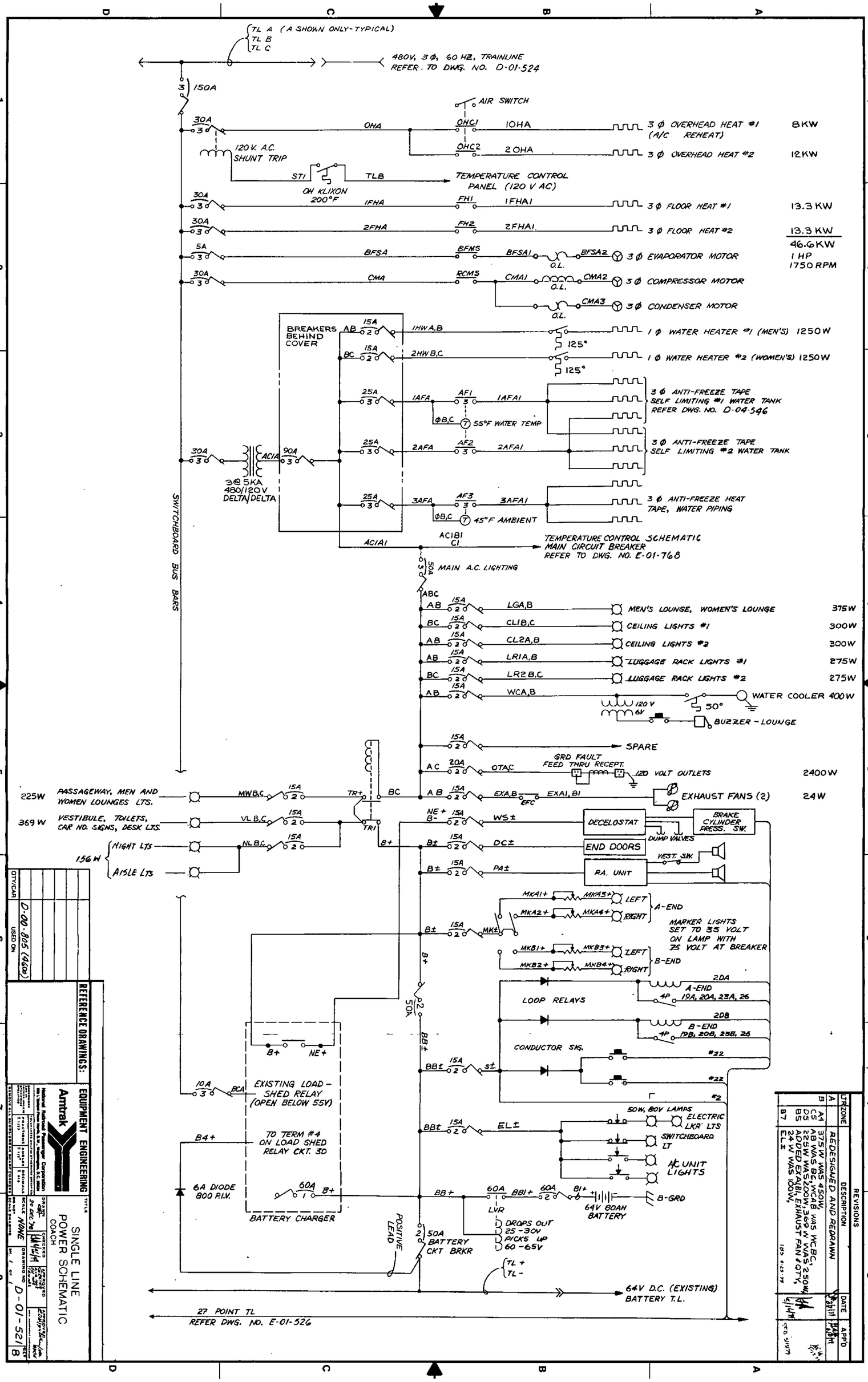
TL A (A SHOWN ONLY-TYPICAL)
TL B
TL C
480V, 3 Φ, 60 HZ, TRAINLINE
REFER. TO DWG. NO. D-01-524
150A
AIR SWITCH
OHA
OHC1
10HA
3 Φ OVERHEAD HEAT #1 (A/C REHEAT)
8KW
OHC2
20HA
3 Φ OVERHEAD HEAT #2
12KW
120 V. A.C. SHUNT TRIP
ST1
TLB
TEMPERATURE CONTROL PANEL (120 V AC)
OH KLIXON 200°F
1FHA
FH1
1FHA1
3 Φ FLOOR HEAT #1
13.3 KW
2FHA
FH2
2FHA1
3 Φ FLOOR HEAT #2
13.3 KW
46.6 KW
1 HP
1750 RPM
BFSA
BFMS
BFSA1
BFSA2
O.L.
3 Φ EVAPORATOR MOTOR
CMA
RCMS
CMA1
CMA2
3 Φ COMPRESSOR MOTOR
CMA3
3 Φ CONDENSER MOTOR
BREAKERS BEHIND COVER
1HW A,B
1 Φ WATER HEATER #1 (MEN'S) 1250W
125°
2HW B,C
1 Φ WATER HEATER #2 (WOMEN'S) 1250W
1AFA
AF1
1AFA1
3 Φ ANTI-FREEZE TAPE SELF LIMITING #1 WATER TANK REFER DWG. NO. D-04-546
55°F WATER TEMP
2AFA
AF2
2AFA1
3 Φ ANTI-FREEZE TAPE SELF LIMITING #2 WATER TANK
3@5KA 480/120V DELTA/DELTA
3AFA
AF3
3AFA1
3 Φ ANTI-FREEZE HEAT TAPE, WATER PIPING
45°F AMBIENT
AC1A1
AC1B1 C1
TEMPERATURE CONTROL SCHEMATIC MAIN CIRCUIT BREAKER REFER TO DWG. NO. E-01-768
SWITCHBOARD BUS BARS
MAIN A.C. LIGHTING
LGA,B
MEN'S LOUNGE, WOMEN'S LOUNGE
375W
CL1B,C
CEILING LIGHTS #1
300W
CL2A,B
CEILING LIGHTS #2
300W
LR1A,B
LUGGAGE RACK LIGHTS #1
275W
LR2B,C
LUGGAGE RACK LIGHTS #2
275W
WCA,B
WATER COOLER 400W
120 V 6V
50°
BUZZER - LOUNGE
SPARE
GRD FAULT FEED THRU RECEPT.
OTA,C
120 VOLT OUTLETS
2400W
225W PASSAGEWAY, MEN AND WOMEN LOUNGES LTS.
MWB,C
TR+
BC
EXA,B
EXA1, B1
EFC
EXHAUST FANS (2)
24W
369 W VESTIBULE, TOILETS, CAR NO. SIGNS, DESK LTS.
VL B,C
TR1
NE+ B-
WS±
DECELOSTAT
BRAKE CYLINDER PRESS. SW.
DUMP VALVES
156 W NIGHT LTS
AISLE LTS
NL B,C
B+
DC±
END DOORS
VEST. SW.
PA±
RA. UNIT
MKA1+
MKA3+
LEFT
MKA2+
MKA4+
RIGHT
A-END
MARKER LIGHTS SET TO 35 VOLT ON LAMP WITH 75 VOLT AT BREAKER
MK±
MKB1+
MKB3+
MKB2+
MKB4+
B-END
LOOP RELAYS
2DA
A-END
4P 19A, 20A, 23A, 26
2DB
B-END
4P 19B, 20B, 23B, 26
CONDUCTOR SIG.
#22
#2
50A
BB±
S±
EXISTING LOAD-SHED RELAY (OPEN BELOW 55V)
10A
BCA
50W, 80V LAMPS
ELECTRIC LKR LTS
EL±
SWITCHBOARD LT
A/C UNIT LIGHTS
B4+
TO TERM #4 ON LOAD SHED RELAY CKT. 3D
6A DIODE 800 P.I.V.
60A
BB+
BB1+
B1+
64V 80AH BATTERY
B-GRD
LVR
DROPS OUT 25-30V PICKS UP 60-65V
BATTERY CHARGER
POSITIVE LEAD
50A BATTERY CKT BRKR
TL +
TL -
64V D.C. (EXISTING) BATTERY T.L.
27 POINT TL
REFER DWG. NO. E-01-526
REFERENCE DRAWINGS:
D-00-805 (4600)
OTY/CAR
USED ON
EQUIPMENT ENGINEERING
Amtrak
National Railroad Passenger Corporation
TITLE
SINGLE LINE POWER SCHEMATIC
COACH
SCALE NONE
DRAWING NO. D-01-521
REV B
REVISIONS
LTR ZONE DESCRIPTION DATE APP'D
A REDESIGNED AND REDRAWN
B A4 375W WAS 450W, AB WAS BC, WCAB WAS WCBC, C5 225W WAS 200W, 369 W WAS 250W, D5 ADDED EXA1B1, EXHAUST FAN & QTY, B5 24 W WAS 100W, B7 EL±

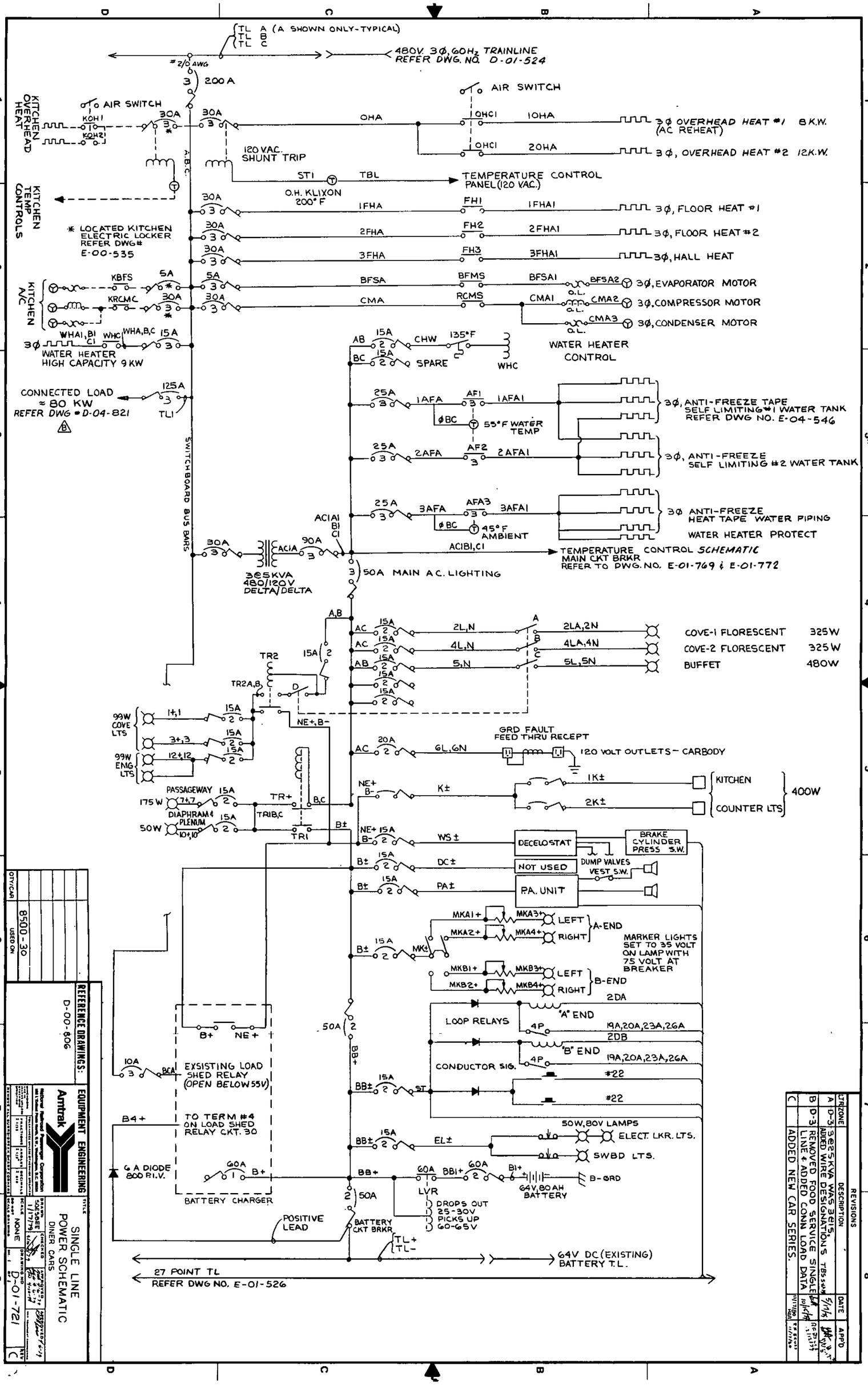

TL A (A SHOWN ONLY-TYPICAL)
TL B
TL C
480V. 3Ø, 60Hz TRAINLINE
REFER DWG. NO. D-01-524
#2/0 AWG
200 A
AIR SWITCH
KITCHEN OVERHEAD HEAT
KOH1
KOH2
30A
OHA
OHC1
10HA
3Ø OVERHEAD HEAT #1 8K.W. (AC REHEAT)
20HA
3Ø, OVERHEAD HEAT #2 12K.W.
120 VAC. SHUNT TRIP
A.B.C.
ST1
TBL
TEMPERATURE CONTROL PANEL (120 VAC.)
O.H. KLIXON 200° F
KITCHEN TEMP CONTROLS
1FHA
FH1
1FHA1
3Ø, FLOOR HEAT #1
2FHA
FH2
2FHA1
3Ø, FLOOR HEAT #2
3FHA
FH3
3FHA1
3Ø, HALL HEAT
* LOCATED KITCHEN ELECTRIC LOCKER REFER DWG# E-00-535
KITCHEN A/C
KBFS
5A
BFSA
BFMS
BFSA1
BFSA2
3Ø, EVAPORATOR MOTOR
KRCMC
CMA
RCMS
CMA1
CMA2
3Ø, COMPRESSOR MOTOR
CMA3
3Ø, CONDENSER MOTOR
O.L.
WHA1, B1 C1
WHC
WHA, B, C
15A
3Ø
WATER HEATER HIGH CAPACITY 9 KW
AB
CHW
135°F
WHC
WATER HEATER CONTROL
BC
SPARE
CONNECTED LOAD ≈ 80 KW
REFER DWG # D-04-821
125A
TL1
25A
1AFA
AF1
1AFA1
ØBC
55°F WATER TEMP
3Ø, ANTI-FREEZE TAPE SELF LIMITING #1 WATER TANK REFER DWG NO. E-04-546
2AFA
AF2
2AFA1
3Ø, ANTI-FREEZE SELF LIMITING #2 WATER TANK
3AFA
AFA3
3AFA1
45°F AMBIENT
3Ø ANTI-FREEZE HEAT TAPE WATER PIPING
WATER HEATER PROTECT
SWITCHBOARD BUS BARS
AC1A1 B1 C1
AC1A
90A
AC1B1, C1
TEMPERATURE CONTROL SCHEMATIC
MAIN CKT BRKR
REFER TO DWG. NO. E-01-769 & E-01-772
3@5KVA 480/120V DELTA/DELTA
50A MAIN A.C. LIGHTING
A,B
AC
2L,N
2LA,2N
COVE-1 FLORESCENT 325W
4L,N
4LA,4N
COVE-2 FLORESCENT 325W
AB
5,N
5L,5N
BUFFET 480W
TR2
TR2A,B
D
99W COVE LTS
1+,1
3+,3
99W ENG LTS
12+,12
NE+, B-
GRD FAULT FEED THRU RECEPT
20A
6L,6N
120 VOLT OUTLETS - CARBODY
PASSAGEWAY
175W
7+,7
DIAPHRAM & PLENUM
50W
10+,10
TR+
TR1B,C
TR1
B±
NE+ B-
K±
1K±
2K±
KITCHEN
COUNTER LTS
400W
WS±
DECELOSTAT
BRAKE CYLINDER PRESS S.W.
DC±
NOT USED
DUMP VALVES VEST S.W.
PA±
P.A. UNIT
MKA1+
MKA3+
LEFT
MKA2+
MKA4+
RIGHT
A-END
MARKER LIGHTS SET TO 35 VOLT ON LAMP WITH 75 VOLT AT BREAKER
MK±
MKB1+
MKB3+
MKB2+
MKB4+
B-END
2DA
LOOP RELAYS
"A" END
4P
19A,20A,23A,26A
2DB
"B" END
CONDUCTOR SIG.
#22
50A
BB+
B+
NE+
10A
BCA
EXSISTING LOAD SHED RELAY (OPEN BELOW 55V)
B4+
TO TERM #4 ON LOAD SHED RELAY CKT. 30
BB±
ST
50W, 80V LAMPS
EL±
ELECT. LKR. LTS.
SWBD LTS.
6 A DIODE 800 P.I.V.
60A
B+
BB+
BB1+
B1+
B-GRD
64V, 80 AH BATTERY
LVR
DROPS OUT 25-30V PICKS UP 60-65V
BATTERY CHARGER
POSITIVE LEAD
BATTERY CKT BRKR
TL+
TL-
64V DC (EXISTING) BATTERY T.L.
27 POINT TL
REFER DWG NO. E-01-526
REVISIONS
LTR ZONE DESCRIPTION DATE APP'D
A D-3 3@25KVA WAS 3@15, ADDED WIRE DESIGNATIONS TBS
B D-3 REMOVED FOOD SERVICE SINGLE LINE & ADDED CONN LOAD DATA
C ADDED NEW CAR SERIES.
REFERENCE DRAWINGS: D-00-806
EQUIPMENT ENGINEERING
Amtrak
SINGLE LINE POWER SCHEMATIC
DINER CARS
D-01-721
8500-30

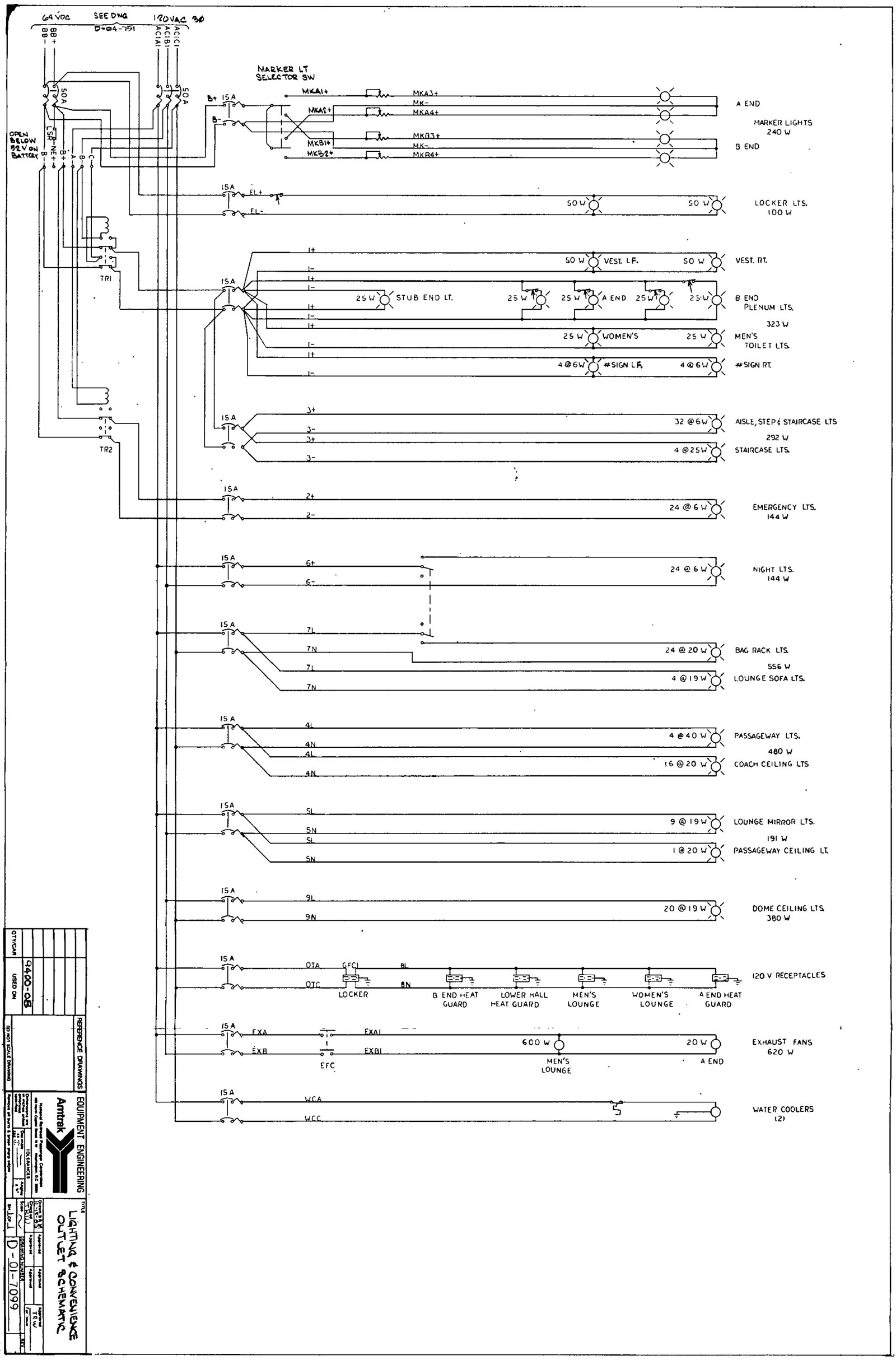
64 VDC
SEE DWG D-04-751
120 VAC 3Ø
BB+
BB-
ACIA1
ACIB1
ACIC1
50A
OPEN BELOW 52V ON BATTERY
LSR
NE+
B-
A-
B-
C-
MARKER LT SELECTOR SW
B+
15A
B-
MKA1+
MKA2+
MKB1+
MKB2+
MKA3+
MK-
MKA4+
MKB3+
MK-
MKB4+
A END
MARKER LIGHTS 240 W
B END
FL+
FL-
50 W
LOCKER LTS. 100 W
TR1
1+
1-
50 W
VEST. LF.
VEST. RT.
25 W
STUB END LT.
A END
B END PLENUM LTS. 323 W
WOMEN'S
MEN'S TOILET LTS.
4 @ 6W
#SIGN LF.
#SIGN RT.
TR2
3+
3-
32 @ 6W
AISLE, STEP & STAIRCASE LTS 292 W
4 @ 25W
STAIRCASE LTS.
2+
2-
24 @ 6 W
EMERGENCY LTS. 144 W
6+
6-
24 @ 6 W
NIGHT LTS. 144 W
7L
7N
24 @ 20 W
BAG RACK LTS. 556 W
4 @ 19 W
LOUNGE SOFA LTS.
4L
4N
4 @ 40 W
PASSAGEWAY LTS. 480 W
16 @ 20 W
COACH CEILING LTS
5L
5N
9 @ 19 W
LOUNGE MIRROR LTS. 191 W
1 @ 20 W
PASSAGEWAY CEILING LT.
9L
9N
20 @ 19 W
DOME CEILING LTS. 380 W
OTA
OTC
GFCI
8L
8N
LOCKER
B END HEAT GUARD
LOWER HALL HEAT GUARD
MEN'S LOUNGE
WOMEN'S LOUNGE
A END HEAT GUARD
120 V RECEPTACLES
EXA
EXB
EXA1
EXB1
EFC
600 W
MEN'S LOUNGE
20 W
A END
EXHAUST FANS 620 W
WCA
WCC
WATER COOLERS (2)
REFERENCE DRAWINGS
9400-08
QTY/CAR
USED ON
DO NOT SCALE DRAWING
EQUIPMENT ENGINEERING
Amtrak
TITLE
LIGHTING & CONVENIENCE OUTLET SCHEMATIC
D-01-7099

LTR	ZONE	REVISIONS DESCRIPTION	DATE	APPR'D

240 W — MARKER LT — 6C W. EA. — A END — B END — MK A3+ — MK- — MK A4+ — MK B3+ — MK- — MK B4+

100 W — ELEC. LOCKER LT. — 50 W

225 W — CLOSET STUB PASSAGE PLENUM — PWB3 — HATCH S.W. — PWB2 — 25W — PLENUM — 50W PASSAGE — 25W STUB — 25W CLOSET — DOOR SW. — PWB1

20 W — CENTER LT — 1-20

168 W — 8TCC-03 — 8704 — 120 W

EMERGENCY CEILING LTS. — ALL 6 W. EA — EM+ — EM-

450 W — BUFFET SPOT LTS — ALL SPOTS 50 W. EA. — SPB1 — SPB — SW. IN GALLEY — SPC

280 W — LOUNGE CEILING 8704 ONLY — 2-40 — 2-20 — 1-40 — LCB — LCC

560 W — LOUNGE CEILING 8TCC-03 — 1-40 — 1-30 — LCB — LCC

280 W — BUFFET CEILING LEFT — 2-30 — 2-20 — SW. IN GALLEY — BFLA — BFLB — BFLC

280 W — BUFFET CEILING RIGHT — 2-30 — 2-20 — BFRA1 — SW. IN GALLEY — BFRA — BFRB

300 W — COVE LIGHT LEFT — 1-40 — 1-20 — CLLA — CLLB

280 W — COVE LIGHT RIGHT — 1-40 — CLRA — CLRB

640 W — EXHAUST FANS — 20 W — 60C W — EXBI — EXCI — EXB — EXC — EXC

BODY RECPT. — LOCKER RECPT. — OTBI — OTCI — OTB — OTC

MARKER LT. SELECTOR SW. — MKA1+ — MKA2+ — MKB1+ — MKB2+

DOOR SW.

EL+ — EL-

PWB — PWC

CL+ — CL-

EM+ — EM-

SPB1 — SPB — SPC

LCB — LCC

BFLA — BFLB — BFLC

BFRA1 — BFRA — BFRB

CLLA — CLLB

CLRA — CLRB

EXB — EXC — EXBI — EXCI

OTB — OTC — OTBI — OTCI

15A

TR1 — TR1B — TR1C — TR2 — TR2A — TR2B

B+ — B- — BB+ — BB-

SEE DWG D-04-7151

120 VAC 3Ø — ACIC1 — ACIB1 — ACIA1

AC MAIN LIGHTING 50A

64 VDC

50A DC MAIN

OPEN BELOW 64 VDC BATTERY

		REFERENCE DRAWINGS	EQUIPMENT ENGINEERING	TITLE: LIGHTING & CONVENIENCE OUTLET SCHEMATIC BUFFET CAR	
			Amtrak — National Railroad Passenger Corporation, 400 North Capitol Street, N.W. Washington, D.C. 20001	Drawn RWH 10/1/81	Approved
				Checked	Approved
			TOLERANCES: Dimensions are in inches unless otherwise specified. Decimals ±.xx ±.xxx. Angles ± 1°	Scale: NONE	DRAWING NUMBER: D-01-7100
			Remove all burrs & break sharp edges	SHEET 1 OF 1	REV
QTY/CAR	USED ON	DO NOT SCALE DRAWING			
	8700-04				

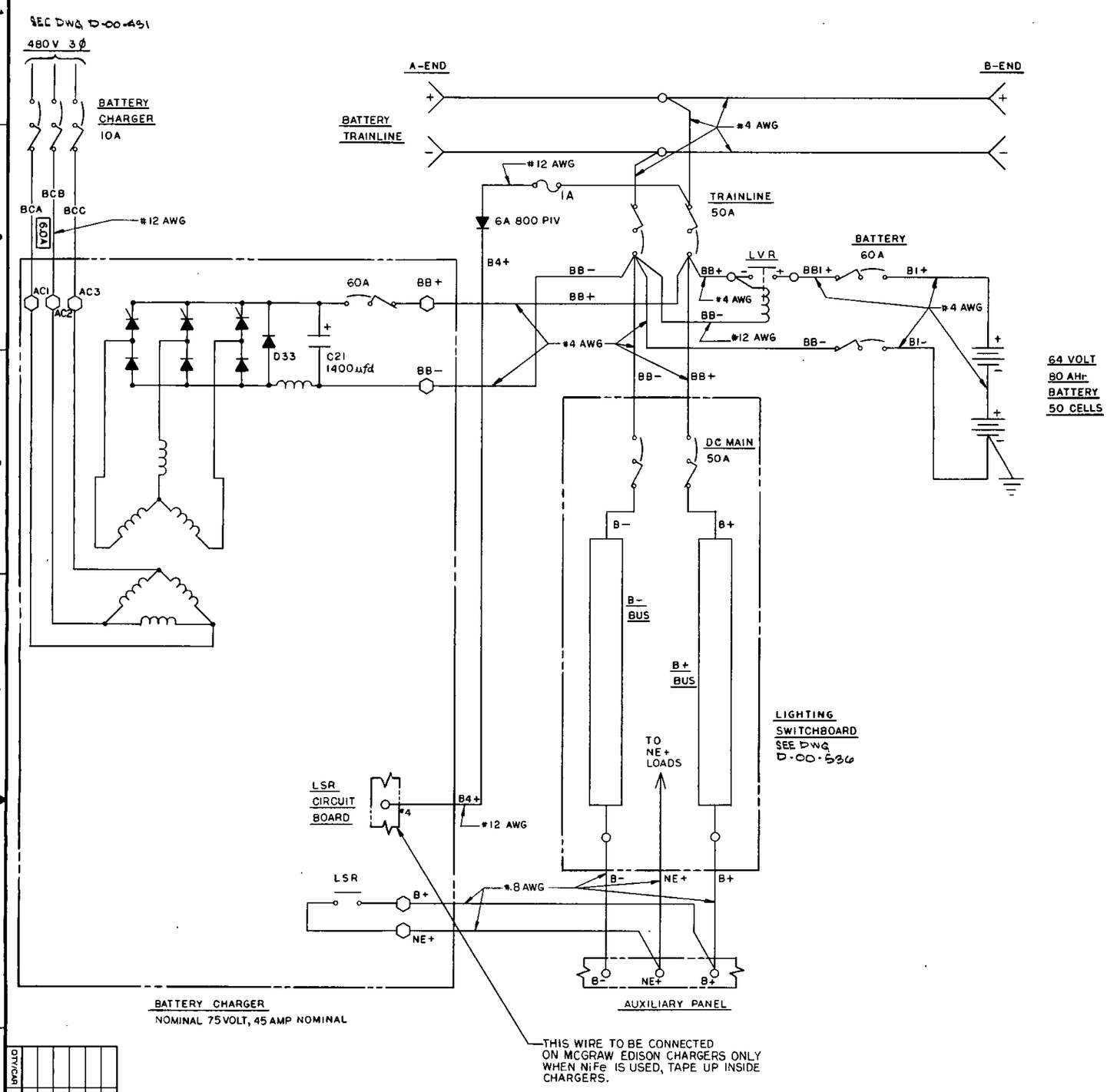

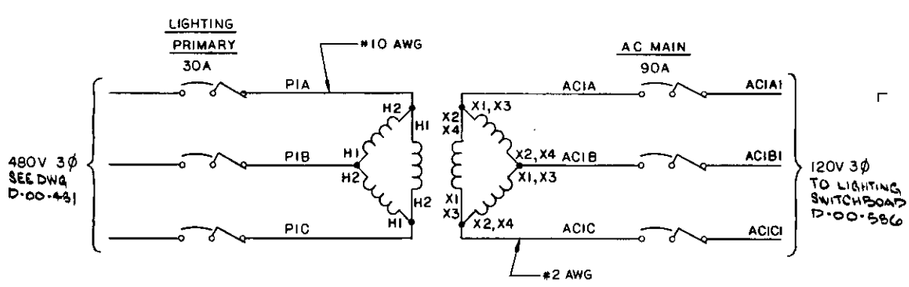

△ LIGHTING TRANS. 480/120 5KVA EA

△ NOT APPLICABLE TO BAGGAGE CARS

QTY/CAR	USED ON
	8100-9411
	1150-2896

REFERENCE DRAWINGS:

EQUIPMENT ENGINEERING

Amtrak

National Railroad Passenger Corporation

TITLE: AC & DC POWER SUPPLY WIRING DIAGRAM 120 VOLT AC & 64 VOLT DC

DRAWN: Sanders 4-6-79 | CHECKED: 4/10/79 | APPROVED: 4-6-79 | APPROVED: 4-6-79

SCALE: NONE | DRAWING NO: D-04-751 C

SHEET 1 OF 1

REVISIONS

LTR	ZONE	DESCRIPTION	DATE	APP'D
A	C2 B6	ADDED FUSE IN B4+ CIRCUIT. ADDED NOTE FOR B4+ ON NiFe CHARGER.	5/7/80 MRB	5/8/80 RF BRUSS
B	C8	ADDED NOTE.	10/30/80 MRB	9-25-80 RF BRUSS
C		ADDED REF NOTES & CAR NUMBERS	3-25-81	4-8-81 RF BRUSS

58

REVISIONS			
LTR	ZONE	DESCRIPTION	DATE

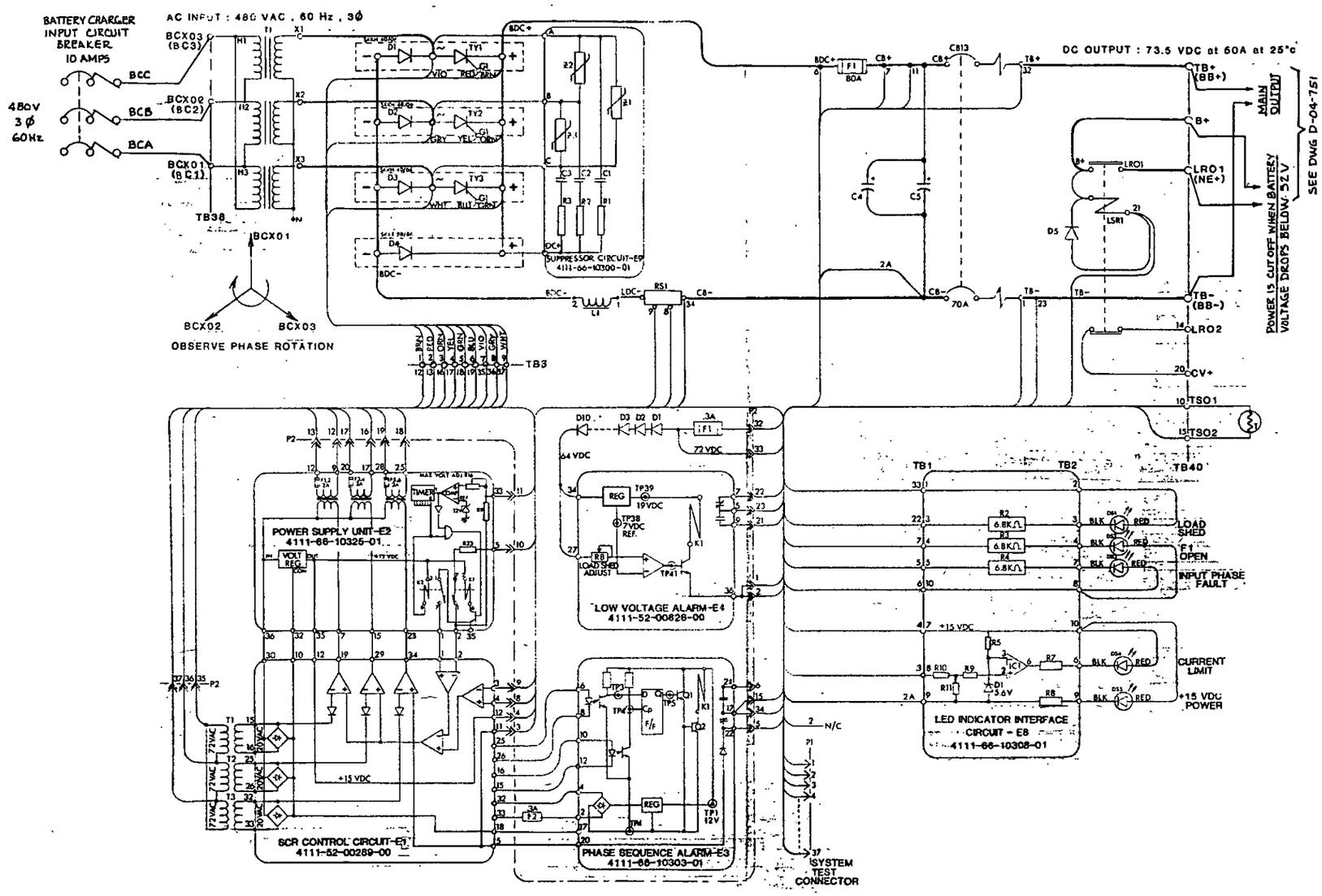

TROUBLESHOOTING PROCEDURE

STEP I: IF "INPUT PHASE FAULT" LED IS ON:

A. CHECK THAT 480 VAC POWER IS ON.
B. TURN OFF AC BREAKER AND REVERSE, ANY TWO AC INPUT LEADS BCO 12 OR BCO 13.
C. CHECK FUSE F2 ON MOTHERBOARD E7-P/N 4111-66-10309-01. IF OPEN, REPLACE WITH USMA FUSE.

D. IF LED STILL ON, REPLACE PHASE SEQUENCE ALARM PRINTED CIRCUIT BOARD E3-P/N 4111-66-10303-01.

STEP II: IF "15 VDC POWER" LED IS NOT ON:

A. CHECK THAT 480 VAC POWER IS ON.
B. REPLACE CONTROL E1 P/N 4111-52-00289-000 AND E2 F/N 4111-66-10325-01.

STEP III: IF "F1 OPEN" LED IS ON:

A. CHECK THAT BATTERY IS CONNECTED POSITIVE TO TB + ON TB39 AND BATTERY NEGATIVE TO TB- ON TB39. IF NOT, CONNECT CORRECTLY AND REPLACE FUSE F1. IF CORRECT, PROCEED TO (B).
B. REFER TO MANUAL FOR CHECKING AND ADJUSTING CURRENT LIMIT CIRCUIT. IF CURRENT LIMIT SET PROPERLY PROCEED TO (C).
C. REPLACE CONTROL E1 P/N 4111-52-00289-000 AND E2 4111-66-10325-01.

STEP IV: IF "CURRENT LIMIT" LED IS ON:

A. BATTERY MAY BE DISCHARGED AND REQUIRE CONSTANT CURRENT CHARGING. TO CHECK:

1. REMOVE ALL LOADS FROM THE BATTERY.
2. CHECK BATTERY VOLTAGE. IT SHOULD BE LESS THAN 80VDC. IF GREATER THAN 80VDC, REPLACE CONTROLS CARDS E1-P/N 4111-52-00289-00 AND E2 P/N 4111-66-10325-01.
3. IF LESS THAN 80VDC, REFER TO MANUAL FOR CHECKING AND ADJUSTING CURRENT LIMIT CIRCUIT. IF CURRENT LIMIT SET PROPERLY, PROCEED TO (4).
4. CHECK FOR 12±1 VDC AT TB1 TERMINAL 8 OF LED INDICATOR INTERFACE CIRCUIT E8 P/N 4111-66-10308-01. IF NO GOOD REPLACE CONTROL CARDS E8 P/N 4111-52-00289-00 AND E2 P/N 4111-66-10325-0. IF GOOD, REPLACE E8 P/N 4111-66-10308-01.

STEP V: IF "LOAD SHED" LED IS ON:

A. CHECK BATTERY VOLTAGE BETWEEN TB+ AND TB- TERMINALS OF TB39. IF VOLTAGE IS LESS THAN 64-1VDC, CHECK TEMPERATURE SENSOR FOR AN OPEN OF LOOSE CONNECTION. IF SENSOR IS GOOD REPLACE CONTROL CARDS E1 F/N 4111-52-00289-00 AND E2 F/N 4111-66-10325-01. IF BATTERY VOLTAGE IS GREATER THAN 65VDC, REPLACE :LOW VOLTAGE ALARM: CIRCUIT E4 P/N 4111-52-00626-00.

QTY	PART NUMBER	DESCRIPTION	MATERIAL	MFG/SPEC	P/L ITEM NO	ITEM

LIST OF MATERIAL

REFERENCE DRAWINGS: NIFE BGIE 5100

QTY/CAR | USED ON

DO NOT SCALE DRAWING

EQUIPMENT ENGINEERING — Amtrak — National Railroad Passenger Corporation, 400 North Capitol Street, N.W. Washington, D.C. 20001

TOLERANCES: Dimensions are in inches unless otherwise specified. Decimals .XX +/- . Angles ± 1°. Remove all burrs & break sharp edges.

TITLE: NIFE BATTERY CHARGER SCHEMATIC (BGIE 5100)

Drawn 3/11/94 | Approved | Approved RF Branch | Approved

Checked | Approved | Approved

Scale | DRAWING NUMBER D-01-7119 REV | SH 1 OF 1

MICROFILM RATIO 24 X

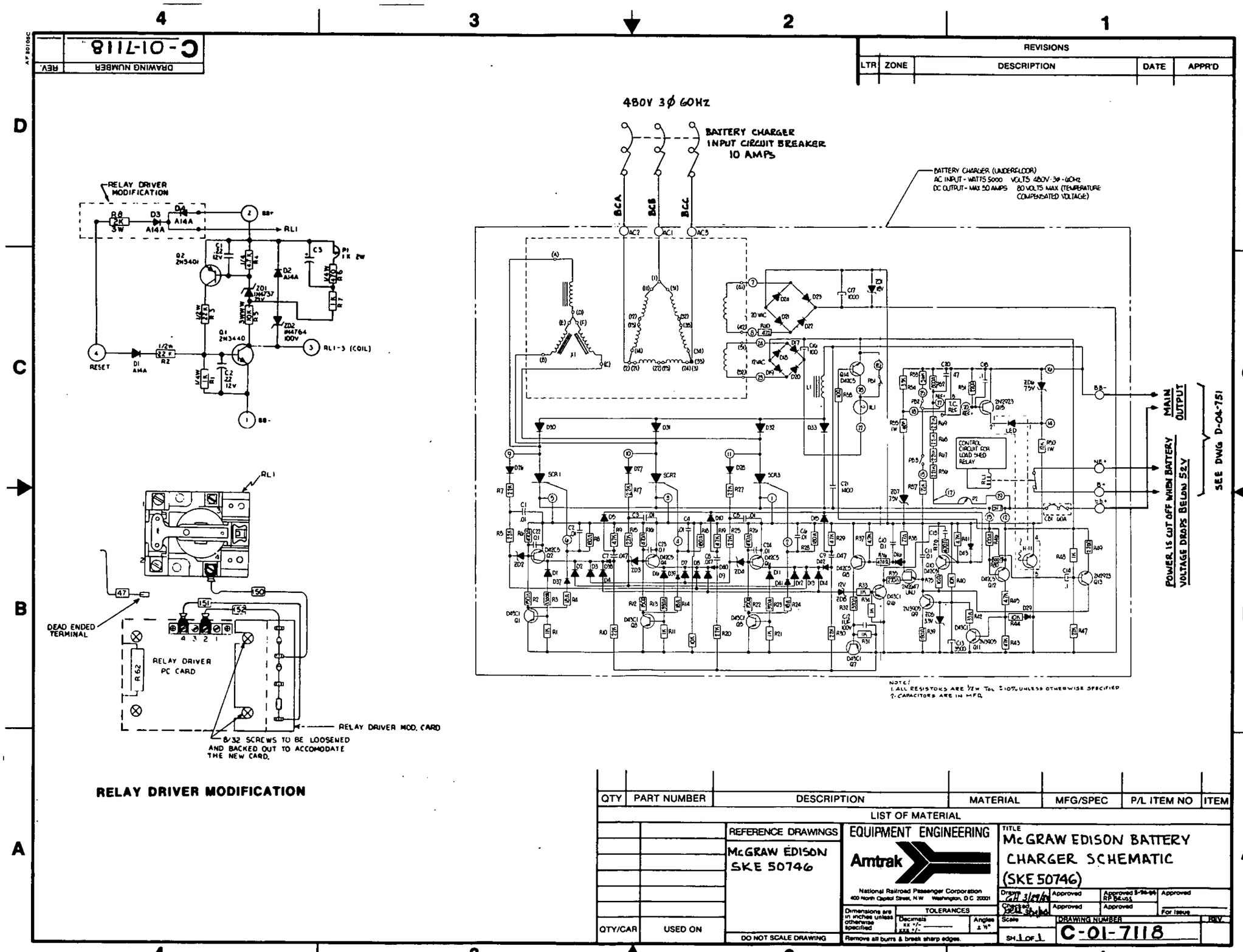

C-01-7118
DRAWING NUMBER
REV.
REVISIONS
LTR
ZONE
DESCRIPTION
DATE
APPR'D
480V 3Ø 60Hz
BATTERY CHARGER
INPUT CIRCUIT BREAKER
10 AMPS
BCA
BCB
BCC
BATTERY CHARGER (UNDERFLOOR)
AC INPUT - WATTS 5000 VOLTS 480V 3Ø 60Hz
DC OUTPUT - MAX 50 AMPS 80 VOLTS MAX (TEMPERATURE COMPENSATED VOLTAGE)
RELAY DRIVER MODIFICATION
RESET
RL1
RL1-3 (COIL)
DEAD ENDED TERMINAL
RELAY DRIVER PC CARD
RELAY DRIVER MOD. CARD
8/32 SCREWS TO BE LOOSENED AND BACKED OUT TO ACCOMODATE THE NEW CARD.
CONTROL CIRCUIT FOR LOAD SHED RELAY
MAIN OUTPUT
POWER IS CUT OFF WHEN BATTERY VOLTAGE DROPS BELOW 52V
SEE DWG D-04-751
NOTE:
1. ALL RESISTORS ARE 1/2W TOL ±10% UNLESS OTHERWISE SPECIFIED
2. CAPACITORS ARE IN MFD.
RELAY DRIVER MODIFICATION
QTY
PART NUMBER
DESCRIPTION
MATERIAL
MFG/SPEC
P/L ITEM NO
ITEM
LIST OF MATERIAL
REFERENCE DRAWINGS
McGRAW EDISON
SKE 50746
EQUIPMENT ENGINEERING
Amtrak
National Railroad Passenger Corporation
400 North Capitol Street, N.W. Washington, D.C. 20001
TITLE
McGRAW EDISON BATTERY CHARGER SCHEMATIC (SKE 50746)
Drawn
Checked
Approved
Approved
Approved
Approved
For Issue
Scale
SH 1 OF 1
DRAWING NUMBER
C-01-7118
REV.
QTY/CAR
USED ON
DO NOT SCALE DRAWING
Dimensions are in inches unless otherwise specified
TOLERANCES
Decimals
Angles
Remove all burrs & break sharp edges.

REVISIONS				
LTR	ZONE	DESCRIPTION	DATE	APP'D
A		CHANGED P/N ON ITEM 7 & ADDED -3 TO L/M		
B		ADDED -4 ASSY AND NOTE 3		
C		ADDED SHEET 2		
D		ADDED CAR NUMBERS		RFD

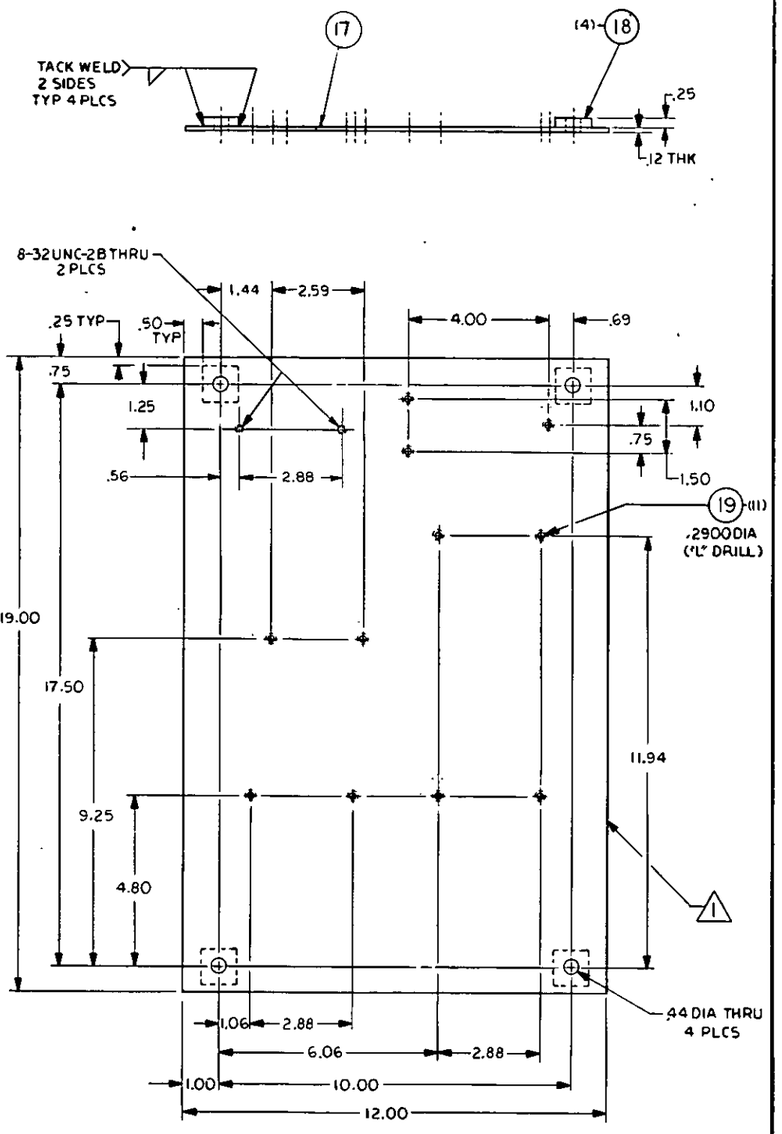

6 PANEL ASSY (WELDMENT)

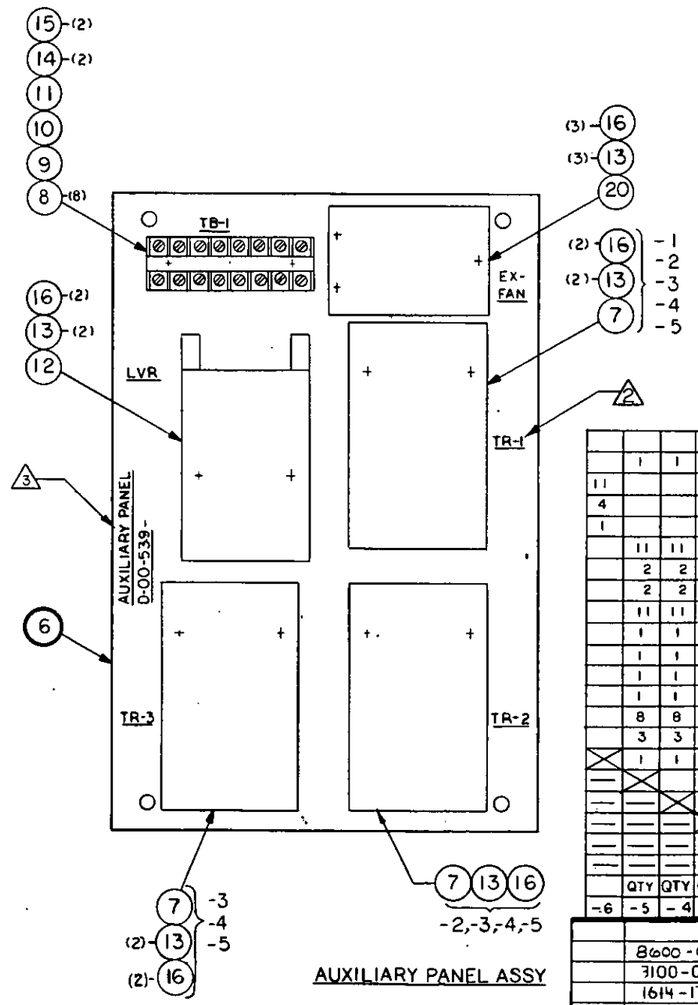

AUXILIARY PANEL ASSY

NOTES:

1. FINISH: ONE (1) COAT PRIMER AND TWO (2) COATS WHITE GLYPTOL PAINT.
2. UNDERLINED LABELS SHALL BE MARKED ON PANEL AFTER PAINTING APPROX AS SHOWN. CHARACTERS SHALL BE .19 HIGH, COLOR BLACK (PERMANENT MARKING)
3. MARK PANEL TO REPRESENT APPLICABLE ASSEMBLY
4. ADDED PANEL ON SHEET NO. 2

QTY/CAR	USED ON
	8600-05
	3100-05
	1614-17
	2880-83
	4600-26

-6	-5	-4	-3	-2	-1	AMTRAK P/N	DESCRIPTION	MFG/MAT'L	PART NO.	ITEM
	1	1	1	—	1		MAGNETIC CONTACTOR, 120V COIL	GE	CR205C022	20
11							NUTSERT, #10-32	AVK	ANS2-1032	19
4						-18	STANDOFF 1.00 X 1.00 X .25	CRS 1020		18
1						-17	PANEL, 19.00 X 12.00 X .12	CRS 1020		17
	11	11	11	9	7		WASHER, SPLIT LK #10	STL		16
	2	2	2	2	2		WASHER, SPLIT LK #8	STL		15
	2	2	2	2	2		SCREW, RH #8-32 X 1/2 LG	STL		14
	11	11	11	9	7		SCREW, RH #10-32 X 1/2 LG	STL		13
	1	1	1	1	1		DC CONTACTOR W/O AUX CONTACTS	VAPOR	36040001	12
	1	1	1	1	1		MARKER STRIP			11
	1	1	1	1	1		TRACK MOUNTING		1492-N2	10
	1	1	1	1	1		END SECTION		1492-N11	9
	8	8	8	8	8		TERMINAL SECTION		1492-CD3130	8
	3	3	3	2	1		CONTACTOR, DPDT	VAPOR	37741141	7
X	1	1	1	1	1	-6	PANEL ASSY (WELDMENT)			6
—	X					-5	AUXILIARY PANEL ASSY 3100-05			5
—	—	X				-4	AUXILIARY PANEL ASSY 1614-17			4
—	—	—	X			-3	AUXILIARY PANEL ASSY 2880-83			3
—	—	—	—	X		-2	AUXILIARY PANEL ASSY			2
—	—	—	—	—	X	-1	AUXILIARY PANEL ASSY 4600-26, 8600-05			1

LIST OF MATERIAL

REFERENCE DRAWINGS:

EQUIPMENT ENGINEERING
Amtrak
National Railroad Passenger Corporation

TITLE: AUXILIARY PANEL ASSEMBLY

DRAWN: 3/28/79 | CHECKED | APPROVED | APPROVED

SCALE: 1/2 | DRAWING NO. D-00-539 | D

61-1

REVISIONS				
LTR	ZONE	DESCRIPTION	DATE	APP'D

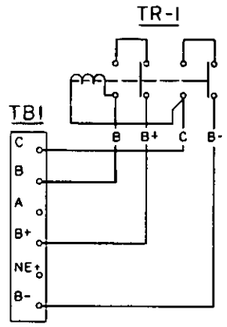

WIRING (COACH)
D-00-539-1

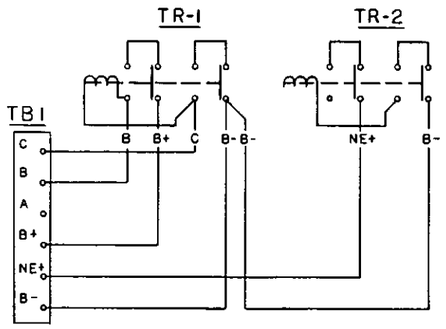

WIRING (DINER)
D-00-539-2

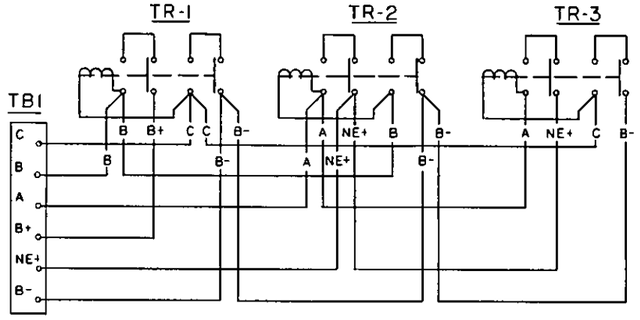

WIRING (SLEEPER-SLUMBER COACH)
D-00-539-3

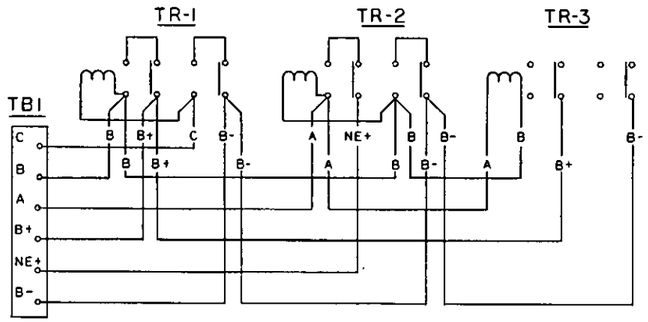

WIRING (BAGGAGE/DORMINTORY)
D-00-539-4

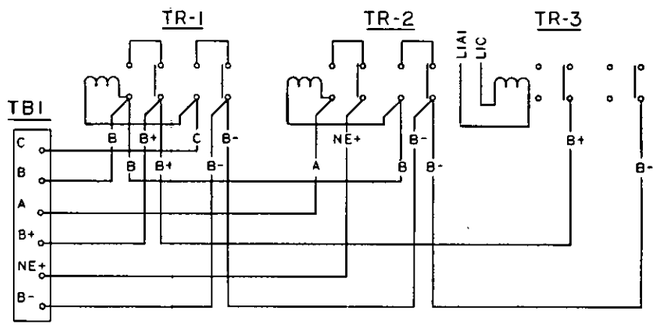

WIRING (LOUNGE)
D-00-539-5

REFERENCE DRAWINGS:	EQUIPMENT ENGINEERING Amtrak National Railroad Passenger Corporation	TITLE AUXILIARY PANEL ASSEMBLY
		DRAWN / CHECKED / APPROVED / APPROVED SCALE NONE DO NOT SCALE DRAWING DRAWING NO D-00-539 C SH. 2 OF 2

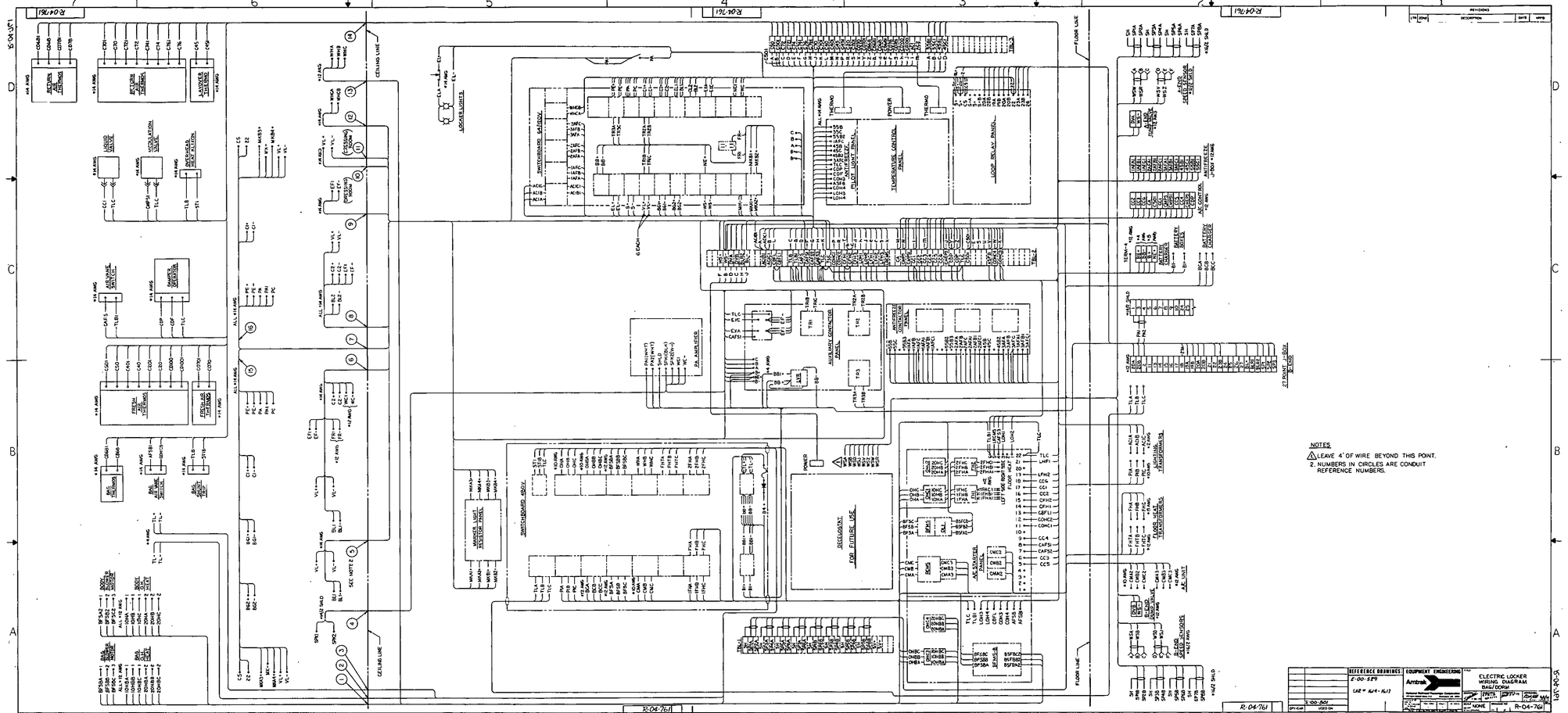

NOTES
1. LEAVE 4' OF WIRE BEYOND THIS POINT.
2. NUMBERS IN CIRCLES ARE CONDUIT REFERENCE NUMBERS.
REFERENCE DRAWINGS
E-00-529
CAR # 1614-1617
EQUIPMENT ENGINEERING
Amtrak
ELECTRIC LOCKER WIRING DIAGRAM DAG/DORM
R-04-761

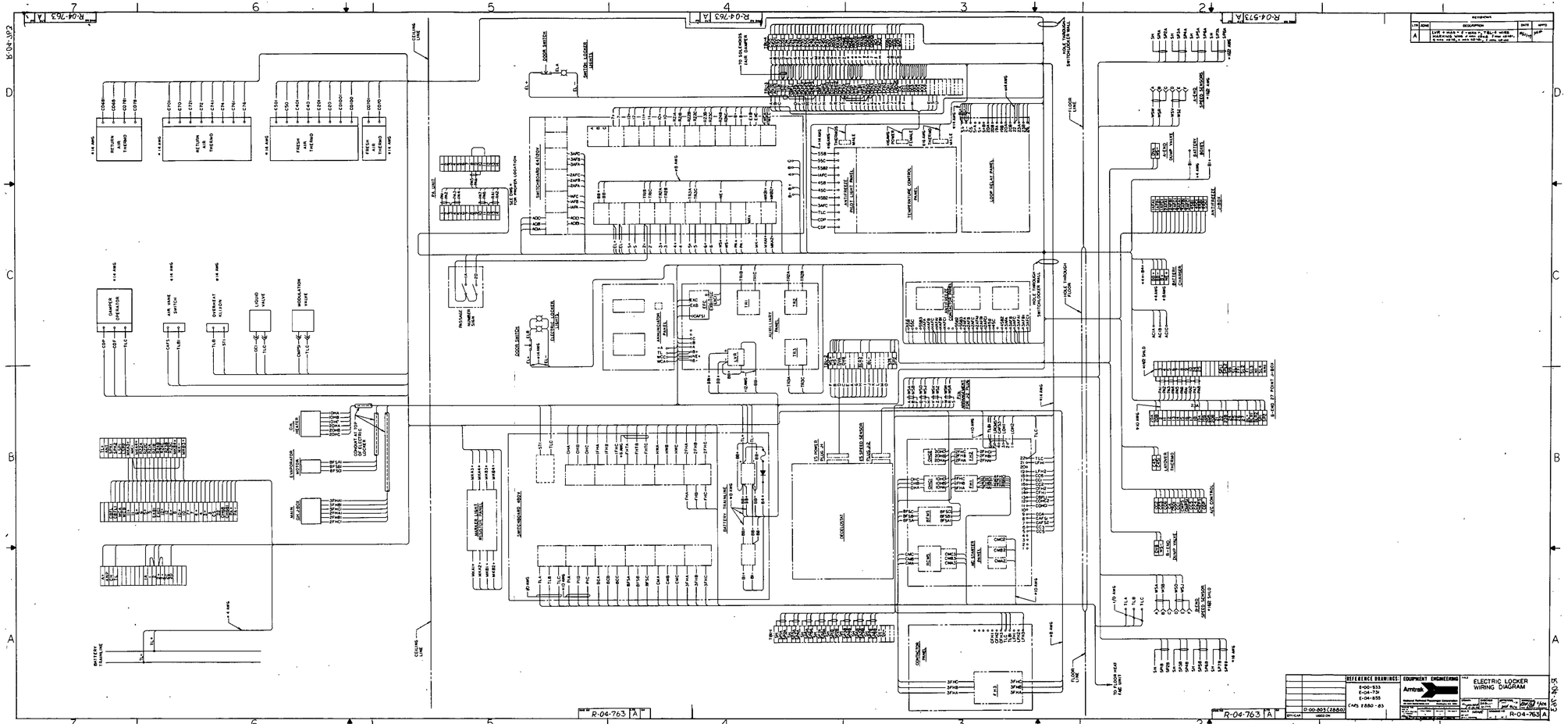
ELECTRIC LOCKER WIRING DIAGRAM
REFERENCE DRAWINGS
EQUIPMENT ENGINEERING
Amtrak
R-04-763 A
63

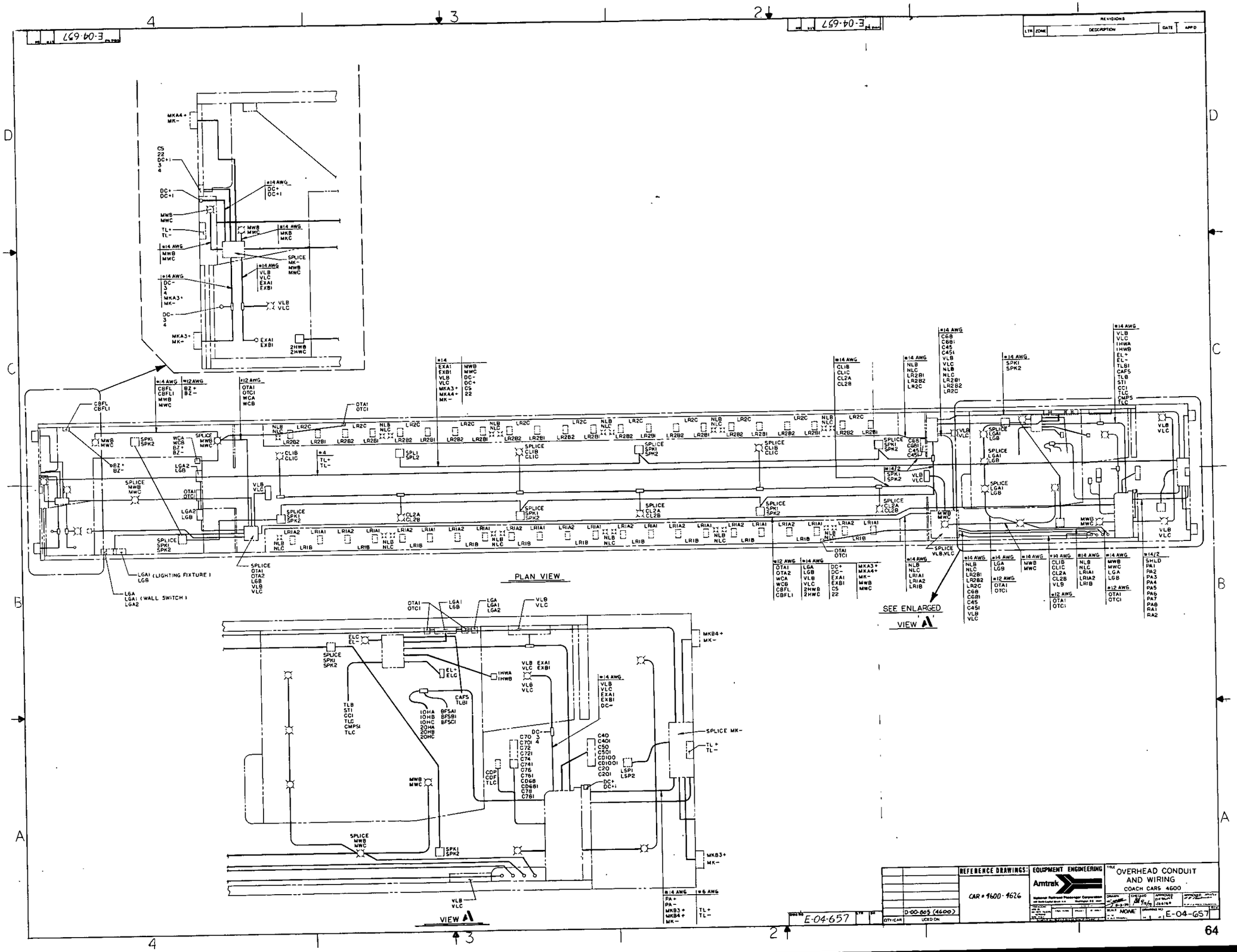

PLAN VIEW
SEE ENLARGED VIEW A
VIEW A
REFERENCE DRAWINGS:
CAR # 4600-4626
EQUIPMENT ENGINEERING
Amtrak
OVERHEAD CONDUIT AND WIRING
COACH CARS 4600
E-04-657

REVISIONS				
LTR	ZONE	DESCRIPTION	DATE	APP'D
A		REDESIGNED AND REDRAWN		
B		ADDED NEW CAR SERIES. HRB	11/3/80	
C		ADDED 9400 CAR SERIES.	9/19/83	R.F. BRUSS
D		ADDED DETAIL A & B. REVISED WIRING FROM DISCONNECT PLUG & RECEPT. TO MAG. SPEED SENSOR PICKUP	9/21/83 HRB	RF BRUSS 9-22-83
E		ADDED CAR NUMBER & REVISED NOTICE.	5/17/84	RF BRUSS

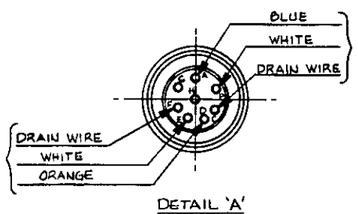

DETAIL 'A'
TRUCK CONNECTOR
FACE VIEW

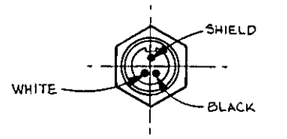

DETAIL 'B'
TRUCK FEMALE CONNECTOR
FACE VIEW

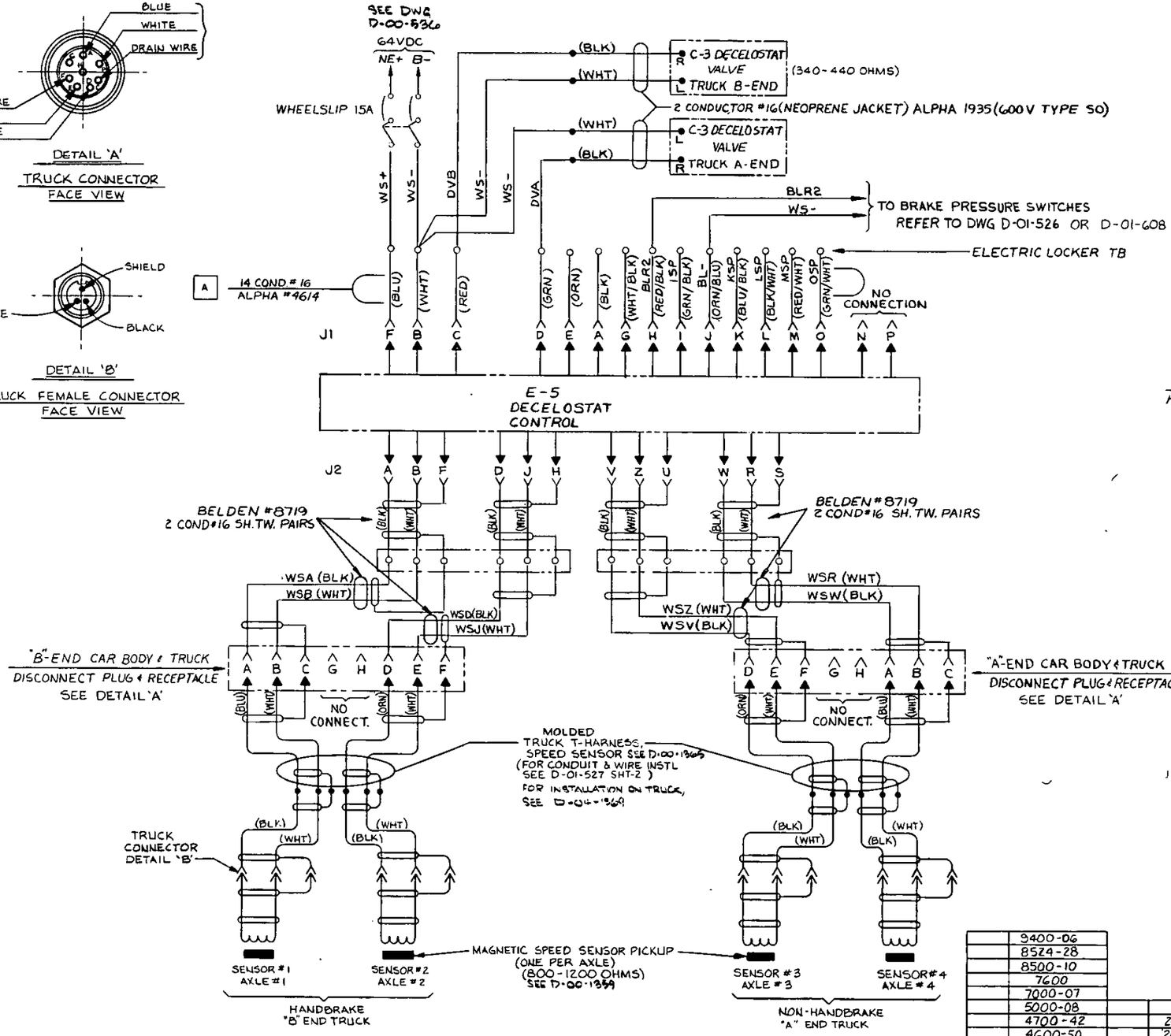

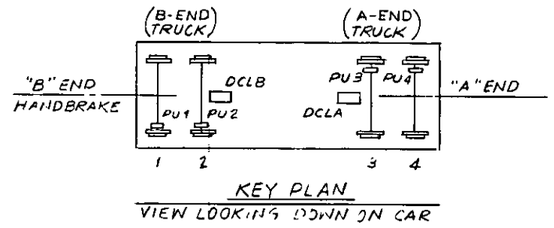

KEY PLAN
VIEW LOOKING DOWN ON CAR

NOTES:
1. O - INDICATES JUNCTION BOX TERMINAL
2. ALL WIRE #12 AWG UNLESS OTHERWISE NOTED.

A TABLE OF HOT JOURNAL WIRES
FUTURE AND OTHER SPARES
2/C #16 TW SHL'D'D PAIRS, BELDEN #8719
AND SIZES LISTED

START	WIRE CODE	DESTINATION (12" SLACK IN BOX, TAPE ENDS
ELECTRIC LOCKER	HJ1A WHT HJ1B BLK	#2 TRUCK, #2 AXLE AREA
DEAD END WIRES ON TERMINAL BLOCK	HJ2A WHT HJ2B	#2 TRUCK, #1 AXLE AREA
	HJ3A WHT HJ3B	#2 TRUCK, #2 AXLE AREA
	HJ4A WHT HJ4B	#2 TRUCK, #1 AXLE AREA
SHIELDS DEAD ENDED AND NOT CONNECT'D	HJ5A WHT HJ5B	#1 TRUCK, #4 AXLE AREA
	HJ6A WHT HJ6B	#1 TRUCK, #3 AXLE AREA
	HJ7A WHT HJ7B	#1 TRUCK, #4 AXLE AREA
	HJ8A WHT HJ8B	#1 TRUCK #3 AXLE AREA
DEAD END E.LK	HJ - #12 WIRE	TRAINLINE WIRE TO PIN #21
DEAD END IN "A" & B ENDS T/L BOXES	STL1, STL2, STL3, STL4 #12 WIRES	4 SPARE WIRES NOT CONNECTED IN CAR

NOTICE

THIS SHEET APPLIES ONLY TO CARS WITH MOLDED T-HARNESS TRUCK WIRING. SEE SHEET 2 FOR CARS WHICH USE DISCRETE WIRE ON THE TRUCKS.

			7620-24		9400-06		2482
	8700-04		9407-11		8524-28		2930-73
	8600-05		9280-95		8500-10		2080-97
	8590		9220-22		7600		1622-25
					7000-07		1170-74
					5000-08		1139
					4700-42		2930-73
					4600-50		2080-97
					4000-26		1622-25
					3112-27		1170-74
					2980-97		1139
					2900-41		1133-36
					2871-94		1128-31
QTY/CAR	USED ON	QTY/CAR	USED ON	QTY/CAR	USED ON	QTY/CAR	USED ON

REF. SH. 1

REFERENCE DRAWINGS:

EQUIPMENT ENGINEERING
Amtrak
National Railroad Passenger Corporation
400 C Street Plaza North, S.W., Washington, D.C. 20024

TITLE: E-5 DECELOSTAT CONTROLLER SYSTEM WIRING DIAGRAM

DRAWN	CHECKED	APPROVED	APPROVED
11/18/79			

SCALE: NONE — DRAWING NO. D-01-527 — REV E — SH 1 OF 2

REVISIONS				
LTR	ZONE	DESCRIPTION	DATE	APP'D
A		REDESIGNED AND REDRAWN		
B		ADDED NEW CAR SERIES. MRB	11/3/80	
C		ADDED 9400 CAR SERIES. MRB	9/19/83	R.F.BRUSS
D		ADDED CAR NUMBERS, & REVISED NOTES.	3/09/84	R.F.BRUSS

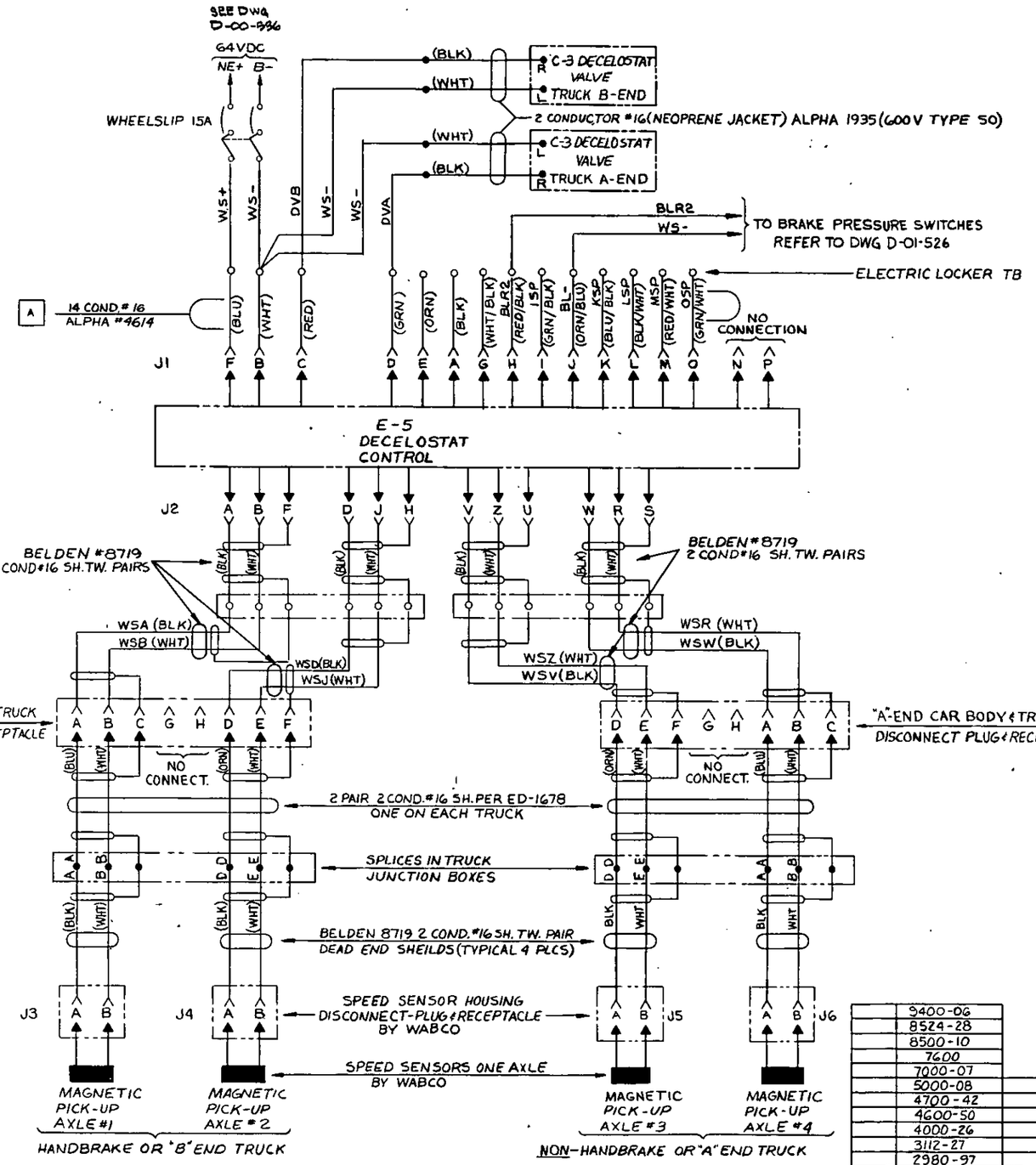

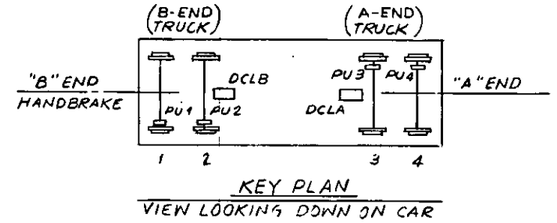

KEY PLAN
VIEW LOOKING DOWN ON CAR

NOTES:
1. O - INDICATES JUNCTION BOX TERMINAL
2. ALL WIRE #12 AWG UNLESS OTHERWISE NOTED.

A TABLE OF HOT JOURNAL WIRES FUTURE AND OTHER SPARES 2/C #16 TW SH'LD'D PAIRS, BELDEN #8719 AND SIZES LISTED

START	WIRE CODE	DESTINATION (12" SLACK IN BOX, TAPE ENDS
ELECTRIC LOCKER	HJ1A WHT HJ1B BLK	#2 TRUCK, #2 AXLE AREA
DEAD END WIRES ON TERMINAL BLOCK	HJ2A WHT HJ2B	#2 TRUCK, #1 AXLE AREA
	HJ3A WHT HJ3B	#2 TRUCK, #2 AXLE AREA
	HJ4A WHT HJ4B	#2 TRUCK, #1 AXLE AREA
SHIELDS DEAD ENDED AND NOT CONNECT'D	HJ5A WHT HJ5B	#1 TRUCK, #4 AXLE AREA
	HJ6A WHT HJ6B	#1 TRUCK, #3 AXLE AREA
	HJ7A WHT HJ7B	#1 TRUCK, #4 AXLE AREA
	HJ8A WHT HJ8B	#1 TRUCK #3 AXLE AREA
DEAD END E.LK	HJ - #12 WIRE	TRAINLINE WIRE TO PIN #21
DEAD END IN "A" & B ENDS T/L BOXES	STL1, STL2, STL3, STL4 #12 WIRES	4 SPARE WIRES NOT CONNECTED IN CAR

NOTICE

THIS SHEET APPLIES ONLY TO CARS WITH DISCRETE WIRED TRUCK WIRING. FOR CARS WITH MOLDED T-HARNESS SEE SHT-1

QTY/CAR	USED ON	QTY/CAR	USED ON
9400-06		2482	
8524-28		2430-73	
8500-10		2080-95	
7600		1622-25	
7000-07		1170-74	
5000-08		1139	
4700-42		1133-36	
4600-50		1128-31	
4000-26			
3112-27			
2980-97			
2900-41			
2871-94			

REFERENCE DRAWINGS:

EQUIPMENT ENGINEERING
Amtrak
National Railroad Passenger Corporation

TITLE: E-5 DECELOSTAT CONTROLLER SYSTEM WIRING DIAGRAM

DRAWN 10/18/79 Quirk
CHECKED
APPROVED
APPROVED

SCALE NONE
DRAWING NO D-01-527
SH 2 OF 2
REV D

DRAWING NO. C-01-715 REV. E

REVISIONS				
LTR	ZONE	DESCRIPTION	DATE	APP'D
A		ADD MICROSWITCH TO CONTACTOR COIL CIRCUIT	7/9/80 HA	RFBRUSS 2/29/80
B		TLC & CVMC WERE WIRED TO VTC & VTN BREAKER	3/28/80	RFBRUSS
C		ADDED NEW CAR SERIES & 15A CIRCUIT BREAKER DESIG.	7/10/80 MRB	RFBRUSS
D		CORRECTED 15A TO 20A PER CMP DRAWING.	1/5/81 MRB	RFBRUSS
E		ADDED CAR NUMBER SERIES	3/24/84	RFBRUSS

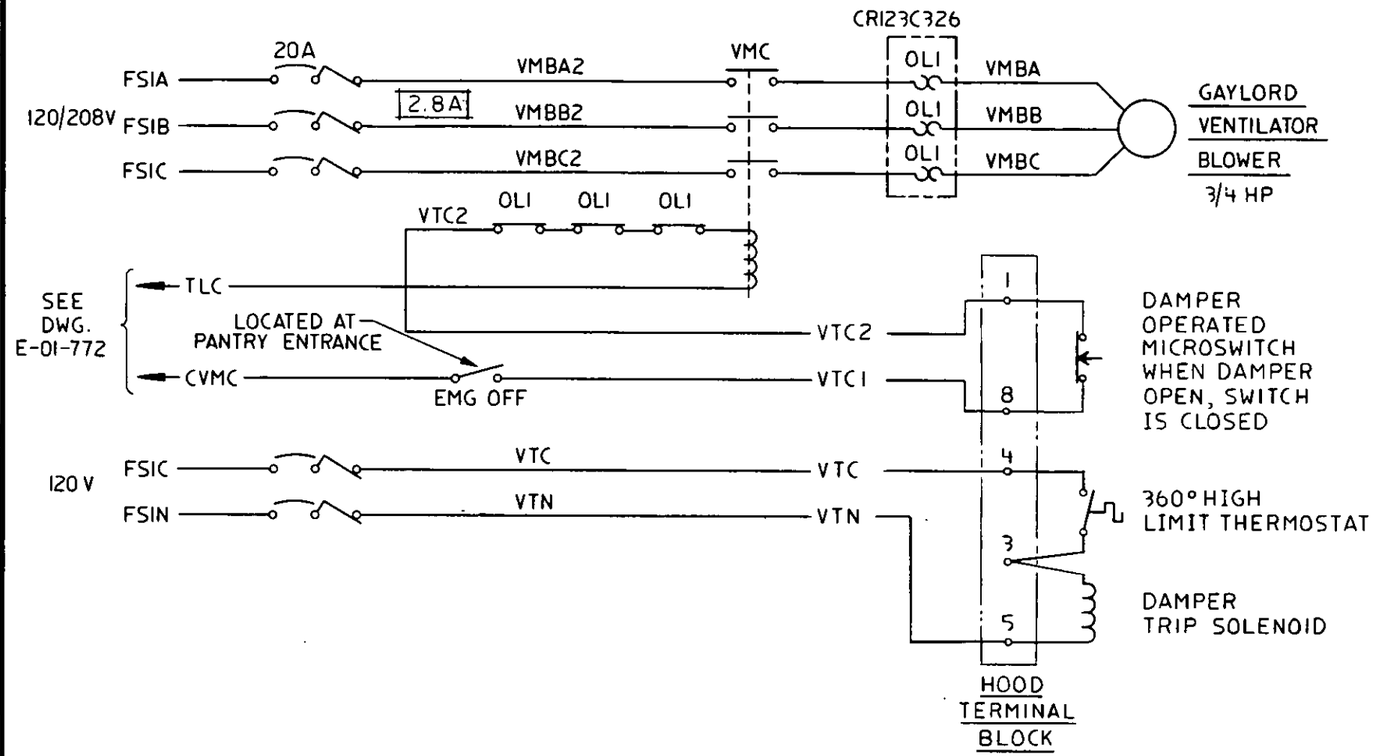

QTY/CAR	USED ON
	8929-30
	8509 - 8528
	8500-8508

REFERENCE DRAWINGS:

EQUIPMENT ENGINEERING

Amtrak

National Railroad Passenger Corporation
400 N Capitol St., Washington, D.C. 20001

DIMENSIONS ARE IN INCHES UNLESS OTHERWISE SPECIFIED. TOLERANCES UNLESS OTHERWISE SPECIFIED: DECIMALS X ±. XX ±. ANGLES ±1/2°. REMOVE ALL BURRS-BREAK SHARP CORNERS

TITLE: GAYLORD VENTILATOR CONTROL SCHEMATIC DINER

DR: [illegible] 1-13-80 APPD: [illegible] APPD: [illegible] APPD FOR ISSUE: [illegible]
CKD: [illegible] APPD: [illegible] APPD: [illegible]
SCALE: NA DRAWING NO. C-01-715 REV. E
SH: 1 OF 1

REVISIONS				
LTR	ZONE	DESCRIPTION	DATE	APPRD
B		REDRAWN & REVISED. TITLE WAS "SCHEMATIC WIRING LOAD DATA" DWG NUMBER WAS D-04-822. M.S.D.	6/11/80	
C		REFINED CURRENT VALUES	7/7/80 M.S.D.	7/27/80

5 228-10-3

480 VOLT TRAINLINE

150A MAIN

A,B,C → HEATING & A/C WIRING WIRING, LIGHTING, & CONV. OUTLETS

60A FOOD SERVICE PRIMARY

FULL LOAD 43.3A — FSA,B,C

3@15 KVA = 45 KVA — 480V

208/120V — FSN

FSN FSIA1 B1 C1

150 A FOOD SERVICE SECONDARY

CONNECTED LOAD 99.6A — FSN,FSIA,B,C

TRANSFER CONTACTOR NEMA-2 — FSTC

FS2A3,B3,C3 — C581

STANDBY POWER 50A

208/120V — A,B,C — 220V

220V 100A STANDBY RECEPTACLES

30 TRANS 15 KVA

NORM — STANDBY

FS2A1,B1,C1

50A FOOD PRESERVATION

81.0A

18.6A

FSN FS2A,B,C

					DUTY CYCLE						DUTY CYCLE
A,B,C	50A	22.8A	GA,B,C	5	208V	GRIDDLE (FUTURE)	(8000 VA)	(4000 VA)			
B,C,N	30A	27.4A	CO1B,C,N	6	120/208V	CONVECTION OVEN #1	5700 VA	2850 VA			
A,B,N	30A	27.4A	CO2A,B,N	7	120/208V	CONVECTION OVEN #2	5700 VA	2850 VA			
A,B,N	30A	13.4A	CBA,B,N	8	208V	COFFEE BREWER	2780 VA	695 VA			
A,B,C	30A	22.2A	CUA,B,C	9	208V	COFFEE URN	8000 VA	4000 VA			
A,N	15A	3.0A	CCUA,N	33	120V	COFFEE URN CONTROL	360 VA	90 VA			
A,B,C	15A	VBMA2,B2,C2 VMC VBMA1,B1,C1	2.8A	VBMA,B,C	10	208V	GAYLORD VENTILATOR (FUTURE)	(1000 VA)	(1000 VA)		
C,N	15A	—	VTC,N	11	120V	VENTILATION THERMOSTAT (FUTURE)	—	—			
B,C	15A	13.0A	MOB,C	12	208V	MICROWAVE OVEN	2700 VA	1350 VA			
A,C	15A	9.6A	FWTA,C	13	208V	FOOD WARMER	2000 VA	1000 VA			
A,C	15A	12.5A	TIA,C	14	208V	TOASTER	2000 VA	500 VA			
B,N	20A	—	DRIB,N	15	120 V	RECEPTACLE #1	—	—			
						NON-VITAL	29.24 KVA	13.34 KVA			
						FOOD PRESERVATION	6.70 KVA	6.70 KVA			
						TOTAL	35.94 KVA CONNECTED LOAD	20.04 KVA ESTIMATED DUTY CYCLE LOAD			

C,N	20A	—	DR2C,N	16	120V	RECEPTACLE #2	—				
A,N	15A	24A	REC1A,N	17	120V	2 DOOR REF. EVAP. COIL #1	290 VA				
A,N	15A	24A	REC2A,N	18	120V	2 DOOR REF. EVAP. COIL #2	290 VA				
A,N	15A	24A	REC3A,N	19	120V	2 DOOR REF. EVAP. COIL #3	290 VA				
B,N	15A	24A	REC4B,N	20	120V	2 DOOR REF. EVAP. COIL #4	290 VA				
C,N	15A	24A	REC5C,N	21	120V	2 DOOR REF. EVAP. COIL #5	290 VA				
C,N	15A	1.7A	REC6C,N	22	120V	REF. DISPLAY EVAP. COIL #6	200 VA				
A,N	15A	NORMAL DEFROST 2.7A/4.6A	FEC1A,N	23	120V	2 DOOR FREEZER EVAP. COIL #1	320 VA				
B,N	15A	2.7A/4.6A	FEC2B,N	24	120V	2 DOOR FREEZER EVAP. COIL #2	320 VA				
C,N	15A	2.3A/4.6A	FEC3C,N	25	120V	2 DOOR FREEZER EVAP. COIL #3	280 VA				
B,N	15A	2.7A/4.6A	FEC4B,N	26	120V	2 DOOR FREEZER EVAP. COIL #4	320 VA				
A,N	20A	8.6A	RC1A,N	27	120V	REF. COMP. #1	1030 VA				
B,N	20A	8.6A	RC2B,N	28	120V	REF. COMP. #2	1030 VA				
A,C	20A	8.4A	FCA,C	29	208V	REF. COMP #3	1750 VA				
						TOTAL	6.70 KVA	6.70 KVA DUTY CYCLE OF 1 ASSUMED			

FEED FROM EXHAUST FAN CONTACTOR ← 1EXIA,C 15A — VFA,C 46A — 31 — 120 V — VENTILATION FAN CONVECTION OVENS 245 CFM — 55 VA

QTY	PART NUMBER	DESCRIPTION	MATERIAL	MFG/SPEC	ITEM
		LIST OF MATERIAL			

REFERENCE DRAWINGS: 3106-3111, 3100-3105

EQUIPMENT ENGINEERING — Amtrak

SINGLE LINE FOOD SERVICE LOUNGE

SCALE NONE — E-01-822 — C

MICROFILM RATIO 30X

67

E-01-821

LTR	ZONE	DESCRIPTION	DATE	APPRD
B		REDRAWN & REVISED TITLE WAS "SCHEMATIC WIRING LOAD DATA" DWG NUMBER WAS D-04-821	6-7-91	RFE
C		REFINED CURRENT VALUES. ECO	12/9/20	RFE 9/7
D		GAYLORD VENTILATOR CIRCUIT BREAKER WAS 15A	4/5/21	RFE 4/26
E		CHANGED CONVECTION OVENS TO 30 FROM 10 ALSO CHANGED OVENS FROM 5-7 TO 6.4 KW	9/17/96	EFREUS 5-27-98

480 VOLT TRAINLINE

200A MAIN

A,B,C → HEATING & A/C WIRING WIRING, LIGHTING, & CONV. OUTLETS

125A FOOD SERVICE PRIMARY

FULL LOAD 86.6A — FSA, FSB, FSC

30.25 KVA = 75 KVA — 480V

208/120V

FSN, FSIAI, FSIBI, FSICI — FSN

225A FOOD SERVICE SECONDARY

CONNECTED LOAD 200.0A — FSN, FSIA, B, C

180.0A

TRANSFER CONTACTOR NEMA-2 — FSTC

NORM / STANDBY

FS2A3, B3, C3 — C581

STANDBY POWER 50A

208/120V — A,B,C — 220V

3Ø TRANS 15 KVA

220V 100A STANDBY RECEPTACLES

FS2A1, B1, C1

50A FOOD PRESERVATION

FSN FS2A, B, C

19.8A

					DUTY CYCLE	
ABC 50A	33.4A GA,B,C	5	208V	GRIDDLE	12,000 VA	6000 VA
ABC 30A	17.5A DWA,B,C	6	208V	DISHWASHER	6300 VA	1575 VA
ABC 30A	18.4A CO1A,B,C	7	120/208V	CONVECTION OVEN #1	6400 VA	3200 VA
ABC 30A	18.4A CO2A,B,C	8	120/208V	CONVECTION OVEN #2	6400 VA	3200 VA
ABC 30A	18.4A CO3A,B,C	9	120/208V	CONVECTION OVEN #3	6400 VA	3200 VA
AB-N 30A	13.4A CB1A,B,N	10	120/208V	COFFEE BREWER #1	2780 VA	695 VA
AB-N 30A	13.4A CB2A,B,N	11	120/208V	COFFEE BREWER #2	2780 VA	695 VA
ABC 20A	VBMA2, B2, C2 VMC VBMA1, B1, C1 — 2.8A VBMA,B,C	12	208V	GAYLORD VENTILATOR 850 CFM	1000 VA	1000 VA
CN 15A	— VTC,N	13	120V	VENTILATION THERMOSTAT	—	—
BC 30A	26.0A MOB,C	14	208V	MICROWAVE OVEN	5400 VA	2700 VA
AB 30A	25.0A HPA,B	15	208V	HOT PLATE	5200 VA	2600 VA
AC 30A	19.2A FWTA,C	16	208V	FOOD WARMER TRAY	4000 VA	2000 VA
BC 15A	8.7A FWDB,C	17	208V	FOOD WARMER DRAWER	1800 VA	900 VA
AC 15A	12.5A T1A,C	18	208V	TOASTER #1	2600 VA	650 VA
AC 15A	12.5A T2A,C	19	208V	TOASTER #2	2600 VA	650 VA
BC 15A	— TB,C	20	208V	TOASTER (ALTERNATE)	—	—
CN 15A	4.2A DDC,N	21	120V	DISH DISPENSER	500 VA	250 VA
BN 15A	3.8A SWB,N	22	120V	SOUP WARMER	450 VA	225 VA
CN 20A	2.5A WPC,N	23	120V	WARMING PADS	300 VA	300 VA
AN 20A	— DR1A,N	24	120V	RECEPTACLE #1	—	—
				NON-VITAL	66.91 KVA	29.84 KVA
				FOOD PRESERVATION	7.14 KVA	7.14 KVA
				TOTAL	74.05 KVA CONNECTED LOAD	36.98 KVA ESTIMATED DUTY CYCLE LOAD

					DUTY CYCLE	
BN 20A	— DR2B,N	25	120V	RECEPTACLE #2	—	
AN 15A	.8A REC1A,N	26	120V	REF DRAWER EVAP COIL #1	100 VA	
BN 15A	.8A REC2B,N	27	120V	SANDWICH REF EVAP COIL #2	100 VA	
CN 15A	.8A REC3C,N	28	120V	ICE STORAGE REF EVAP COIL #3	100 VA	
AN 15A	2.4A REC4A,N	29	120V	2 DOOR REF EVAP COIL #4	290 VA	
BN 15A	2.4A REC5B,N	30	120V	2 DOOR REF EVAP COIL #5	290 VA	
CN 15A	2.4A REC6C,N	31	120V	2 DOOR REF EVAP COIL #6	290 VA	
AN 15A	2.4A REC7A,N	32	120V	2 DOOR REF EVAP COIL #7	290 VA	
AN 15A	2.7A4.6A FEC1A,N	33	120V	2 DOOR FREEZER EVAP COIL #1	320 VA	
BN 15A	2.7A4.6A FEC2B,N	34	120V	2 DOOR FREEZER EVAP COIL #2	320 VA	
CN 15A	2.7A4.6A FEC3C,N	35	120V	2 DOOR FREEZER EVAP COIL #3	320 VA	
AN 20A	8.6A RC1A,N	36	120V	REF COMP #1	1030 VA	
BN 20A	8.6A RC2B,N	37	120V	REF COMP #2	1030 VA	
CN 30A	12.5A FCC,N	38	120V	REF COMP #3	1500 VA	
BN 15A	6.3A MCB,N	40	120V	MAITRE'D COOLER	540 VA	
AN 15A	1.85A LA,N	1	120V	CEILING LIGHTS	222 VA	
CN 15A	3.33A HLC,N	2	120V	HEAT LAMP	400 VA	
C.B. ELECTRIC LOCKER 6 K± 5.2A	15A 1K± — 2.9A	3	75V	210W DC COUNTER LTS		
	15A 2K± — 2.3A	4	75V	175W DC COUNTER LTS		
C.B. ELECTRIC LOCKER 12+,12 EL±	WALL SW 12A,12 DOOR SW	5	75V	DC EMERGENCY LTS		
	50W		75V	ELECTRIC LKR LT		

TOTAL 7.14 KVA — KITCHEN AREA SWITCHBOARD — 7.14 KVA DUTY CYCLE OF 1 ASSUMED

	REFERENCE DRAWINGS	EQUIPMENT ENGINEERING	SINGLE LINE FOOD SERVICE DINER
D-00-804 8500-8508		Amtrak	
QTY/CAR — USED ON	DO NOT SCALE DRAWING	SCALE NONE	SHEET 1 OF 1 — E-01-821 — REV E

30X

68

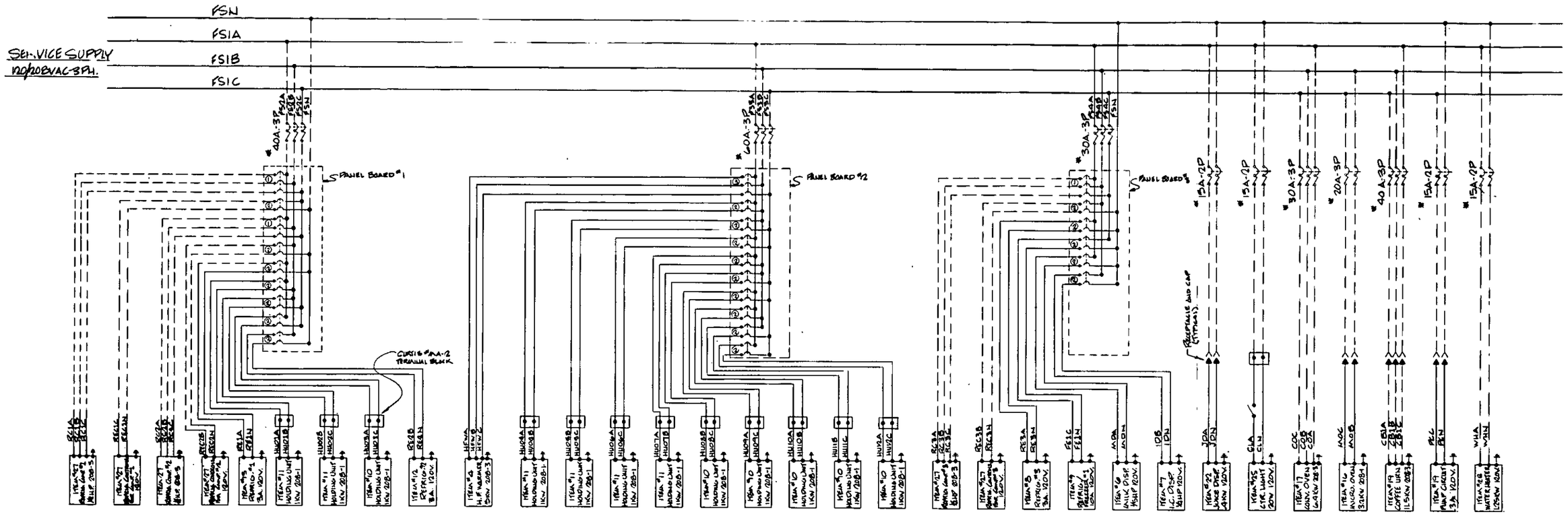

CIRCUIT BREAKER LEGEND			
REF.	RATING	MANUFACTURER	MODEL
1	15A-3P	WESTINGHOUSE	#QC3015H
2	15A-2P	"	#QC2015H
3	20A-3P	"	#QC3020H

NOTES

1. DOTTED LINES DESIGNATE "FIELD" WIRING TO BE PERFORMED BY "CAR BUILDER".
2. POWER DISTRIBUTION TO SERVICE SUPPLY LINE SHALL BE VERIFIED BY CAR BUILDER.
3. EQUIPMENT INTERNAL SCHEMATICS ARE NOT SHOWN ON THIS DRAWING.
4. ASTERISK (*) INDICATES CIRCUIT BREAKERS NOT FURNISHED BY C.M.P.

REV.	DATE	
2	6-20-83	ADDED WIRE MARKERS
1	6-9-83	CHANGED TO 3PH. PANELS

amp
CONTINENTAL METAL PRODUCTS CO. INC.
WOBURN, MASSACHUSETTS 01801

AMTRAK BUFFET CAR # 8700 - 8704
ELECTRICAL SCHEMATIC

DATE	SCALE	DRAWN BY	DRAWING NO.	REV
5-20-83	NONE	PM	D-5861	2

REVISIONS				
LTR	ZONE	DESCRIPTION	DATE	APP'D
A		REMOVED 70A BRKR, ADDED REF DESIGNATIONS	5/11/79	MA
B	ALL	MADE GENERAL CORRECTIONS & RENAMED WIRES.	2/5/80	RFBruss
	B-2	MOVED 225 A BREAKER.		
	C-5	FS2C2 WAS WIRED TO FS2A2 AT BKR FS2A2 WAS WIRED TO FS2C2 AT BKR		
C		ADDED NEW CAR SERIES TO USED ON BLOCK.	6/16/80 MRB	6/16/80 RFBruss
D	A2	ADDED PRIMARY & SECONDARY FOOD SERVICE DESIGNATION.	9/3/80 MRB	9/10/80 RFBruss
	B5	ADDED FOOD PRESERVATION DES		
	D5	STANDBY POWER WAS TRANSFER.		
E		ADDED NEW CAR SERIES.	10/17/80 MRB	10/17/80 RF Bruss
F		ADDED CAR NUMBER SERIES		

FOOD SERVICE PRIMARY

SEE POWER DISTRIBUTION DWG NO. D-01-524

A — FSA
B — FSB
C — FSC
125A

KT

COIL 3 (H4) (H2)(H3)
COIL 2 (H1)(H4) (H2)(H3)
COIL 1 (H1)(H4) (H2)(H3) (H1)

FOOD SERVICE SECONDARY

FS1A — FS1A1
FS1C — FS1B1
FS1B — FS1C1
225 A

(X2) (X4) (H1) (X3)

FOOD SERVICE TRANSFORMER
480 Δ/208 Y/120 VAC - WESTINGHOUSE
3 @ 25 KVA EA = 75 KVA

FSN
FS1A
FS1B
FS1C
CONTINUED SEE DWG NO D-04-821
NON VITAL FOOD SERVICE EQUIP.

FSN
FS2A
FS2B
FS2C
CONTINUED SEE DWG NO D-04-821
FOOD PRESERVATION EQUIP.

FOOD PRESERVATION
50A

FS1A — SC(AUX) (I-N) (I-C) — CN1 — MC (Y) (Z)
SC (Z) (Y) — CSB2
MC AUX (IC) (IN) — CSB1
FS1A — MC (A) (B) — FS2A1 — SC (B) (A) — FS2A2
FS1B — MC (C) (D) — FS2B1 — SC (D) (C) — FS2B2
FS1C — MC (E) (F) — FS2C1 — SC (F) (E) — FS2C2

POWER TRANSFORMER
220/208 Y/120 VAC (1) 15KVA
G.E. # GT2183210
(H1) (H2) (H3) (X1) (X0) (X2) (X3) FSN

TRANSFER CONTACTOR-NEMA 2
WESTINGHOUSE A211K2CA

FS2A3 — FS2A2
FS2B3 — FS2B2
FS2C3 — FS2C2
50A
STANDBY POWER 50 AMPS

PYLE NATIONAL 100 AMP RECEPTACLE RIGHT SIDE
(3) A
(2) B
(1) C
(R) FS2A2
(4) CSB1

PYLE NATIONAL 100 AMP RECEPTACLE LEFT SIDE
(3)
(2)
(1)
(R)
(4)

QTY/CAR	USED ON
	8529-30
	8500-28

REFERENCE DRAWINGS:

EQUIPMENT ENGINEERING
Amtrak
National Railroad Passenger Corporation

TITLE: SYSTEM SCHEMATIC DIAGRAM (FOOD SERVICE POWER)

DRAWN 1/30/79 Cwkard | CHECKED MA 2/4/79 | APPROVED PETS 2/4/79 | APPROVED RA Hopkins

SCALE NONE | DRAWING NO D-01-538 | REV. F

REMOVE ALL BURRS-BREAK SHARP CORNERS

REVISIONS				
LTR	ZONE	DESCRIPTION	DATE	APP'D
A	A3,4,5	ADDED 35° TO THERMOSTATS.	5/7/80 MRB	5/15/80 RP BRUSS
B		ADDED NEW CAR SERIES TO USED ON BLOCK.	6/14/80 MRB	6/16/80 RP BRUSS
C		IMPROVED CURRENT VALUES	7/2/80 MRB	7/7/80 RP BRUSS
D		ADDED NEW CAR SERIES.	11/17/80 MRB	11/17/80 RP BRUSS
E		ADDED DEFROST THERMOSTAT.	5/18/81 TBS	5/27/81 RP BRUSS
F		ADDED KEY PLAN	12/14/83 GA	12-14-83 RP BRUSS

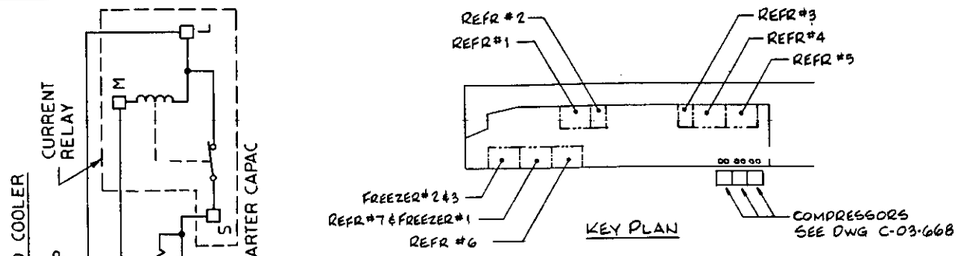

KEY PLAN

COMPRESSORS 1,2,& 3 SEE DWG C-03-668

MAITRE'D COOLER

COMPR 1/4 HP

CURRENT RELAY

STARTER CAPAC

PROTECTOR 35°

COND FAN .6A

PRESS. CONT

PSIG: OPEN 18, CLOSE 35

FAN (1) .5A

30W CONDENSATE HTR

SOLENOID VALVE

FAN (1) .5A

24W CONDENSATE HTR

FANS (3) @.64A

48W CONDENSATE HTR

SOLENOID VALVE

FANS (3) @.64A

80W CONDENSATE HTR

DEFROST HEAT, 500W

DEFROST THERMOSTAT

CFECIA, TFECIA, DFECIA, FECIN

DRAIN HTR, 50W

TIMER

23HR, 40 MIN COOL
20 MIN DEFROST

MCB 5.3A MCN

REC1A .8A REC1N

REC2B .8A REC2N

REC3C .8A REC3N

REC4A 2.4A REC4N

REC5B 2.4A REC5N

REC6C 2.4A REC6N

REC7A 2.4A REC7N

FEC1A 2.7A NORMAL (4.6A DEFROST) FEC1N

FEC2B 2.7A NORMAL (4.6A DEFROST) FEC2N

FEC3C 2.7A NORMAL (4.6A DEFROST) FEC3N

JB2 JB3 JB4 JB6 JB7 JB8

15A

TO KITCHEN XFMR NEUTRAL — FSN

50A

FS2C1 — FS2C

FS2B1 — FS2B

FS2A1 — FS2A

TO TRANSFER CONTACTOR SEE DWG NO. D-01-538

LEGEND

- ○ = CEILING TERMINAL
- ⬡ = COOLER TERMINAL
- □ = TIMER UNIT TERMINAL
- △ = CONDENSER UNIT TERMINAL

QTY/CAR	USED ON
	8500 - 28

REFERENCE DRAWINGS: D-00-806

EQUIPMENT ENGINEERING

Amtrak

National Railroad Passenger Corporation

TITLE: REFRIGERATION SCHEMATIC EVAPORATORS DINER

DRAWN 11/30/79 A.HAIRD

CHECKED R.F.D. 12/3/79

APPROVED

APPROVED 12/15/79

SCALE NONE

DRAWING NO. D-01-793

SH. 1 OF 1

REV F

DO NOT SCALE DRAWING

REMOVE ALL BURRS-BREAK SHARP CORNERS

71

REVISIONS				
LTR	ZONE	DESCRIPTION	DATE	APP'D
A	B,D4	FOR COOLER & FREEZER: ADDED HIGH CLOSE, COND FAN WAS 110.	5/8/80 MRB	5/8/80 RF BRUSS
B	A-C4	REVERSED PRESSURE SWITCHES	6/4/80 MRB	RF BRUSS 6-4-80
C		ADDED NEW CAR SERIES TO USED ON BLOCK.	6/16/80 MRB	6/16/80 RF BRUSS
D		REFINED CURRENT VALUES.	7/2/80 MRB	7/7/80 RF BRUSS
E		CORRECTED PER C.M.P. DRAWING.	5/27/00 MRB	RF BRUSS 10/2/00
F		ADDED KEY PLAN	12/4/03 GA	RF BRUSS 12-16-03

#6 AWG

FOOD PRESERVATION

TO TRANSFER CONTACTOR SEE DWG'S D-01-538 OR D-01-617

FS2A1 — 50A — FS2A

FS2B1 — FS2B

FS2C1 — FS2C

TO KITCHEN TRANSFORMER NEUTRAL

FSN

#2 AWG

BUS

20A — RC1A — #14 10A — #1 BLK — LP — HP — BLK — #2 — PROTECTOR (3, 1) — #C — BLK — COMPRESSOR

RC1N — 8.6A — #10 AWG

1/2 HP REF. COMPR #1

COND FAN PSIG — 50W — CRANK CASE HTR — #R — RED

COND FAN — .8A — RUN — RED

BLK — WHT — START — YEL — #S

DISCHARGE RES — RED — BLU — STARTING CAPAC

1 — 2 — 5 — POTENTIAL RELAY

COOLER

	HIGH	LOW	COND FAN
OPEN	180 PSIG	-8"	90 PSIG
CLOSE	140 PSIG	0	107 PSIG

TABLE PERTAINS TO REF. COMPR #1 & #2

20A — RC2B — #14 10A — #1 BLK — LP — HP — BLK — #2 — PROTECTOR (3, 1) — #C — BLK — COMPRESSOR

RC2N — 8.6A — #10 AWG

1/2 HP REF. COMPR #2

COND FAN PSIG — 50W — CRANK CASE HTR — #R — RED

COND FAN — .8A — RUN — RED

BLK — WHT — START — YEL — #S

DISCHARGE RES — RED — BLU — STARTING CAPAC

1 — 2 — 5 — POTENTIAL RELAY

30A — FCC — #15 16A — #1 BLK — LP — HP — BLK — #L — PROTECTOR (3, 1) — #C — BLK — COMPRESSOR

FCN — 125A — #10 AWG

BUS GND IN LKR

1 HP UNIT FREEZER

COND FAN PSIG — 50W — CRANK CASE HTR — #R — RED

COND FAN — .8A — .8A — BLK — RUN — RED

BLK — WHT — START — YEL — #S

RUN CAPAC — RED — YEL

RED — BLU — STARTING CAPAC

1 — 2 — 5 — POTENTIAL RELAY

FREEZER

	HIGH	LOW	COND FAN
OPEN	180 PSIG	-10"	90 PSIG
CLOSE	140 PSIG	0	107 PSIG

TABLE PERTAINS TO 1 HP UNIT FREEZER

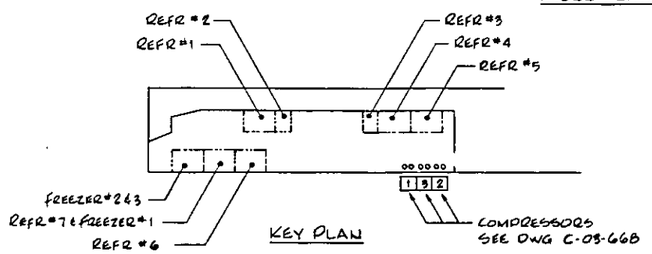

KEY PLAN

REFERENCE DRAWINGS:

D-00-806(8500-08)

QTY/CAR — USED ON

EQUIPMENT ENGINEERING

Amtrak

National Railroad Passenger Corporation

TITLE: REFRIGERATION EQUIPMENT SCHEMATIC COMPRESSOR/CONDENSERS

DRAWN 12/6/79 AWKARD — CHECKED — APPROVED — APPROVED

SCALE NONE — DRAWING NO D-01-794 — REV F

REMOVE ALL BURRS-BREAK SHARP CORNERS

REVISIONS				
LTR	ZONE	DESCRIPTION	DATE	APP'D
A		REFINED CURRENT VALUES. MB	7/3/80	7/3/80 RFBELL
B		CORRECTED PER CMP. DRAWING.	10/21/80 MRB	RF BRUCE
C		ADDED NEW CAR SERIES.	11/17/80 MRB	RF BRUCE 11/17/80
D		ADDED KEY PLAN	12/16/80 GA	RF BRUCE 12-16-80

#6 AWG

FOOD PRESERVATION

50A

FS2A1 — FS2A

FS2B1 — FS2B

FS2C1 — FS2C

TO TRANSFER CONTACTOR SEE DWG'S D-01-538 OR D-01-617

TO KITCHEN TRANSFORMER NEUTRAL

FSN

#2 AWG

BUS

BUS GND IN LKR

20A — RC1A — #14 — 10A — #1 BLK — LP — HP — BLK — #2 — PROTECTOR 3 1 — #C — BLK — COMPRESSOR

RC1N — 8.6A — #10 AWG

1/2 HP REF. COMPR #1

COOLER

	HIGH	LOW	COND FAN
OPEN	180 PSIG	-8"	90 PSIG
CLOSE	140 PSIG	0	107 PSIG

TABLE PERTAINS TO REF. COMPR #1 & #2

COND FAN PSIG — 50W — CRANK CASE HTR

COND FAN — 1.8A

BLK — WHT — START — YEL — #S

RUN — RED

#R

DISCHARGE RES

RED — BLU — STARTING CAPAC

1 — 2 — 5 — POTENTIAL RELAY

20A — RC2B — #14 — 10A — #1 BLK — LP — HP — BLK — #2 — PROTECTOR 3 1 — #C — BLK — COMPRESSOR

RC2N — 8.6A — #10 AWG

1/2 HP REF. COMPR #2

COND FAN PSIG — 50W — CRANK CASE HTR

COND FAN — 1.8A

BLK — WHT — START — YEL — #S

RUN — RED

#R

DISCHARGE RES

RED — BLU — STARTING CAPAC

1 — 2 — 5 — POTENTIAL RELAY

30A — FCB — #15 — 11.5A — #1 BLK — LP — HP — BLK — #2 — PROTECTOR 3 1 — #C — BLK — COMPRESSOR

FCC — 7.8A — #10 AWG

1½ HP UNIT FREEZER

FREEZER

	HIGH	LOW	COND FAN
OPEN	180 PSIG	-10"	90 PSIG
CLOSE	140 PSIG	0	107 PSIG

TABLE PERTAINS TO 1½ HP UNIT FREEZER

COND FAN PSIG — 50W — CRANK CASE HTR

COND FAN — .3A — .3A

BLK — BLK — WHT — START — YEL — #S

RUN — RED

#R

RUN CAPAC

RED — YEL — RED — BLU — STARTING CAPAC

1 — 2 — 5 — POTENTIAL RELAY

REFR #2 — REFR #1 — REFR #3 — REFR #4 — REFR #5

FREEZER 2&3

REFR #2 & FREEZER #1

REFR #6

1 3 2

COMPRESSORS SEE DWG C-09-668

KEY PLAN

8509-8528

QTY/CAR — USED ON

REFERENCE DRAWINGS:

EQUIPMENT ENGINEERING

Amtrak

National Railroad Passenger Corporation

TITLE: REFRIGERATION EQUIPMENT SCHEMATIC COMPRESSOR/CONDENSERS

DRAWN: BROWN 5/8/80 — CHECKED: RF BRUCE 6-3-80 — APPROVED — APPROVED

SCALE: NONE — DRAWING NO. D-01-1660 — REV D

DO NOT SCALE DRAWING — SH. 1 OF 1

REMOVE ALL BURRS-BREAK SHARP CORNERS

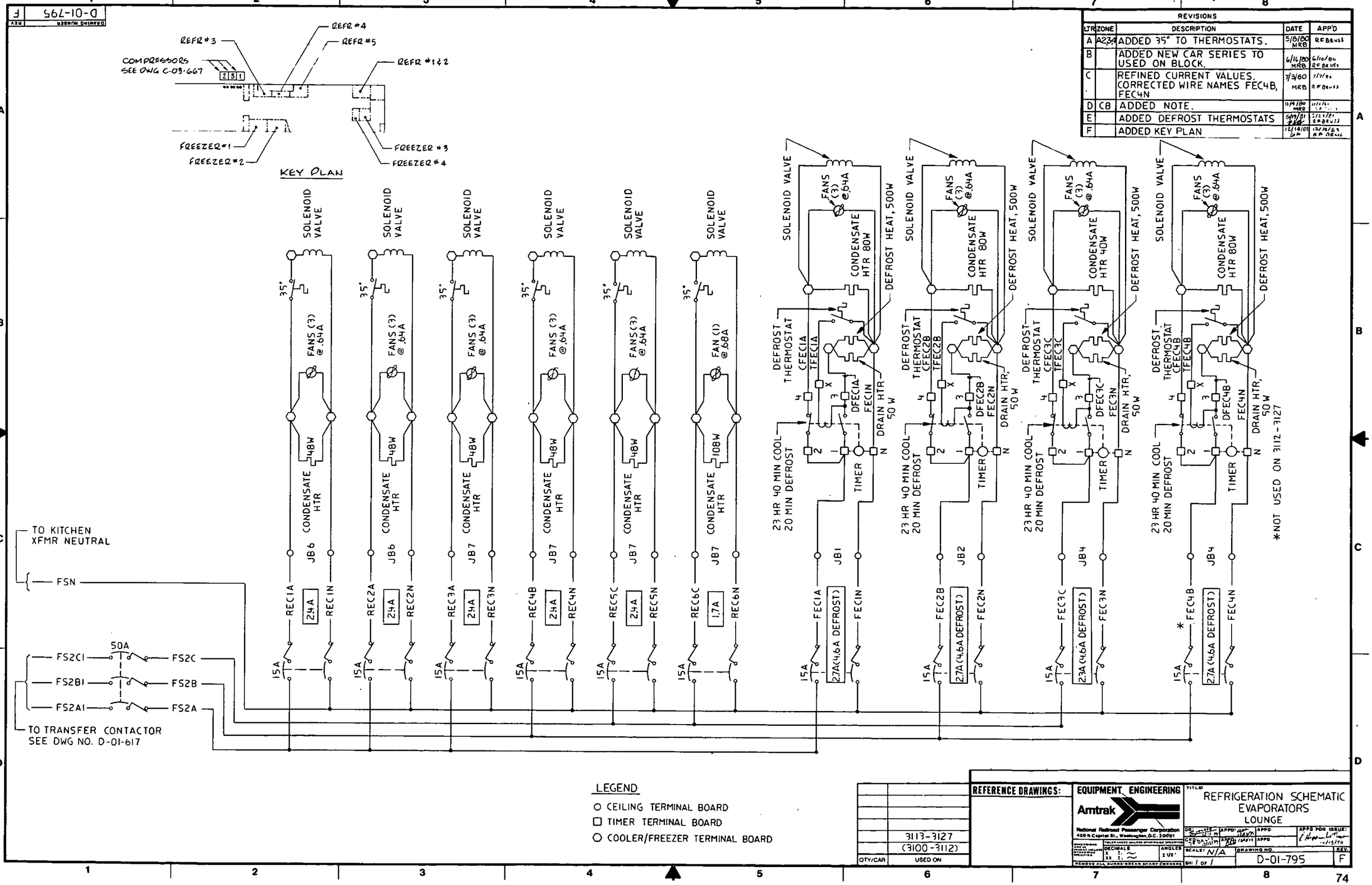

REVISIONS
LTR ZONE DESCRIPTION DATE APP'D
A A2,3,4 ADDED 35° TO THERMOSTATS. 5/8/80 MRB RFBRUSS
B ADDED NEW CAR SERIES TO USED ON BLOCK. 6/16/80 MRB 6/16/80 RFBRUSS
C REFINED CURRENT VALUES. CORRECTED WIRE NAMES FEC4B, FEC4N 7/3/80 MRB 7/7/80 RFBRUSS
D C8 ADDED NOTE. 11/4/80 MRB
E ADDED DEFROST THERMOSTATS 5/19/81 RFBRUSS
F ADDED KEY PLAN 12/14/83 RFBRUSS
D-01-795 F
REFR #3
REFR #4
REFR #5
REFR #1 & 2
COMPRESSORS SEE DWG C-03-667
FREEZER #1
FREEZER #2
FREEZER #3
FREEZER #4
KEY PLAN
SOLENOID VALVE
FANS (3) @ .64A
FAN (1) @ .68A
CONDENSATE HTR 80W
CONDENSATE HTR 40W
DEFROST HEAT, 500W
DEFROST THERMOSTAT
DRAIN HTR, 50 W
23 HR 40 MIN COOL 20 MIN DEFROST
TIMER
JB6
JB7
JB1
JB2
JB4
REC1A
REC1N
REC2A
REC2N
REC3A
REC3N
REC4B
REC4N
REC5C
REC5N
REC6C
REC6N
FEC1A
FEC1N
FEC2B
FEC2N
FEC3C
FEC3N
FEC4B
FEC4N
2.4A
1.7A
2.7A (4.6A DEFROST)
2.3A (4.6A DEFROST)
15A
35°
48W
108W
*NOT USED ON 3112-3127
TO KITCHEN XFMR NEUTRAL
FSN
50A
FS2C1
FS2B1
FS2A1
FS2C
FS2B
FS2A
TO TRANSFER CONTACTOR SEE DWG NO. D-01-617
LEGEND
CEILING TERMINAL BOARD
TIMER TERMINAL BOARD
COOLER/FREEZER TERMINAL BOARD
3113-3127
(3100-3112)
QTY/CAR
USED ON
REFERENCE DRAWINGS:
EQUIPMENT ENGINEERING
Amtrak
National Railroad Passenger Corporation
400 N Capitol St., Washington, D.C. 20001
TITLE: REFRIGERATION SCHEMATIC EVAPORATORS LOUNGE
SCALE: N/A
SH: 1 OF 1
DRAWING NO. D-01-795
REV. F

REVISIONS				
LTR	ZONE	DESCRIPTION	DATE	APP'D
A		ADDED NEW CAR SERIES TO USED ON BLOCK.	6/14/80 MRB	6/16/80 RF BRUSS
B		REFINED CURRENT VALUES. MRB	7/3/80	7/3/80 AFBRUSS
C		CORRECTED PER C.M.P. DRAWING	10/21/80 MRB	RFB
D		ADDED KEY PLAN	12/14/83 GA	12-14-83 A.F. BRUSS

#6 AWG

FOOD PRESERVATION

FS2A1 — 50A — FS2A

FS2B1 — FS2B

FS2C1 — FS2C

TO TRANSFER CONTACTOR SEE DWG'S D-01-538 OR D-01-617

TO KITCHEN TRANSFORMER NEUTRAL — FSN — #2 AWG

BUS

BUS GND IN LKR

1/2 HP REF. COMPR #1

20A — RC1A — #14 — 10A — #1 BLK — LP — HP — BLK — #2 — PROTECTOR (3, 1) — #C — BLK

RC1N — 8.6A — #10 AWG

COMPRESSOR

BLK — WHT. — START — YEL — #S

COND FAN PSIG — 50W — #R

COND FAN — 1.8A — RUN — RED

CRANK CASE HTR

RED — DISCHARGE RES — STARTING CAPAC — BLU

POTENTIAL RELAY

COOLER

	HIGH	LOW	COND FAN
OPEN	180 PSIG	-8"	90 PSIG
CLOSE	140 PSIG	0	107 PSIG

TABLE PERTAINS TO REF. COMPR #1 & #2

1/2 HP REF. COMPR #2

20A — RC2B — #14 — 10A — #1 BLK — LP — HP — BLK — #2 — PROTECTOR (3, 1) — #C — BLK

RC2N — 8.6A — #10 AWG

COMPRESSOR

BLK — WHT — START — YEL — #S

COND FAN PSIG — 50W — #R

COND FAN — 1.8A — RUN — RED

CRANK CASE HTR

RED — DISCHARGE RES — STARTING CAPAC — BLU

POTENTIAL RELAY

1½ HP UNIT FREEZER

30A — FCA — #15 — 11.5A — #1 BLK — LP — HP — BLK — #2 — PROTECTOR (3, 1) — #C — BLK

FCC — 8.4A — #10 AWG

COMPRESSOR

BLK — WHT — START — YEL — #S

COND FAN PSIG — 50W — #R

COND FAN — .3A — .3A — RUN — RED

CRANK CASE HTR

RED — RUN CAPAC — YEL — STARTING CAPAC — BLU

POTENTIAL RELAY

FREEZER

	HIGH	LOW	COND FAN
OPEN	180 PSIG	-10"	90 PSIG
CLOSE	140 PSIG	0	107 PSIG

TABLE PERTAINS TO 1½ HP UNIT FREEZER

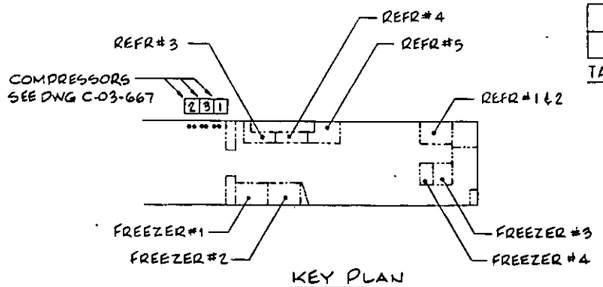

KEY PLAN

REFERENCE DRAWINGS:

3113-3127

D-00-804(3100-12)

QTY/CAR — USED ON

EQUIPMENT ENGINEERING

Amtrak

National Railroad Passenger Corporation

TITLE: REFRIGERATION EQUIPMENT SCHEMATIC COMPRESSOR/CONDENSERS

DRAWN BROWN 5/8/80 — CHECKED — APPROVED — APPROVED

SCALE NONE — DRAWING NO D-01-796 — REV D

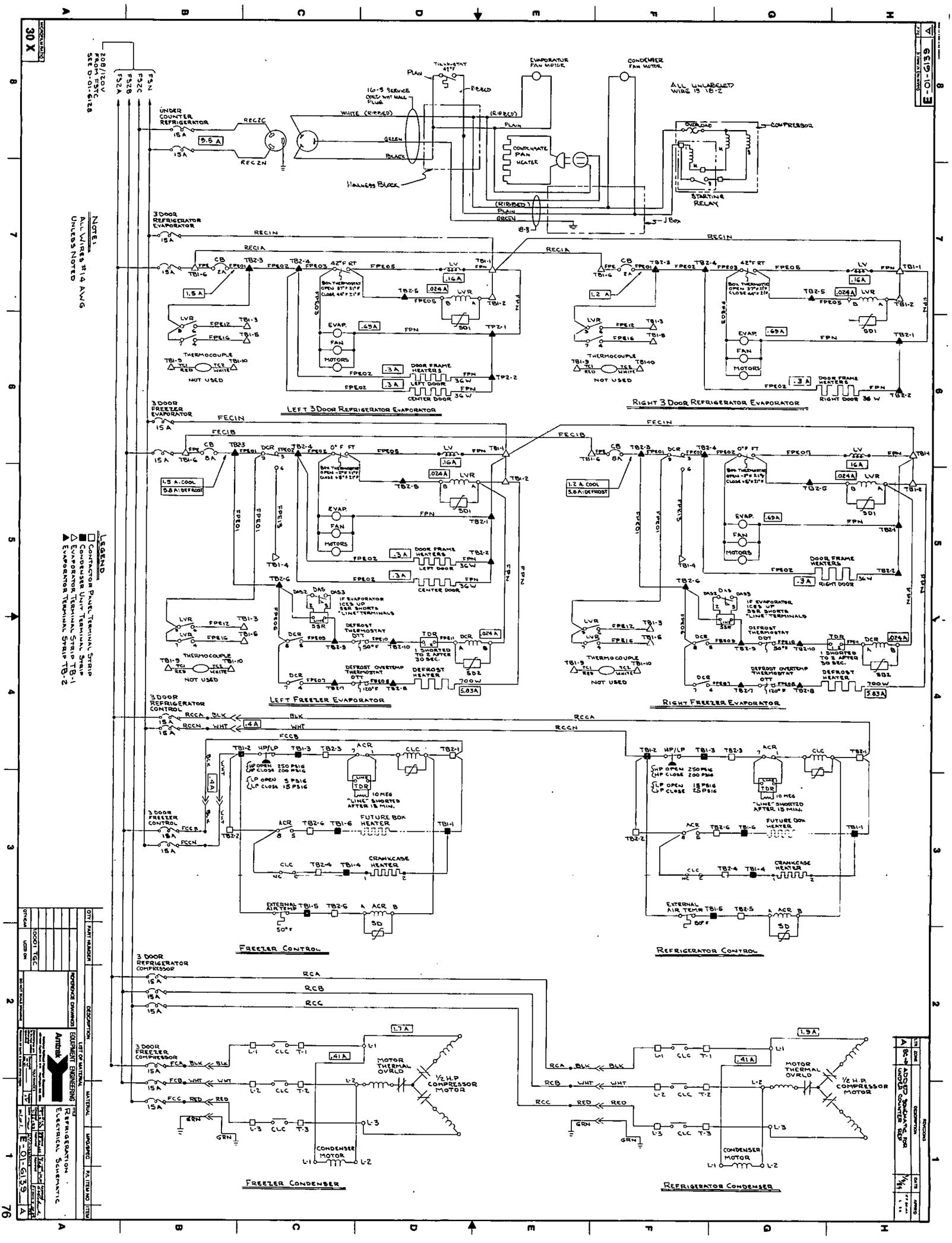

30 X
E-01-6139 A
NOTE: ALL WIRES #14 AWG UNLESS NOTED
LEGEND
CONTACTOR PANEL TERMINAL STRIP
CONDENSER UNIT TERMINAL STRIP
EVAPORATOR TERMINAL STRIP TB-1
EVAPORATOR TERMINAL STRIP TB-2
ALL UNLABELED WIRE IS 18-2
UNDER COUNTER REFRIGERATOR
EVAPORATOR FAN MOTOR
CONDENSER FAN MOTOR
CONDENSATE PAN HEATER
STARTING RELAY
COMPRESSOR
HARNESS BLOCK
3 DOOR REFRIGERATOR EVAPORATOR
3 DOOR FREEZER EVAPORATOR
LEFT 3 DOOR REFRIGERATOR EVAPORATOR
RIGHT 3 DOOR REFRIGERATOR EVAPORATOR
LEFT FREEZER EVAPORATOR
RIGHT FREEZER EVAPORATOR
3 DOOR REFRIGERATOR CONTROL
3 DOOR FREEZER CONTROL
FREEZER CONTROL
REFRIGERATOR CONTROL
3 DOOR REFRIGERATOR COMPRESSOR
3 DOOR FREEZER COMPRESSOR
FREEZER CONDENSER
REFRIGERATOR CONDENSER
MOTOR THERMAL OVRLD
1/2 H.P. COMPRESSOR MOTOR
CONDENSER MOTOR
EQUIPMENT ENGINEERING
Amtrak
REFRIGERATION ELECTRICAL SCHEMATIC
E-01-6139 A

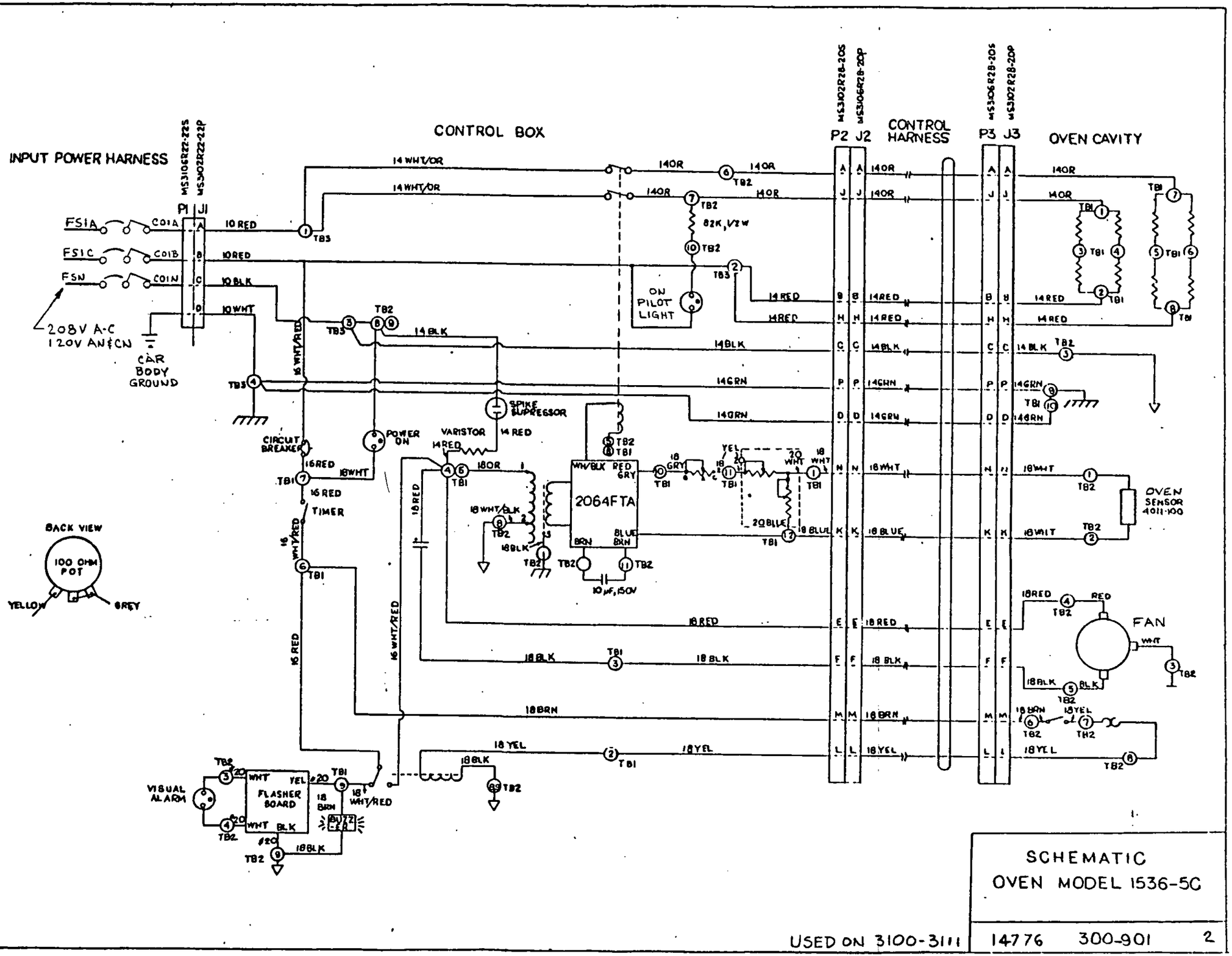

SCHEMATIC
OVEN MODEL 1536-5C

USED ON 3100-3111

14776 300-901 2

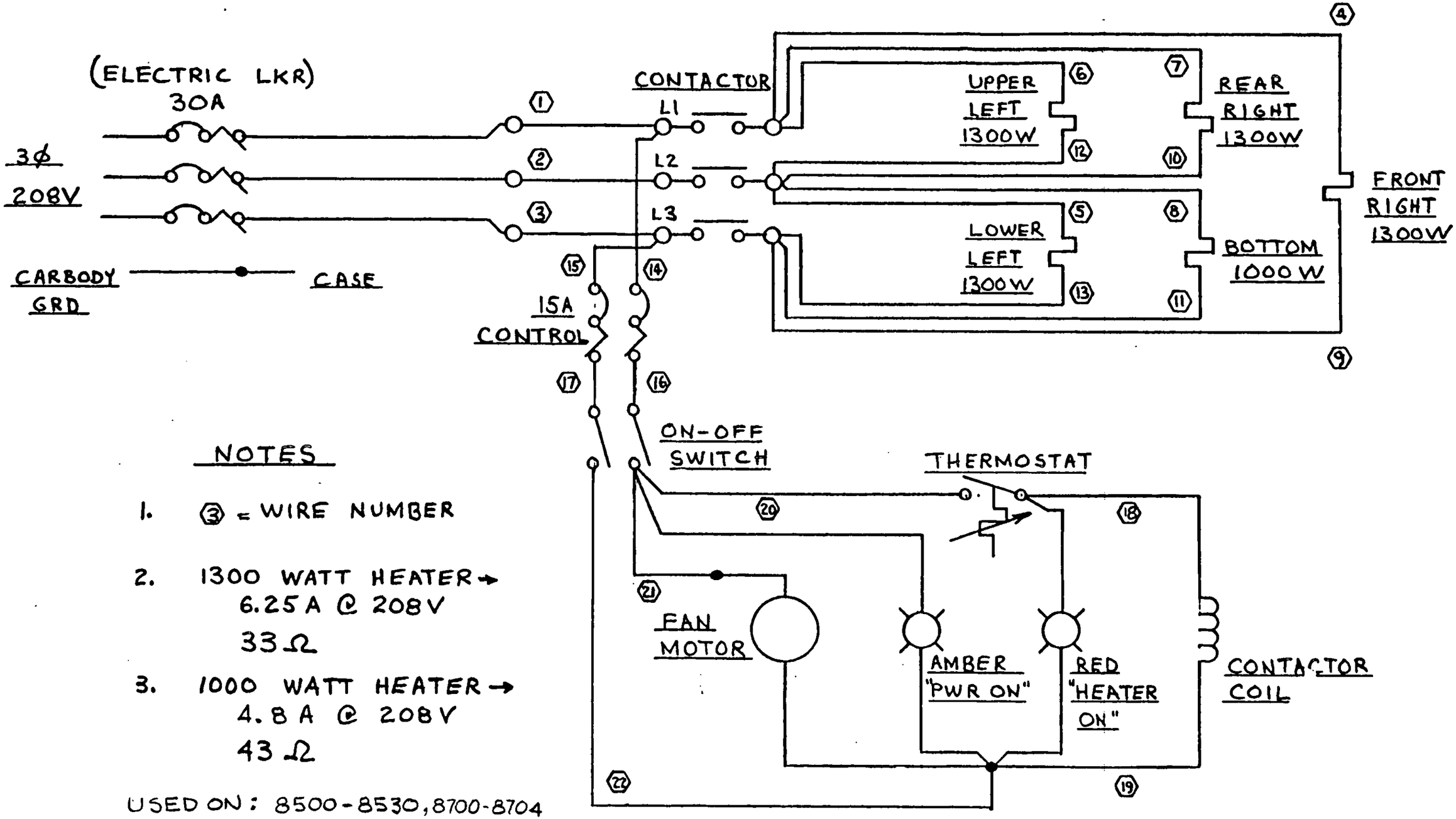

NOTES

1. ③ = WIRE NUMBER
2. 1300 WATT HEATER → 6.25 A @ 208V 33 Ω
3. 1000 WATT HEATER → 4.8 A @ 208V 43 Ω

USED ON: 8500-8530, 8700-8704
3112 - 3127

ELECTRICAL SCHEMATIC - MARKET FORGE - 2200Q

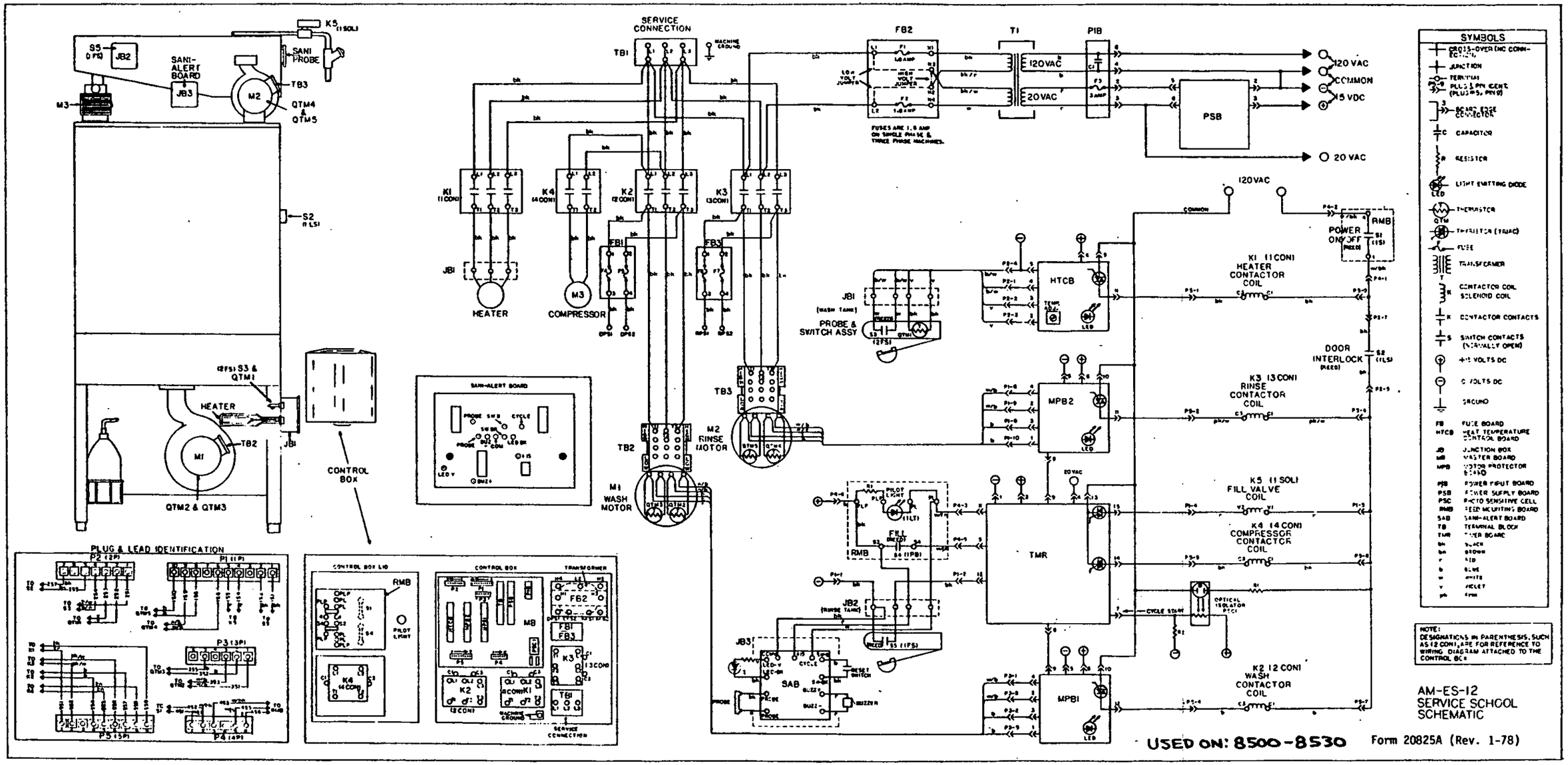
SERVICE CONNECTION
TB1
FB2
T1
PIB
120VAC
20VAC
PSB
120 VAC
COMMON
5 VDC
20 VAC
K1 (1 CON)
K4 (4 CON)
K2 (2 CON)
K3 (3 CON)
FB1
FB3
JB1
HEATER
M3
COMPRESSOR
TB3
M2 RINSE MOTOR
TB2
M1 WASH MOTOR
PROBE & SWITCH ASSY
HTCB
MPB2
MPB1
TMR
RMB
POWER ON/OFF
K1 (1 CON) HEATER CONTACTOR COIL
K3 (3 CON) RINSE CONTACTOR COIL
K5 (1 SOL) FILL VALVE COIL
K4 (4 CON) COMPRESSOR CONTACTOR COIL
K2 (2 CON) WASH CONTACTOR COIL
DOOR INTERLOCK
SAB
JB3
S5
JB2
SANI-ALERT BOARD
SANI PROBE
QTM4 & QTM5
S2
(2FS) S3 & QTM1
HEATER
TB2
M1
QTM2 & QTM3
CONTROL BOX
PLUG & LEAD IDENTIFICATION
P2 (2P)
P1 (11P)
P3 (3P)
P5 (5P)
P6 (6P)
CONTROL BOX LID
CONTROL BOX
TRANSFORMER
MB
SYMBOLS
JUNCTION
CAPACITOR
RESISTOR
LIGHT EMITTING DIODE
THERMISTOR
THYRISTOR (TRIAC)
FUSE
TRANSFORMER
CONTACTOR COIL SOLENOID COIL
CONTACTOR CONTACTS
SWITCH CONTACTS (NORMALLY OPEN)
+12 VOLTS DC
0 VOLTS DC
GROUND
FUSE BOARD
HEAT TEMPERATURE CONTROL BOARD
JUNCTION BOX
MASTER BOARD
MOTOR PROTECTOR (INTERNAL)
POWER INPUT BOARD
POWER SUPPLY BOARD
PHOTO SENSITIVE CELL
FEED MOUNTING BOARD
SANI-ALERT BOARD
TERMINAL BLOCK
TIMER BOARD
BLACK
BROWN
RED
BLUE
WHITE
VIOLET
PINK
NOTE: DESIGNATIONS IN PARENTHESIS, SUCH AS (2 CON), ARE FOR REFERENCE TO WIRING DIAGRAM ATTACHED TO THE CONTROL BOX.
AM-ES-12 SERVICE SCHOOL SCHEMATIC
USED ON: 8500-8530
Form 20825A (Rev. 1-78)

8L9-10-D

BASIC WATER COOLER (BUILT-UP)

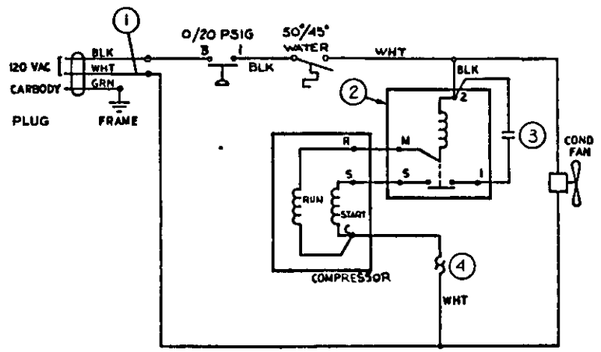

COMP	CURRENT	RELAY	CAPACITOR	OVERLOAD	RESISTANCE S-C	RESISTANCE R-S
	①	②	③	④		
AE3414A	2.9	P82654	NONE-JUMPER PIN 1 TO 2	P83601	10-17	14-21
AE4430A	5.0	P82928	243-292 MFD @ 110 VAC	P83940	3-7	5-8
AJ4461A	9.1	P82481-1	235-282 MFD @ 165 VAC	P83991-1	3-6	3-7

USED ON ALL CARS EXCEPT SLEEPERS &4600 COACHES

BASIC WATER COOLER WITH CIRCULATION PUMP (BUILT-UP)

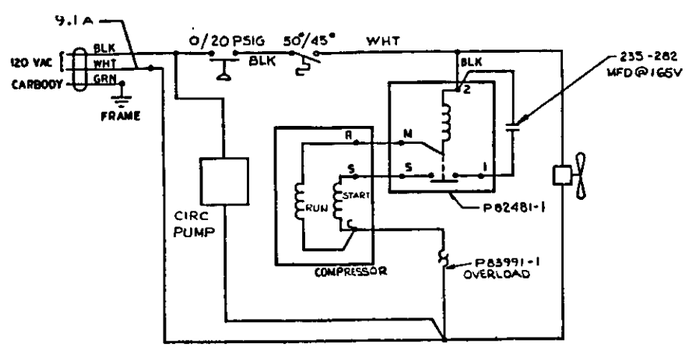

AJ 4461A [S-C 3-6Ω, R-S 3-7Ω] WARM

USED ON 10-6 SLEEPERS

BASIC WATER COOLER WITH BOTTLE COOLER (BUILT-UP)

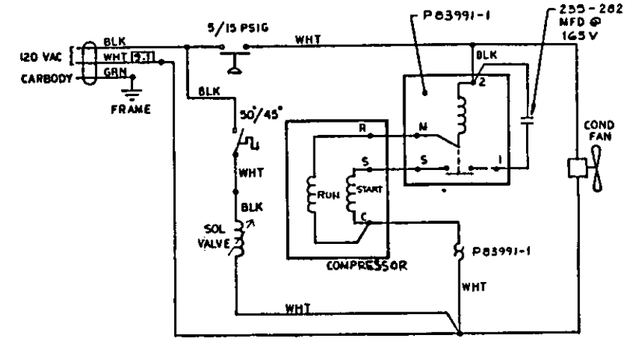

AJ 4461 [S-C 3-6Ω, R-S 3-7Ω] WARM

USED ON 4600 COACHES

SUNROC RPR-3/PS WATER COOLER

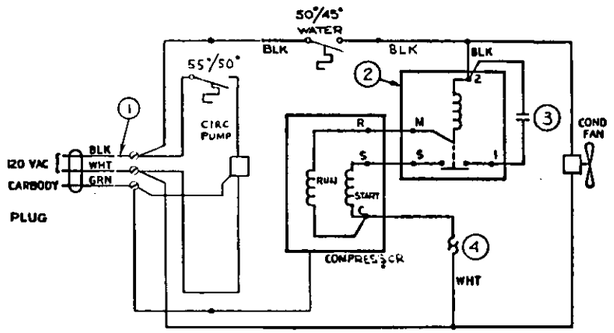

COMP	CURRENT	RELAY	CAPACITOR	OVERLOAD	RESISTANCE S-C	RESISTANCE R-S
	①	②	③	④		
AE4430A	5.0	P82928	243-292 MFD @ 110 VAC	P83940	3-7	5-8

USED ON 10-6 & 11DB SLEEPERS

REPLACEMENT

SUNROC TT5A WATER COOLER

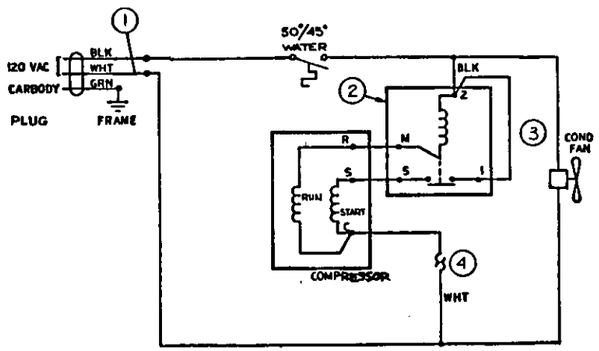

COMP	CURRENT	RELAY	CAPACITOR	OVERLOAD	RESISTANCE S-C	RESISTANCE R-S
	①	②	③	④		
AE3414A	2.9	P82654	NONE-JUMPER PIN 1 TO 2	P83601	10-17	14-21

USED ON NON-SLEEPERS

REPLACEMENT

QTY	PART NUMBER	DESCRIPTION	MATERIAL	MFG SPEC	PATTERN NO	ITEM

LIST OF MATERIAL

REFERENCE DRAWINGS

1610-9411

QTY CAR | USED ON

EQUIPMENT ENGINEERING

Amtrak

National Railroad Passenger Corporation

TITLE: WATER COOLER SCHEMATICS

C. DANIEL

TOLERANCES

D-01-679

24 X

REVISIONS				
LTR	ZONE	DESCRIPTION	DATE	APP'D
A		REDESIGNED & REDRAWN.	11/29/79	RF Bruss 12/12/79
B		UPDATED CAR NO., CHANGED THERMO TO 2 POLE. MEB	10/13/80	RF Bruss 10/16/80
C		5000 SERIES WIRING WAS B-END, RIGHT FOR IHWA, IHWB. MEB	11/13/80	RF Bruss 11/12/80

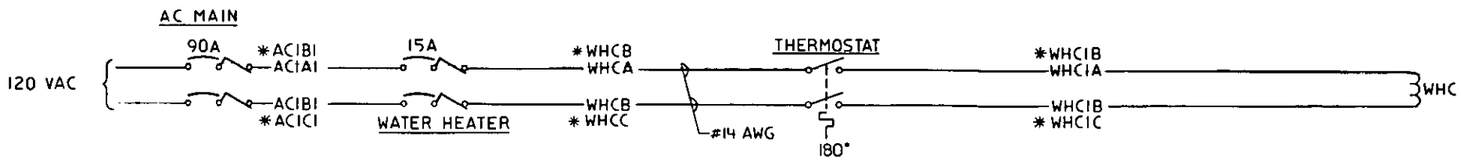

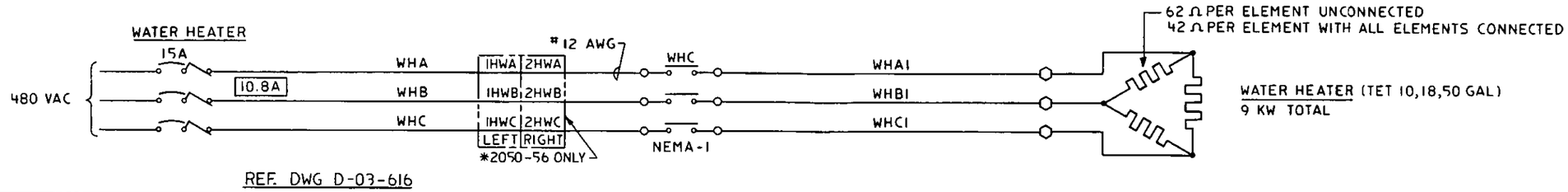

REF. DWG D-03-616

HEATER SIZE IN GAL.	QTY REQD	CAR NO.
18	1	1614-17
18	1	1622-25
10	2	2050-56 *
18	1	2080-95
18	1	2430-82
18	1	2871-79
18	1	2895-96
50	1	8500-26

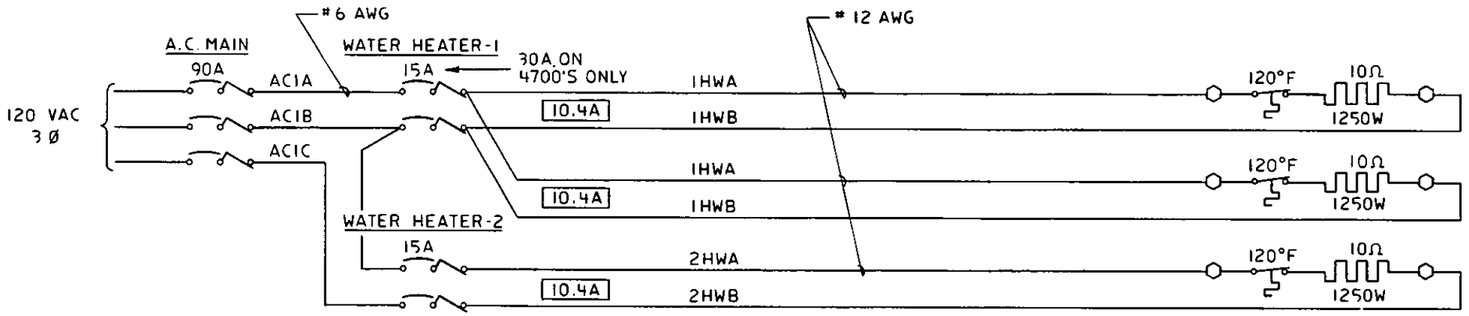

TET-1 GAL. HEATERS		WIRING LOCATIONS IN CAR	
CAR NO.	QTY REQD	1HWA, 1HWB	2HWB, 2HWC
1622-25	2	B-END, RIGHT	B-END, LEFT
3100-27	1	FOOD SERVICE	——
4000-26	2	B-END, LEFT	A-END, LEFT
4600-50	2	B-END, RIGHT	A-END, LEFT
4700-39	3	A-END, L & R	B-END, RIGHT
4740-42	2	B-END, RIGHT	A-END, LEFT
5000-08	2	B-END, LEFT	A-END, LEFT
7000-07	2	B-END, LEFT	A-END, RIGHT
7600-18	2	B-END, RIGHT	B-END, LEFT

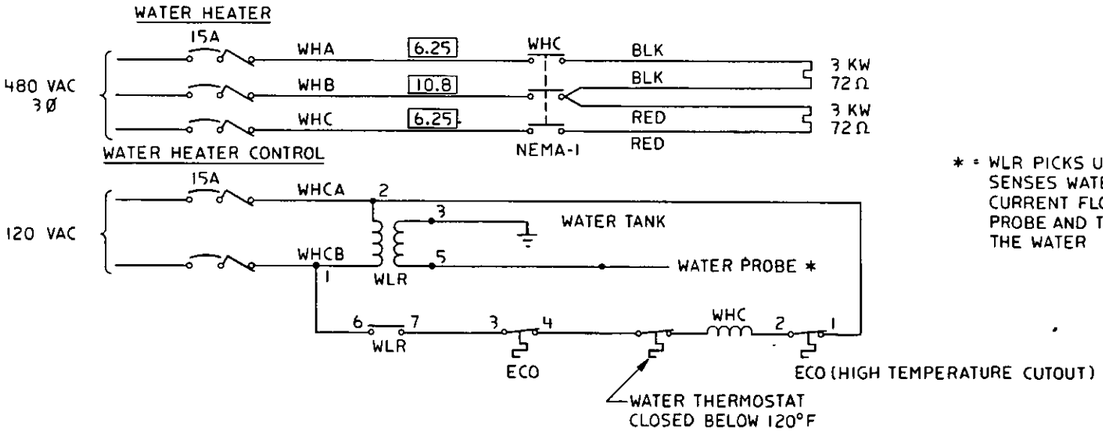

* = WLR PICKS UP WHEN PROBE SENSES WATER IN TANK AND CURRENT FLOWS BETWEEN PROBE AND TANK THROUGH THE WATER

HATCO USED ON
1610-13, 2880-94

QTY/CAR	USED ON	QTY/CAR	USED ON
			4000-26
			3100-27
	8500-26		2871-96
	7600-18		2430-82
	7000-07		2080-97
	5000-08		2050-56
	4700-42		1622-25
	4600-50		1610-17

REFERENCE DRAWINGS:

EQUIPMENT ENGINEERING
Amtrak
National Railroad Passenger Corporation

TITLE: WIRING DIAGRAM WATER HEATER

DRAWN: 4/10/79 AWKARD | CHECKED: RF Bruss 4-10-79 | APPROVED | APPROVED

SCALE: NONE | DRAWING NO. D-04-752 C | SH. 1 OF 1

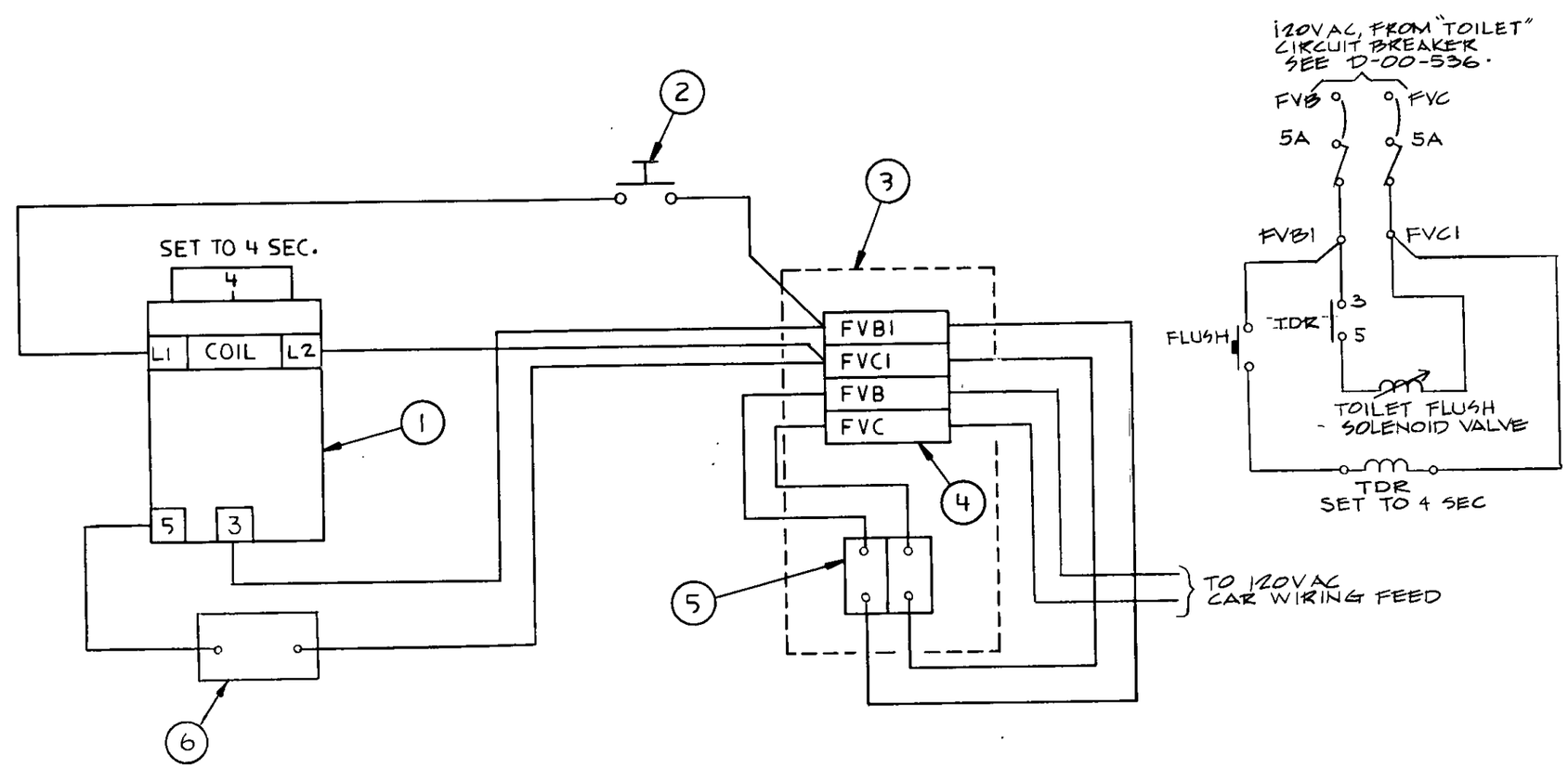

AMMS NO.	QTY	PART NUMBER	DESCRIPTION	MATERIAL	MFG/SPEC	P/L ITEM NO	ITEM
2492504115	1		VALVE, FLUSH, SOLENOID	17790686	VAPOR		6
2404508811	2		CIRCUIT BREAKER, 5A	772725	KLIXON		5
2542105703	4		TERMINAL BLOCK,	1492 SERIES	ALLEN-BRADLEY		4
———	1		BRACKET, MOUNTING	BG SHOPS			3
2492523869	1		PUSHBUTTON SWITCH				2
253000880X	1		TIME DELAY RELAY, 5-50 SEC. DELAY ON DROPOUT	7022 AD	AGASTAT		1

LIST OF MATERIAL

QTY/CAR	USED ON
	2050-2896

REFERENCE DRAWINGS

DO NOT SCALE DRAWING

EQUIPMENT ENGINEERING

Amtrak

National Railroad Passenger Corporation
400 North Capitol Street, N.W. Washington, D.C. 20001

Dimensions are in inches unless otherwise specified.

TOLERANCES: Decimals xx +/- xxx +/- ; Angles ± ½°

Remove all burrs & break sharp edges.

TITLE: TOILET FLUSH VALVE WIRING

Drawn DWB 12-19-83 | Approved | Approved RE BRUSS | Approved

Checked | Approved | Approved | For Issue 3-30-84

Scale ~ | SH 1 OF 1 | DRAWING NUMBER C-04-669 | REV.

REVISIONS

LTR	ZONE	DESCRIPTION	DATE	APPR'D

DRAWING NUMBER C-04-7102 REV.

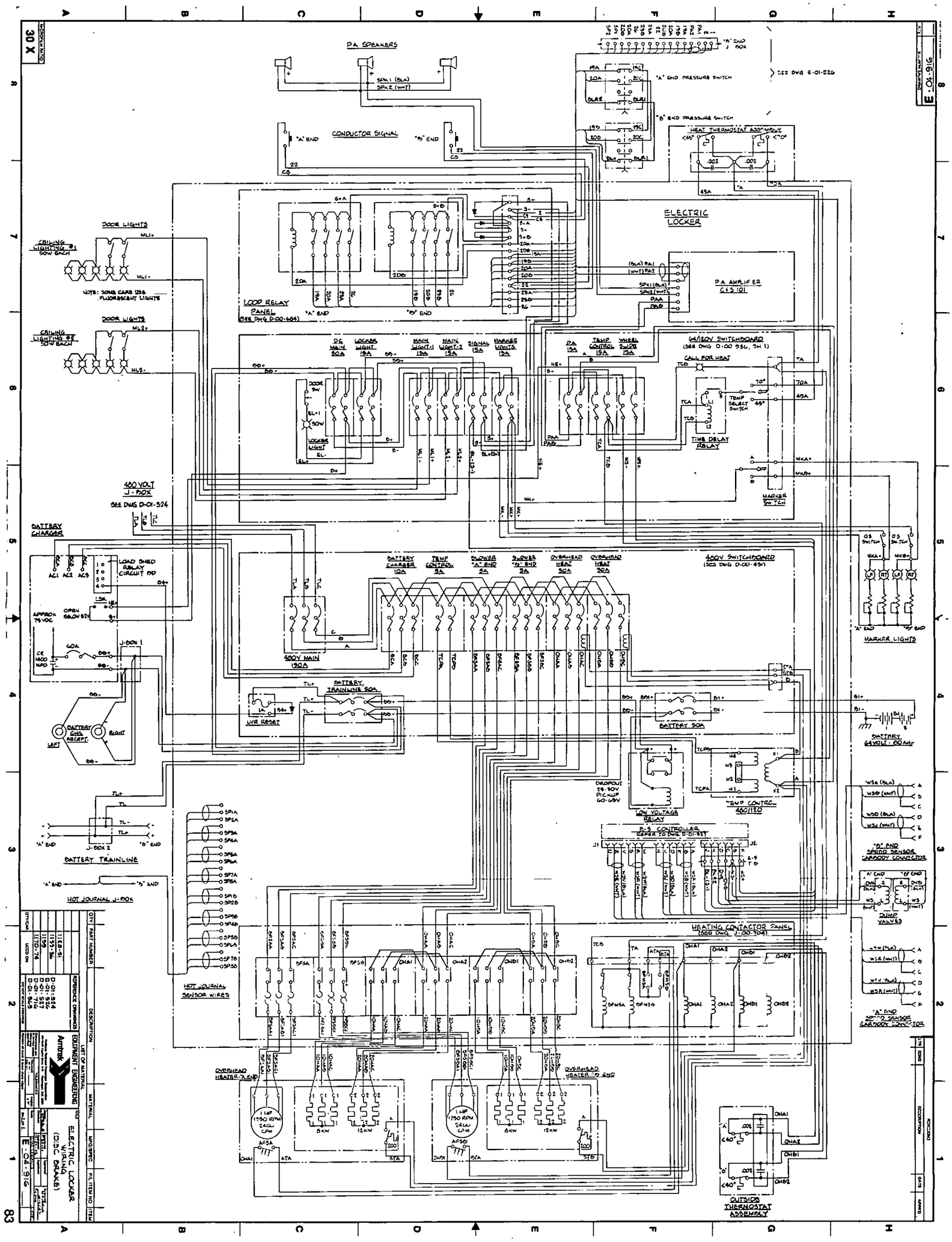

30 X
E-04-916
PA SPEAKERS
CONDUCTOR SIGNAL
"A" END
"B" END
"A" END PRESSURE SWITCH
"B" END PRESSURE SWITCH
SEE DWG E-01-526
HEAT THERMOSTAT ASSEMBLY
ELECTRIC LOCKER
DOOR LIGHTS
CEILING LIGHTING #1 50W EACH
NOTE: SOME CARS USE FLUORESCENT LIGHTS
CEILING LIGHTING #2 50W EACH
LOOP RELAY PANEL (SEE DWG D-00-684)
PA AMPLIFIER C+S 101
DC MAIN 50A
LOCKER LIGHT 15A
MAIN LIGHT-1 15A
MAIN LIGHT-2 15A
SIGNAL 15A
MARKER LIGHTS 15A
PA 15A
TEMP CONTROL 15A
WHEEL DWIDE 15A
64/120V SWITCHBOARD (SEE DWG D-00-536, SH 1)
CALL FOR HEAT
TEMP SELECT SWITCH
TIME DELAY RELAY
MARKER SWITCH
480 VOLT J-BOX
SEE DWG D-01-524
BATTERY CHARGER
LOAD SHED RELAY CIRCUIT BD
APPROX 75VDC
OPEN BELOW 52V
J-BOX 1
BATTERY CHG RECEPT.
LEFT
RIGHT
BATTERY CHARGER 10A
TEMP CONTROL 5A
BLOWER "A" END 5A
BLOWER "B" END 5A
OVERHEAD HEAT 30A
OVERHEAD HEAT 30A
480V SWITCHBOARD (SEE DWG D-00-434)
480V MAIN 150A
BATTERY TRAINLINE 50A
LVR RESET
BATTERY 50A
BATTERY 64VOLT - 80AHr
MARKER LIGHTS
DROPOUT 25-30V PICKUP 60-65V
LOW VOLTAGE RELAY
TEMP CONTROL 480/120
B-S CONTROLLER
"B" END SPEED SENSOR CARBODY CONNECTOR
DUMP VALVES
"A" END SPEED SENSOR CARBODY CONNECTOR
BATTERY TRAINLINE
HOT JOURNAL J-BOX
HOT JOURNAL SENSOR WIRES
HEATING CONTACTOR PANEL (SEE DWG D-00-704)
OVERHEAD HEATER "A" END
OVERHEAD HEATER "B" END
1 HP 1750 RPM 240V CPM
8KW
12KW
OUTSIDE THERMOSTAT ASSEMBLY
QTY
PART NUMBER
DESCRIPTION
MATERIAL
MFG/SPEC
P/L ITEM NO
ITEM
LIST OF MATERIAL
REFERENCE DRAWINGS
EQUIPMENT ENGINEERING
Amtrak
ELECTRIC LOCKER WIRING (DISC BRAKE)
E-04-916

REVISIONS				
LTR	ZONE	DESCRIPTION	DATE	APP'D
A		ADDED NEW CAR SERIES	[illegible]	[illegible]
B		ADDED NEW CAR SERIES.	[illegible]	[illegible]
C		ADDED NEW CAR SERIES	[illegible]	R F BRUSH

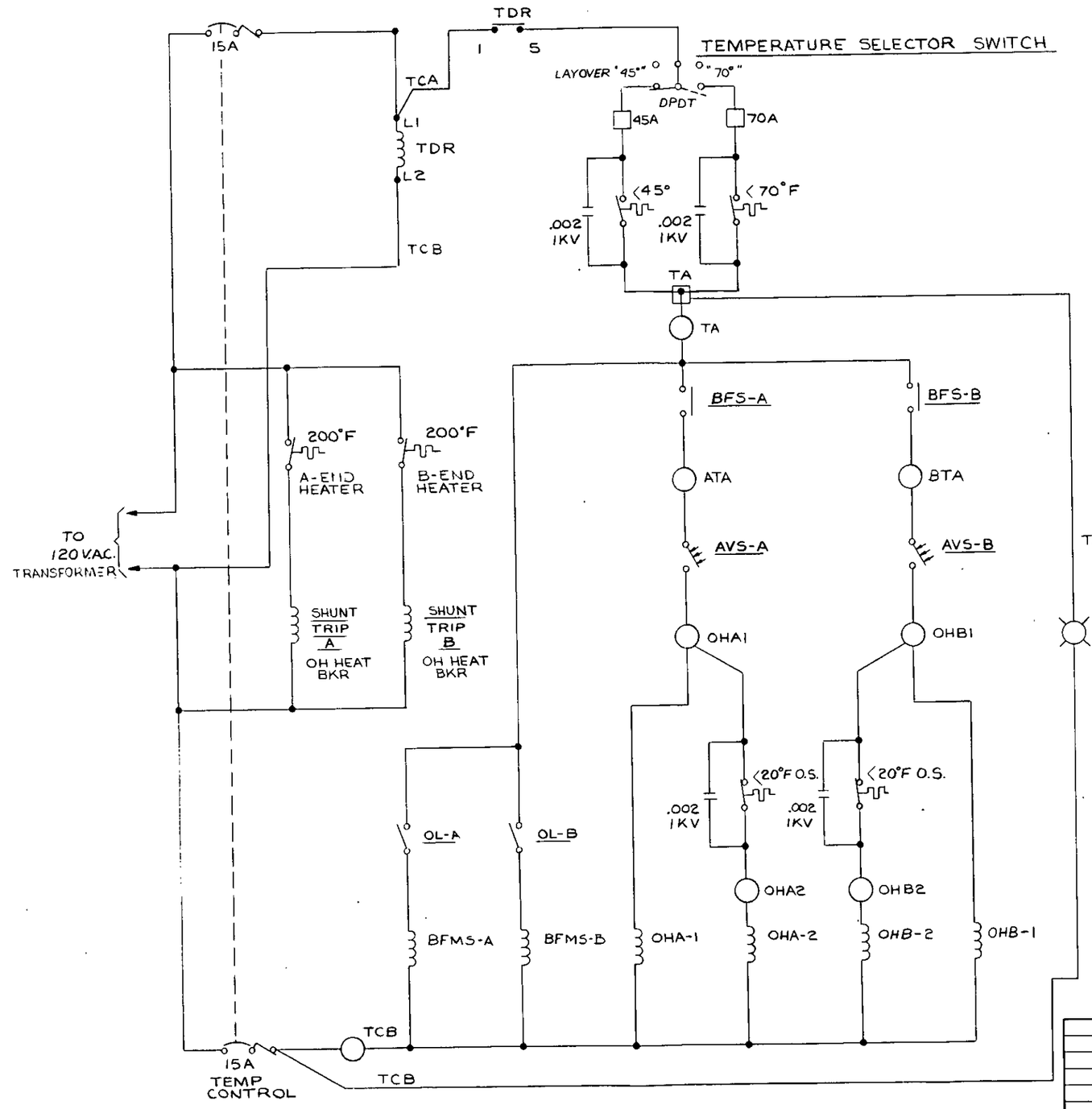

LEGEND

- ○ HEATER CONTACTOR PANEL
- □ LOW VOLTAGE BREAKER PANEL TERMINAL

QTY/CAR	USED ON
	1203-72
	1126-92

REFERENCE DRAWINGS:
D-00-800

EQUIPMENT ENGINEERING
Amtrak
National Railroad Passenger Corporation

TITLE: TEMPERATURE CONTROL SCHEMATIC

DRAWN: SOESBEE 1-19-79 | CHECKED | APPROVED | APPROVED

SCALE: NONE | DRAWING NO: D-01-565 | REV: C

DO NOT SCALE DRAWING | SH 1 OF 1

REMOVE ALL BURRS-BREAK SHARP CORNERS

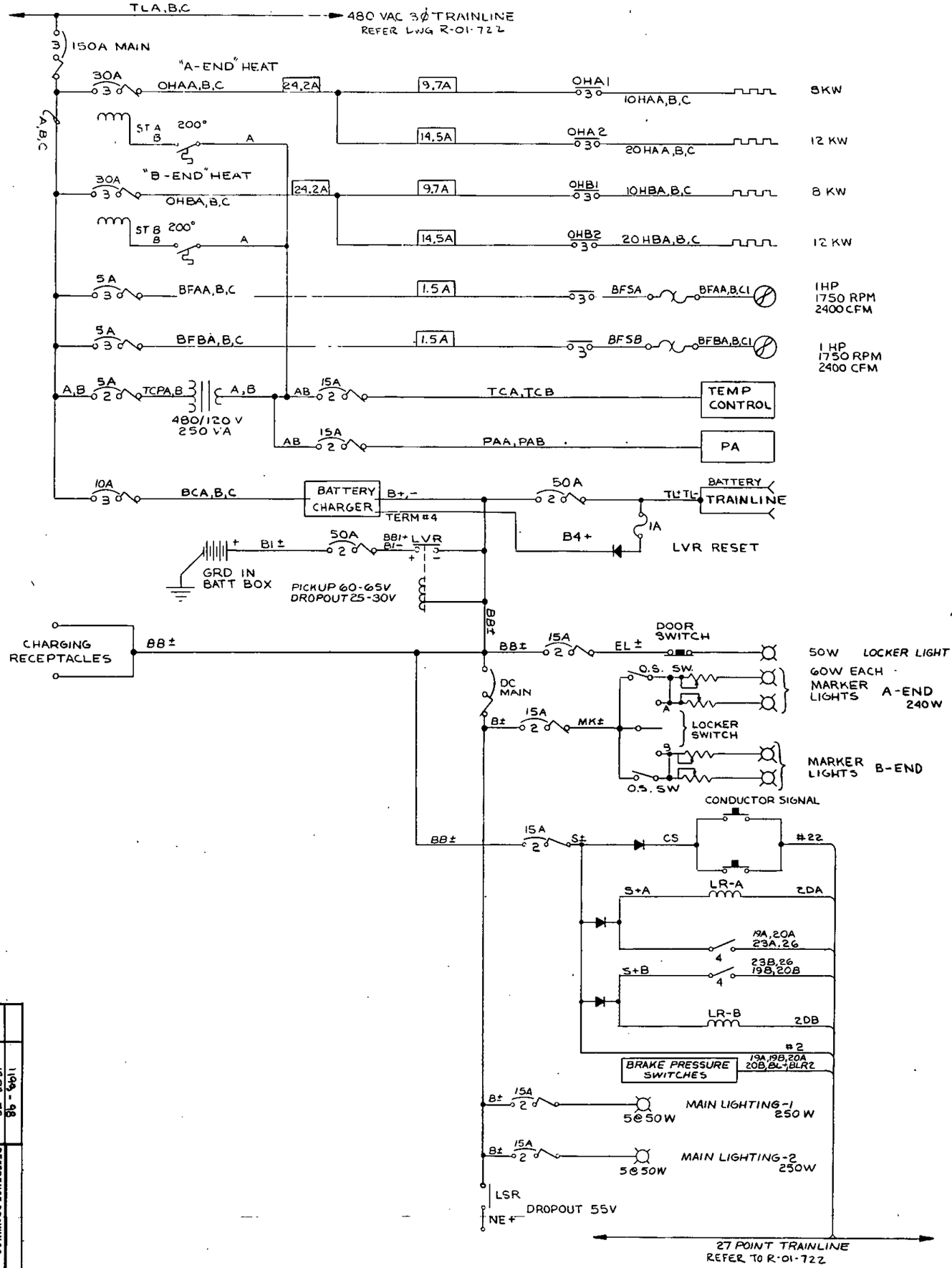

QTY/CAR	REFERENCE DRAWINGS:
	1199 - 98
	1209-72
	1175-92
	1140-69
	1137-38
	1132
	1126-27
	USED ON

EQUIPMENT ENGINEERING

Amtrak

National Railroad Passenger Corporation
955 L'Enfant Plaza North, S.W., Washington, D.C. 20024

TITLE
SINGLE LINE
POWER SCHEMATIC
BAGGAGE CARS

DRAWN	CHECKED	APPROVED
7-22-75		

DRAWING NO. D-101-716

REV E

LTR	ZONE	REVISIONS DESCRIPTION	DATE	APPD
A		RECORD CHANGE	1/1/75	RP DAVIS
B		ADDED NEW CAR SERIES.	10/15/76	RP DAVIS
C		ADDED DECELOSTAT & NEW CAR SERIES	10/24/76	RP DAVIS
D		DELETED DECELOSTAT (SHOWN ON DWG D-01-1710) CNGD CAR NO.	11-27-83	RP DAVIS
		ADDED NEW CAR SERIES	3/28/84	RP DAVIS

85

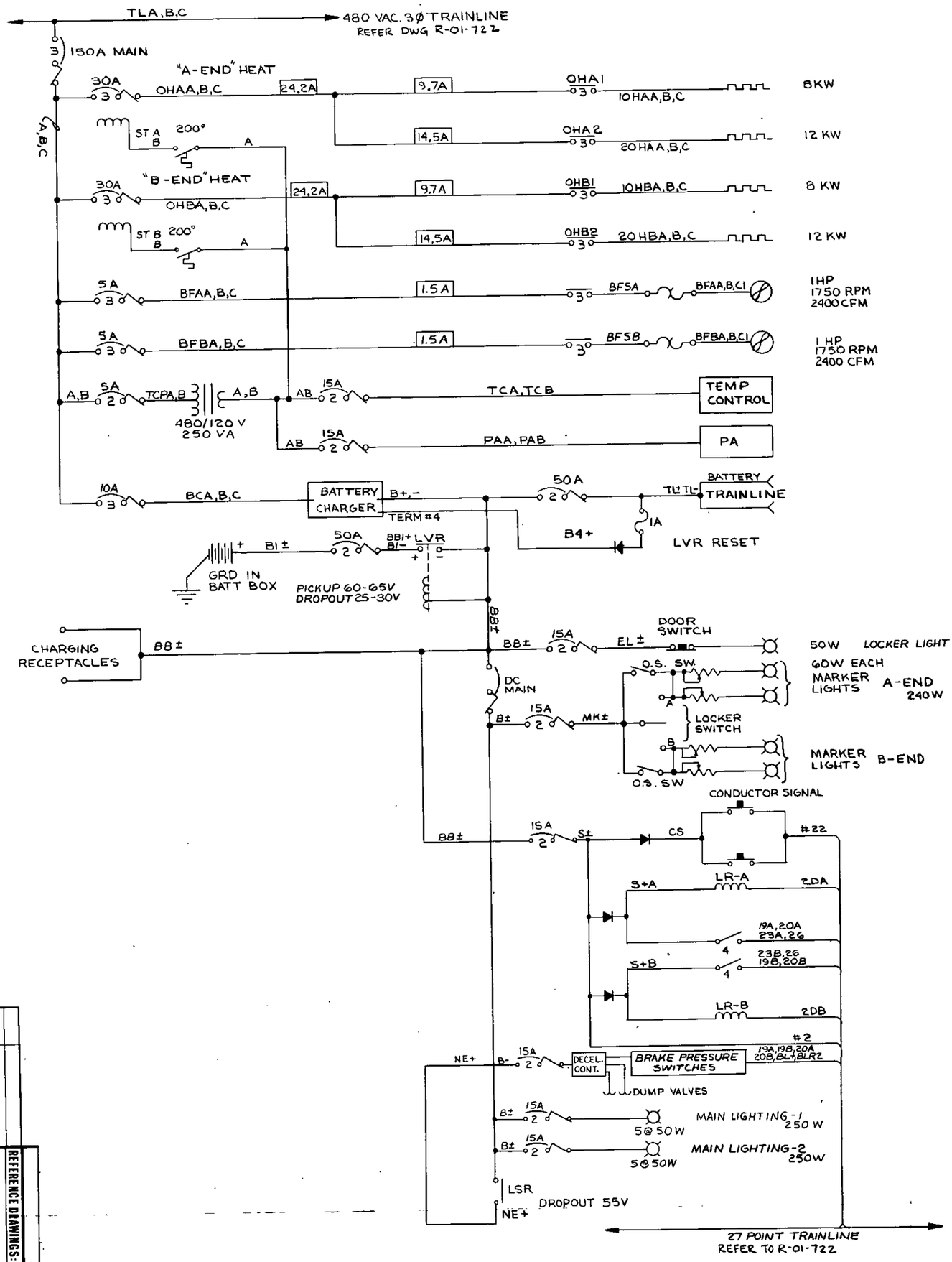

QTY/CAR	USED ON
	1170-77
	1139
	1133-36
	1128-31

REFERENCE DRAWINGS:

EQUIPMENT ENGINEERING

Amtrak

National Railroad Passenger Corporation

TITLE: SINGLE LINE POWER SCHEMATIC BAGGAGE CARS

DRAWN: BCONN 11/21/86

CHECKED: R.BROUSS 11/21/86

APPROVED

APPROVED

SCALE: NONE

DRAWING NO. D-01-1710

REV

REVISIONS

LTR	ZONE	DESCRIPTION	DATE	APP'D

86

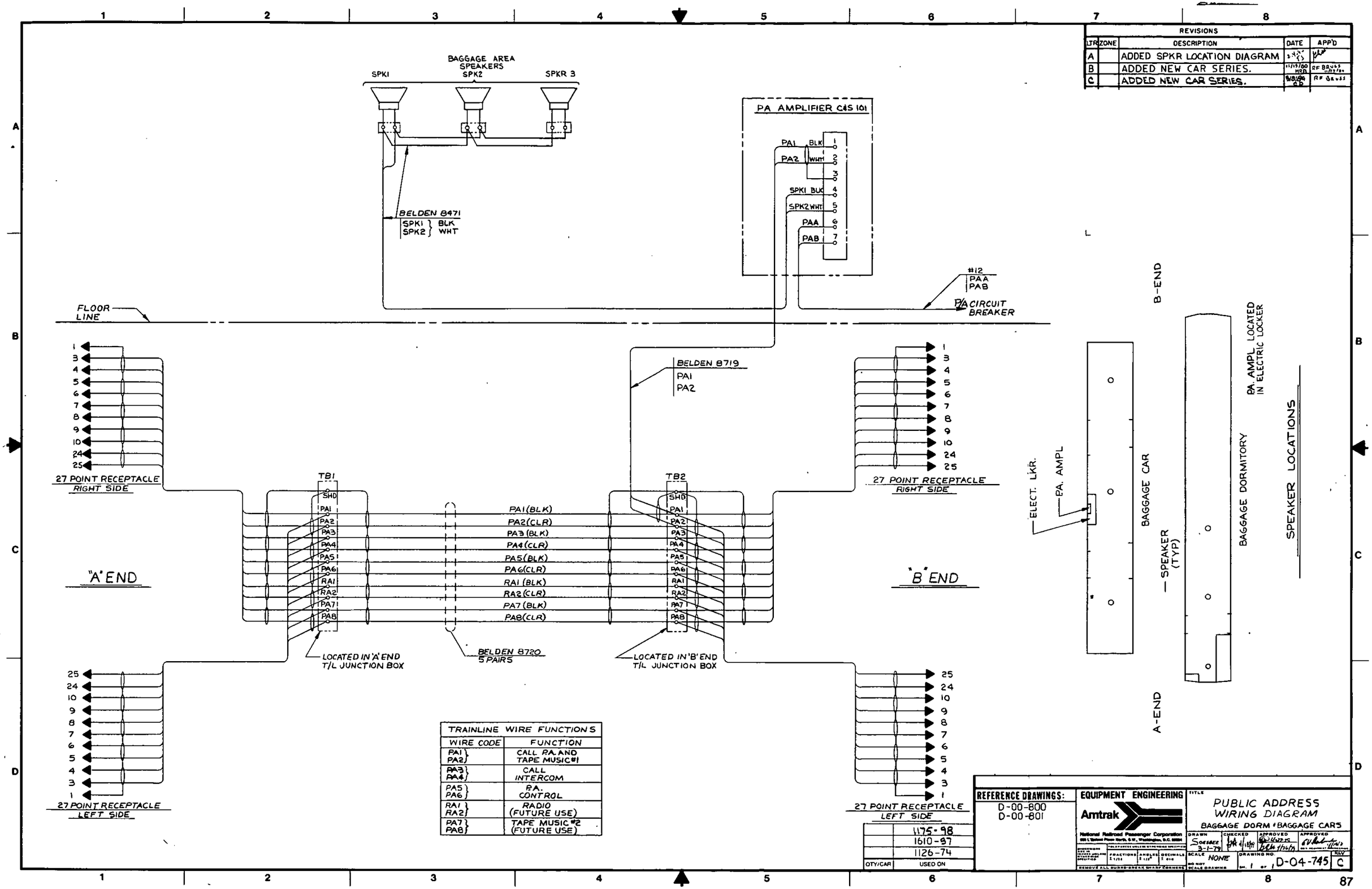

TRAINLINE WIRE FUNCTIONS	
WIRE CODE	FUNCTION
PA1 } PA2 }	CALL P.A. AND TAPE MUSIC #1
PA3 } PA4 }	CALL INTERCOM
PA5 } PA6 }	P.A. CONTROL
RA1 } RA2 }	RADIO (FUTURE USE)
PA7 } PA8 }	TAPE MUSIC #2 (FUTURE USE)

QTY/CAR	USED ON
	1175-98
	1610-97
	1126-74

REVISIONS

LTR	ZONE	DESCRIPTION	DATE	APP'D
A		ADDED SPKR LOCATION DIAGRAM	[illegible]	[illegible]
B		ADDED NEW CAR SERIES.	11/19/80 MRB	RF BRUSS 11/19/80
C		ADDED NEW CAR SERIES.	8/8/84 CD	RF BRUSS

REFERENCE DRAWINGS:
D-00-800
D-00-801

EQUIPMENT ENGINEERING
Amtrak
National Railroad Passenger Corporation
[illegible] L'Enfant Plaza North, S.W., Washington, D.C. 20024

TITLE
PUBLIC ADDRESS WIRING DIAGRAM
BAGGAGE DORM & BAGGAGE CARS

DRAWN Soesbee 3-1-79 | CHECKED [illegible] | APPROVED [illegible] | APPROVED [illegible]

SCALE NONE | DRAWING NO. D-04-745 | REV C

SH. 1 OF 1

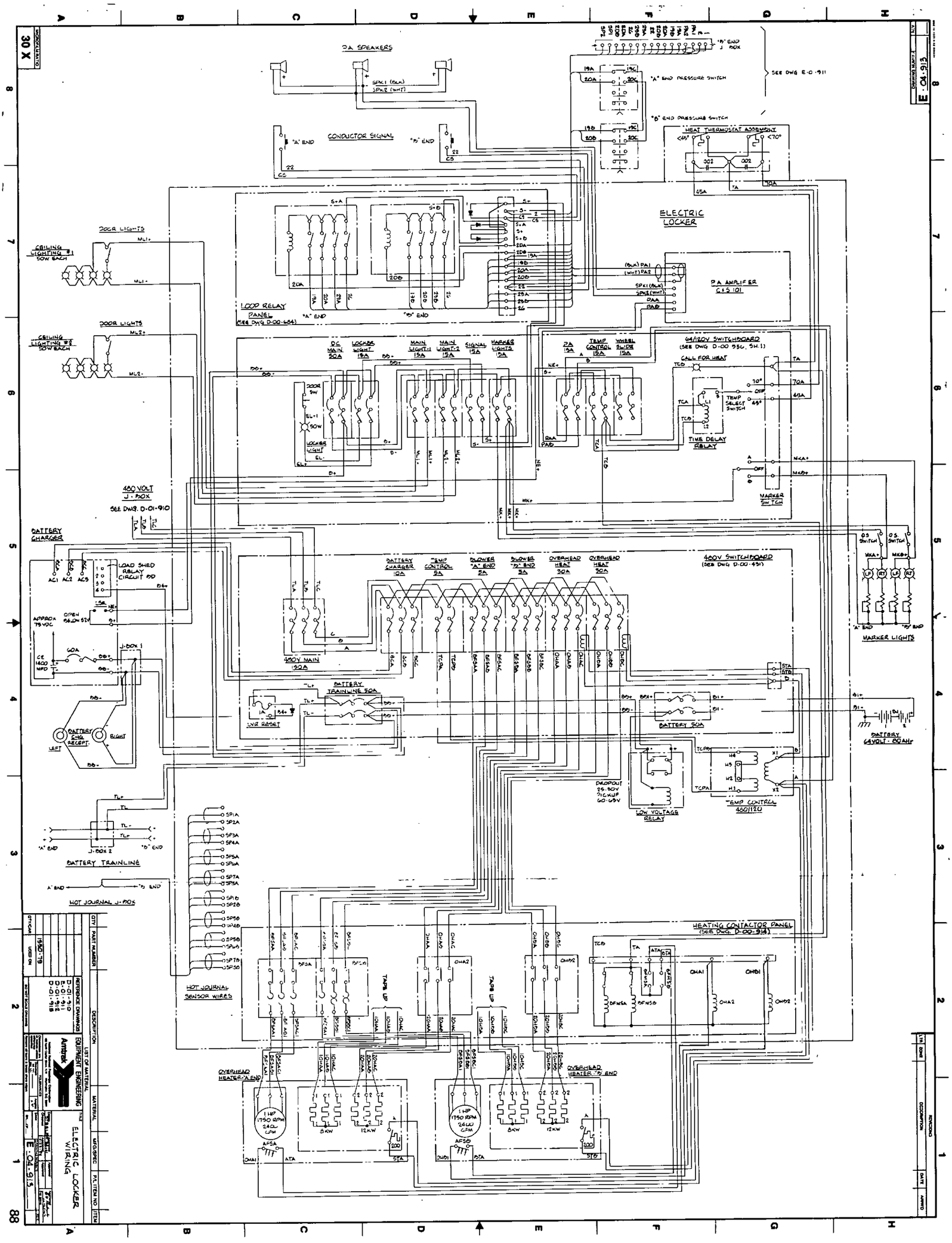

PA SPEAKERS
CONDUCTOR SIGNAL
"A" END PRESSURE SWITCH
"B" END PRESSURE SWITCH
HEAT THERMOSTAT ASSEMBLY
SEE DWG E-0-911
ELECTRIC LOCKER
DOOR LIGHTS
CEILING LIGHTING #1 50W EACH
CEILING LIGHTING #2 50W EACH
LOOP RELAY PANEL (SEE DWG D-00-684)
PA AMPLIFIER C&S 101
64/120V SWITCHBOARD (SEE DWG D-00-936, SH.1)
CALL FOR HEAT
TIME DELAY RELAY
MARKER SWITCH
480 VOLT J-BOX SEE DWG. D-01-910
BATTERY CHARGER
LOAD SHED RELAY CIRCUIT BD
480V SWITCHBOARD (SEE DWG D-00-431)
480V MAIN 150A
BATTERY TRAINLINE 50A
LVR RESET
BATTERY 50A
MARKER LIGHTS
BATTERY 64VOLT-80AHr
LOW VOLTAGE RELAY
TEMP CONTROL 480/120
BATTERY TRAINLINE
HOT JOURNAL J-BOX
HOT JOURNAL SENSOR WIRES
HEATING CONTACTOR PANEL (SEE DWG. D-00-914)
TAPE UP
OVERHEAD HEATER "A" END
OVERHEAD HEATER "B" END
1 HP 1750 RPM 2400 CFM
8KW
12KW
ELECTRIC LOCKER WIRING
E-04-913

116-10-3

REVISIONS

LTR	ZONE	DESCRIPTION	DATE	APPVD

"A" END J-BOX — RECEPTACLES DUMMY LEFT RIGHT

"B" END J-BOX — RECEPTACLES LEFT RIGHT DUMMY

#8 AWG ALL OTHERS #16 AWG EXCEPT SHIELDED WHICH IS 16/2

2DA	2DA	2D LOOP RELAY COIL	2DA
1	1	TD - BATTERY NEGATIVE	
2	2	PA1 - TAPE MUSIC-1 (BLK)	
3	3	PA2 - TAPE MUSIC-2 (WHT)	
4	4	PA5 - PA & INTERCOM (BLK)	
5	5	PA6 - PA & INTERCOM (WHT)	
6	6	PA3 - PA CONTROL (BLK)	
7	7	PA4 - PA CONTROL (WHT)	
8	8	RA1 - RADIO (BLK)	
9	9	RA2 - RADIO (WHT)	
10	10	EP1 - BRAKE APPLICATION	
11	11	EP2 - BRAKE RELEASE	
12	12	EP3 - BRAKE NEGATIVE	
13	13	D1 - DOOR CONTROL	14
14	14	D2 - DOOR CONTROL	15
15	15	D5 - DOOR CONTROL	16
16	16	D6 - DOOR CONTROL	17
17	17	DICA - DOOR CLOSE LIGHT	18
18	19A	BRA - BRAKE RELEASE LIGHT	
19			
20	20A	BAA BRAKE APPLIED LIGHT	
21	21	HJ - HOT JOURNAL	
22	22	CS - CONDUCTOR SIGNAL	
23	25	DC2A - DOOR CLOSE LIGHT	23
24	26	PA7 - TAPE MUSIC-2 (BLK)	
25	25	PA8 - TAPE MUSIC-2 (WHT)	
26	24	RLS - CONDUCTOR DOOR CLOSED LIGHT	
27	27	AN ATTENDANT CALL	
SP1	SP1		SP1
SP2	SP2		SP2

"A" END

19A	1B	19C	19C
20A	1A	20C	20C
	2A		
	2B		

"B" END

1B	19B
1A	20B
2A	
2B	

NOTE POLARITY OF ALL CONNECTIONS

AIR BRAKE PRESSURE SWITCHES

MORE THAN 25 PSIG
"B" OPEN & "A" CLOSED

LESS THAN 10 PSIG
"B" CLOSED & "A" OPEN

(SHOWN BRAKES RELEASED)

P.A. UNIT

PA1(BLK)
PA2(WHT)

CONDUCTOR SIGNAL

B+ 64 VDC
B-
15A

"A" END COND SIGNAL
"B" END COND SIGNAL

"A" END — LR-A
"B" END — LR-B

LOOP RELAY PANEL
(DWG D-00-684)

SP1
SP2
SPARES (TAPE UP)

MICROFILM RATIO
30 X

QTY	PART NUMBER	DESCRIPTION	MATERIAL	MFG/SPEC	P/L ITEM NO	ITEM

LIST OF MATERIAL

REFERENCE DRAWINGS
C-01-1498
C-01-1499
1203-72
1350-79

QTY/CAR — USED ON

DO NOT SCALE DRAWINGS

EQUIPMENT ENGINEERING
Amtrak
National Railroad Passenger Corporation
400 North Capitol Street, N.W. Washington, D.C. 20001

TOLERANCES
Dimensions are in inches unless otherwise specified
Fractions ± Decimals ± Angles ±
Machined surfaces all over
Remove all burrs & break sharp edges

TITLE
27-PT COMMUNICATIONS TRAINING SCHEMATIC

DRAWN — CHECKED — ENGR APPROVAL — MFG APPROVAL — QUALITY ASSURANCE APPROVAL

APPROVED — DATE

SIZE A — CAGE CODE — DWG NO E-01-911 — REV

SH. OF

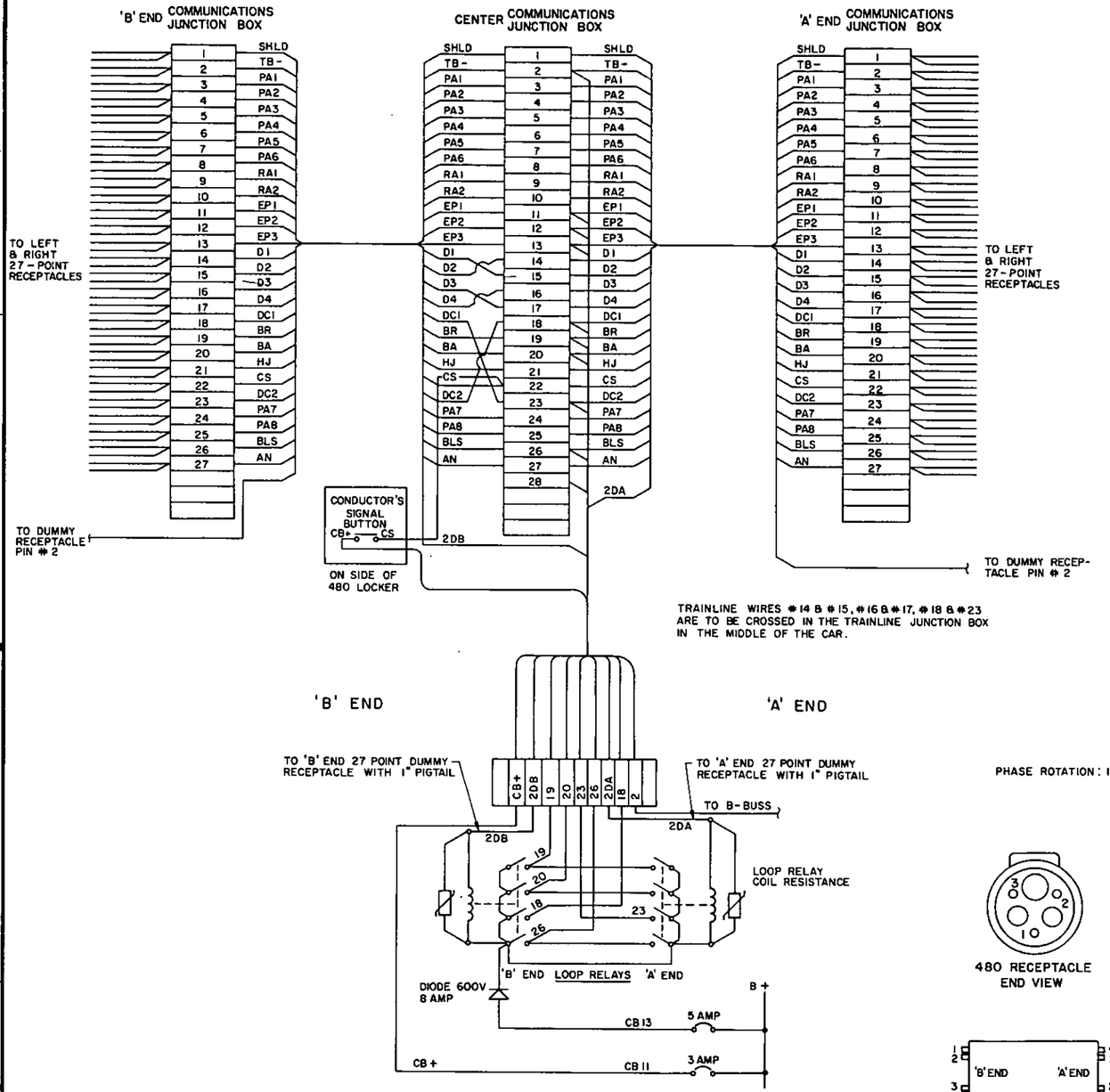

PHASE ROTATION: 1, 2, 3

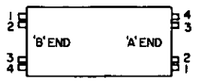

480V TRAINLINE CONTROL WIRES

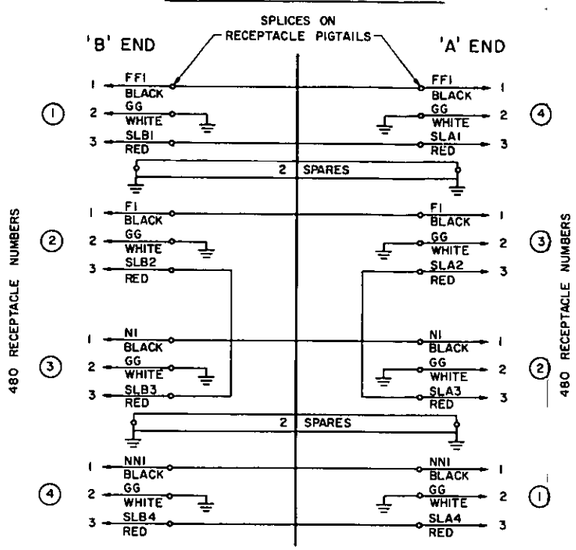

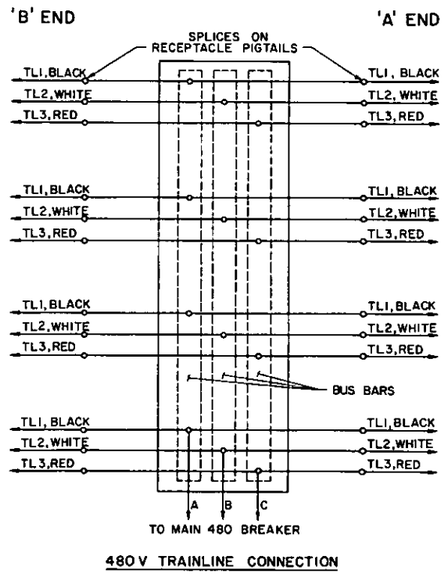

480V TRAINLINE CONNECTION

REVISIONS				
LTR	ZONE	DESCRIPTION	DATE	APP'D

LIST OF 27 PIN WIRES

PIN NO.	WIRE NAME	WIRE FUNCTION
1	SHIELDS	AUDIO CABLE SHIELDS
2	TB	CAR BATTERY NEGATIVE
3	PA1	TAPE MUSIC # 1
4	PA2	TAPE MUSIC # 1
5	PA3	PUBLIC ADDRESS & INTERCOMM
6	PA4	PUBLIC ADDRESS & INTERCOMM
7	PA5	PUBLIC ADDRESS CONTROL
8	PA6	PUBLIC ADDRESS CONTROL
9	RA1	RADIO
10	RA2	RADIO
11	EP1	BRAKE APPLICATION (+)
12	EP2	BRAKE RELEASE (+)
13	EP3	BRAKE NEGATIVE (-)
14	D2B	DOOR CONTROL LEFT SIDE (OPEN)
15	D1B	DOOR CONTROL RIGHT SIDE (OPEN)
16	D4B	DOOR CONTROL LEFT SIDE (CLOSE)
17	D3B	DOOR CONTROL RIGHT SIDE (CLOSE)
18	DC2B	DOOR CLOSE LIGHT (ENGINEMAN'S)
19	BRB	BRAKE RELEASE LIGHT (ENGINEMAN'S)
20	BAB	BRAKE APPLIED LIGHT (ENGINEMAN'S)
21	HJ	HOT JOURNAL LIGHT
22	CS	CONDUCTORS SIGNAL
23	DC1B	CONDUCTORS DOOR CLOSE LIGHT
24	PA7	TAPE MUSIC # 2
25	PA8	TAPE MUSIC # 2
26	BLS	CONDUCTORS DOOR CLOSE LIGHT
27	AN	ATTENDANT CALL

QTY/CAR	USED ON
1	1250-72
2	1203-49
	SOME CARS ONLY: SEE ALSO E-04-722

REFERENCE DRAWINGS:

EQUIPMENT ENGINEERING

Amtrak

National Railroad Passenger Corporation

TITLE: TRAINLINE CIRCUITS HEP BAGGAGE

DRAWN	CHECKED	APPROVED	APPROVED
BREUER 4-17-78	RFBRUS 11/14/80	11/17/80	11/17/80

SCALE: NONE

DRAWING NO: D-04-458

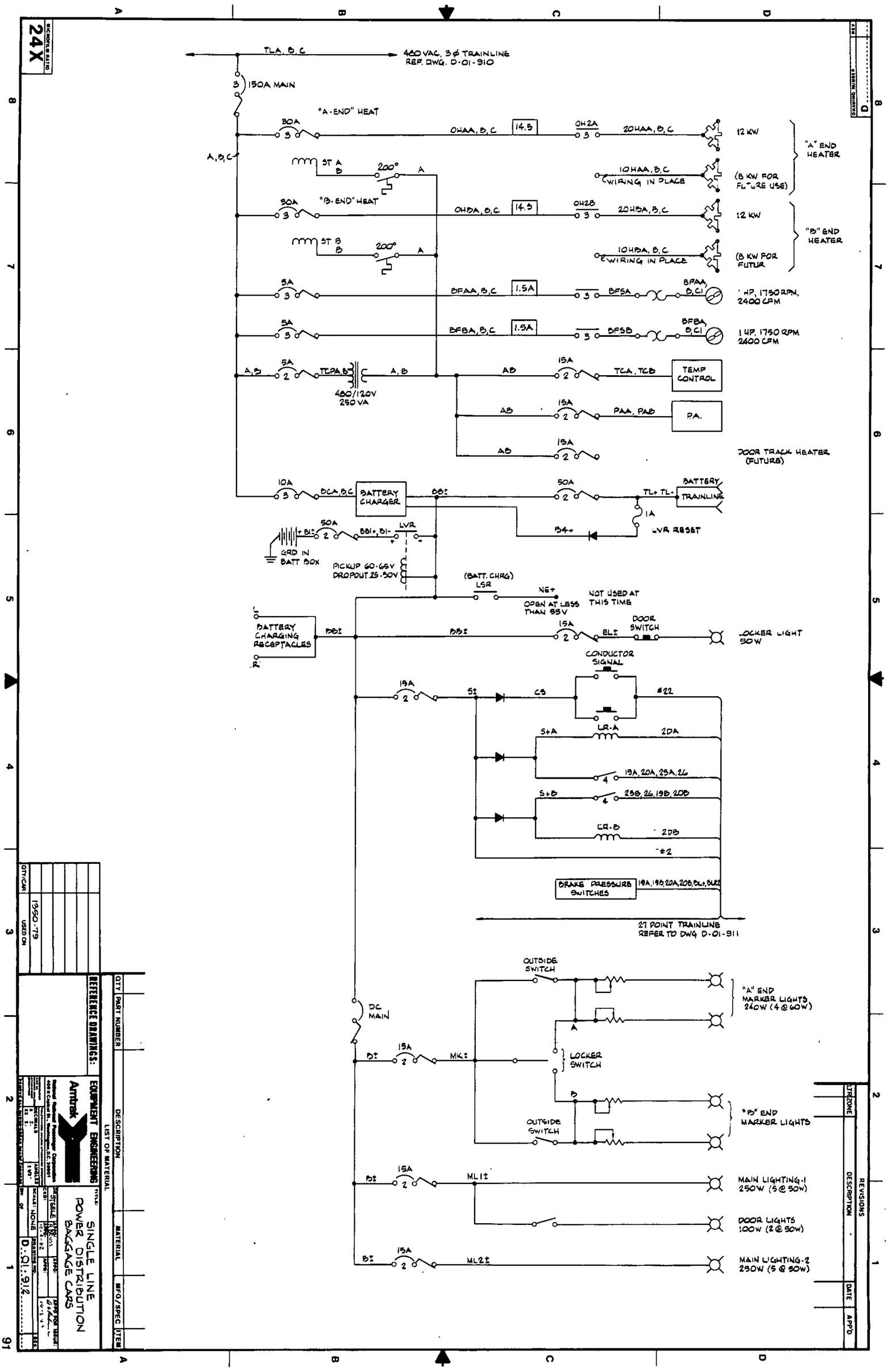

TLA, B, C
480 VAC, 3 ϕ TRAINLINE
REF. DWG. D-01-910
150A MAIN
"A-END" HEAT
30A
OHAA, B, C
14.5
OH2A
20HAA, B, C
12 KW
"A" END HEATER
A, B, C
ST A
200°
10HAA, B, C
WIRING IN PLACE
(8 KW FOR FUTURE USE)
"B-END" HEAT
OHBA, B, C
OH2B
20HBA, B, C
12 KW
"B" END HEATER
ST B
10HBA, B, C
WIRING IN PLACE
(8 KW FOR FUTUR
5A
BFAA, B, C
1.5A
BFSA
BFAA, B, C1
1 HP, 1750 RPM, 2400 CFM
BFBA, B, C
BFSB
BFBA, B, C1
1 HP, 1750 RPM 2400 CFM
A, B
TCPA, B
480/120V 250 VA
AB
15A
TCA, TCB
TEMP CONTROL
PAA, PAB
P.A.
DOOR TRACK HEATER (FUTURE)
10A
BCA, B, C
BATTERY CHARGER
BB±
50A
TL+ TL-
BATTERY TRAINLINE
1A
B4+
LVR RESET
GRD IN BATT BOX
BB1+, B1-
LVR
PICKUP 60-65V
DROPOUT 25-50V
(BATT. CHRG) LSR
NE+
OPEN AT LESS THAN 55V
NOT USED AT THIS TIME
BATTERY CHARGING RECEPTACLES
DOOR SWITCH
EL±
LOCKER LIGHT 50W
CONDUCTOR SIGNAL
S±
CS
#22
S+A
LR-A
2DA
19A, 20A, 25A, 26
S+B
25B, 26, 19B, 20B
LR-B
2DB
#2
BRAKE PRESSURE SWITCHES
19A, 19B, 20A, 20B, BL+, BL-
27 POINT TRAINLINE
REFER TO DWG D-01-911
OUTSIDE SWITCH
"A" END MARKER LIGHTS 240W (4 @ 60W)
DC MAIN
B±
MK±
LOCKER SWITCH
"B" END MARKER LIGHTS
ML1±
MAIN LIGHTING-1 250W (5 @ 50W)
DOOR LIGHTS 100W (2 @ 50W)
ML2±
MAIN LIGHTING-2 250W (5 @ 50W)
REVISIONS
ZONE
DESCRIPTION
DATE
APP'D
QTY
PART NUMBER
DESCRIPTION
MATERIAL
MFG/SPEC
ITEM
LIST OF MATERIAL
REFERENCE DRAWINGS:
EQUIPMENT ENGINEERING
Amtrak
SINGLE LINE POWER DISTRIBUTION BAGGAGE CARS
D-01-912
1350-79
USED ON
QTY/CAR

REVISIONS				
LTR	ZONE	DESCRIPTION	DATE	APP'D

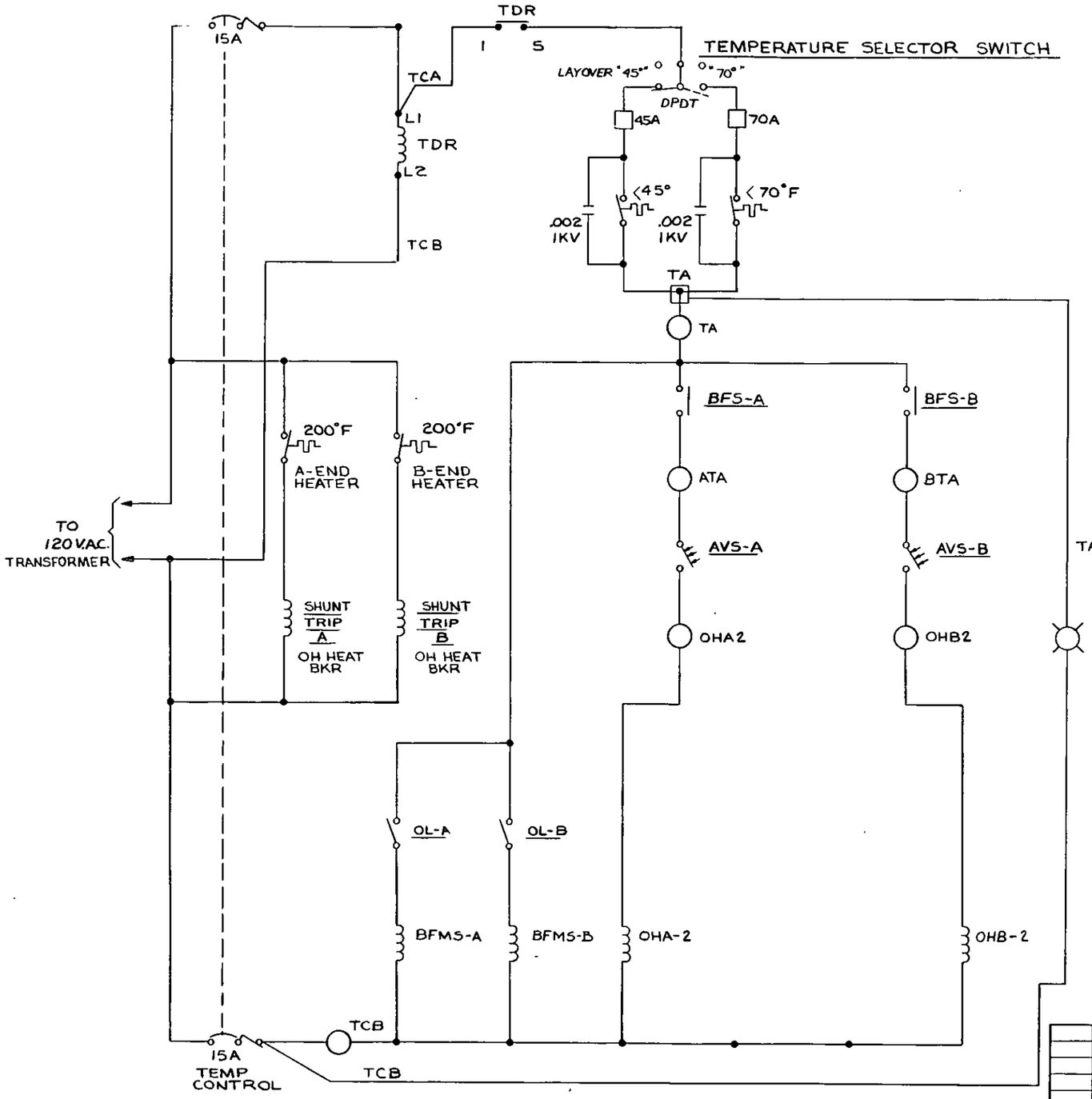

LEGEND

- ○ HEATER CONTACTOR PANEL
- □ LOW VOLTAGE BREAKER PANEL TERMINAL

QTY/CAR	USED ON
	1350-79

REFERENCE DRAWINGS:
D-00-800

EQUIPMENT ENGINEERING
Amtrak
National Railroad Passenger Corporation

TITLE
TEMPERATURE CONTROL SCHEMATIC

DRAWN	CHECKED	APPROVED	APPROVED
10/18/82 J. STEELE	10/18/82 R. BRUSS		

SCALE NONE
DRAWING NO D-01-915
REV

REVISIONS				
LTR	ZONE	DESCRIPTION	DATE	APP'D
A	SH2,3	CHANGED TITLE BLOCK & "USED ON"	9/26/78	
	SH 7	CORRECTION ON WIRE NAMES		
	SH 7, 8 & 12	ADDED WIRE NAMES		
B	SH 1	ADDED 4 CAR NOS. & NOTES 4-7	12/1/78	
C	SH2,3	ADDED ANTIFREEZE HEAT TAPE	12/4/78	
D	SH 5	ADDED NEW SHEET 5A	12/20/78	
E	SH 5	CAR RETROFIT TO CORRECT ANTIFREEZE CYCLING PROBLEMS	7/24/79	
F	SH 1	REMOVED REVISIONS ON SH. 2-14 AND TRANSFERRED TO SH. 1	1/24/83	
	SH2,3	UPDATED ANTIFREEZE SYSTEM		
	SH 5	CHANGED SH. 5A TO SH 5; UPDATED		
	SH 6	UPDATE TEMP CONTROL PANEL POWER FEED & BREAKER		
	SH 7,8	REPLACED FUSES W/CIRCUIT BKRS		
	SH 11	UPDATED		
	SH 12	ADDED ENTRANCE LIGHTS; ADDED WATTS TO LAMPS; ADDED CIRCUITS; CONNECTED TR2 WIRING		
	SH2,3, 5,7,12	REVISED TITLE BLOCKS		2-1-83 RFB
	SH 1-14	CHANGED "USED ON" BLOCK		

LEGEND:

A	AMPERE
AC	ALTERNATING CURRENT
AF	ANTIFREEZE
AH	AMPERE HOUR
BFMS	BLOWER FAN CONTACTOR
CMR	COOL MODULATION RELAY
CM	COMPRESSOR
CN	CONDENSOR
CT	CONTROL TRANSFORMER
DC	DIRECT CURRENT
DR	DUCT RELAY
EFC	EXHAUST FAN CONTACTOR
EV	EVAPORATOR
F	FAHRENHEIT
FH	FLOOR HEAT CONTACTORS
GRN	GROUND
HC	HEAT CONTROL
HCR	HEAT COOL RELAY
HP/LP	HIGH PRESSURE / LOW PRESSURE
HP	HIGH PRESSURE
HP	HORSE POWER
KVA	KILOVOLT AMPERE
LP	LOW PRESSURE
LW	LOW WATER LEVEL RELAY
NiCd	NICKEL-CADIUM
OL	OVERLOAD
OH	OVERHEAD HEAT
OS	OUTSIDE TEMPERATURE
OVRD	COOLING OVERIDE
PIV	PEAK INVERSE VOLTAGE
PSIG	POUND PER SQUARE INCH GAGE
RCMC	A/C COMPRESSOR & CONDENSER MOTORS CONTACTOR
T	THERMOSTAT
TDR	TIME DELAY RELAY
VAC	VOLTS ALTERNATING CURRENT
VDC	VOLTS DIRECT CURRENT
Ω	OHM
μfd	MICRO FARAD

PACIFIC CONVERSION

CAR NUMBERS

ORIGINAL	NEW
2600	2900
2603	2903
2611	2911
2615	2915
2617	2917
2620	2920
2623	2923
2633	2933
2640	2940
2641	2941
2613	2913
2624	2924
2632	2932

PINE CONVERSION

CAR NUMBERS

ORIGINAL	NEW
2714	2980
2715	2981
2729	2982
2710	2983
2713	2984
2723	2985
2726	2986
2732	2987
2716	2988
2717	2989
2721	2990
2711	2991
2728	2992
2720	2993
2725	2994
2712	2995
2733	2996
2731	2997

NOTES:

1. [2.5A] INDICATES NORMAL CURRENT IN CIRCUIT.
2. FILLED IN DOTS ARE TERMINAL BLOCKS.
3. NOTES IN PARENTHESIS INDICATE LOCATION.
4. ALL RELAYS & CONTACTORS SHOWN DROPPED OUT.
5. ALL PRESSURE SWITCHES SHOWN WITH ZERO PSIG PRESSURE ON SYSTEM.
6. ALL THERMOSTATS SHOWN AT LESS THAN 0°F
7. FOR ELECTRICAL SYMBOLS SEE AMTRAK DRAWING D-04-414

2900-97
USED ON

REFERENCE DRAWINGS:

EQUIPMENT ENGINEERING
Amtrak
National Railroad Passenger Corporation

TITLE: SCHEMATIC LEGEND & CAR NUMBER TABULATION 2900 CLASS SLEEPERS

DRAWN 8-11-78 | CHECKED DEO 8-11-78 | APPROVED | APPROVED

SCALE NONE | DRAWING NO D-04-440 | REV F

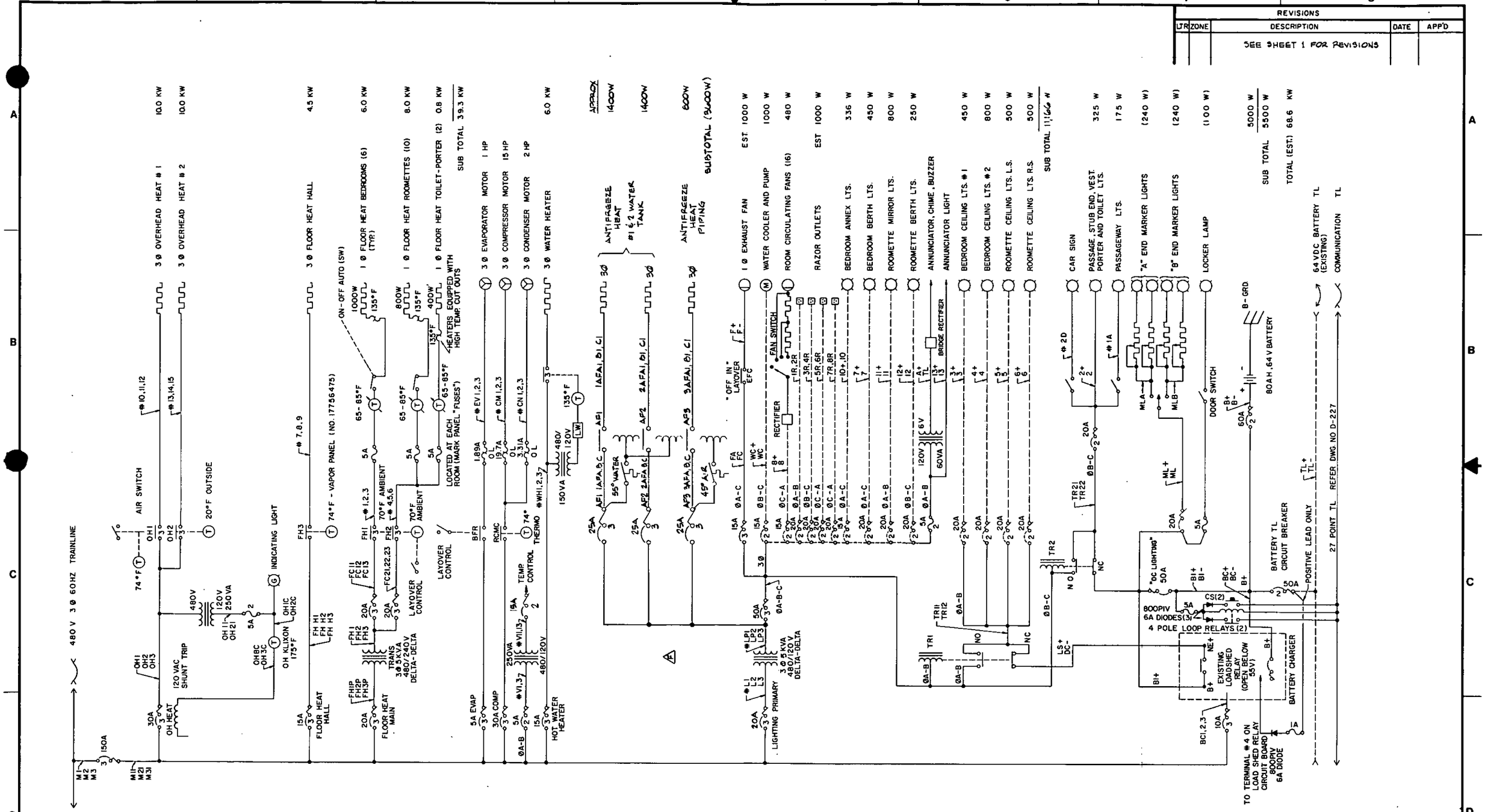

NOTES:
1. EXISTING WIRING SHOWN DOTTED.
2. CHANGE LAMPS FROM 30V TO 120V
3. BALANCE 120V LOADS ON 3 PHASE CIRCUITS AS SHOWN.
4. SPLIT RAZOR CIRCUIT TO (4) FOUR CIRCUITS

REVISIONS				
LTR	ZONE	DESCRIPTION	DATE	APP'D
		SEE SHEET 1 FOR REVISIONS		

REFERENCE DRAWINGS:

2900 - 41
USED ON

EQUIPMENT ENGINEERING
Amtrak
National Railroad Passenger Corporation

TITLE: SINGLE LINE POWER SCHEMATIC

DRAWN	CHECKED	APPROVED	APPROVED
BREUER 12-1-77	RFB 6-1-78		

SCALE: NONE
DRAWING NO: D-04-440 REV T
SH. 2 OF 12

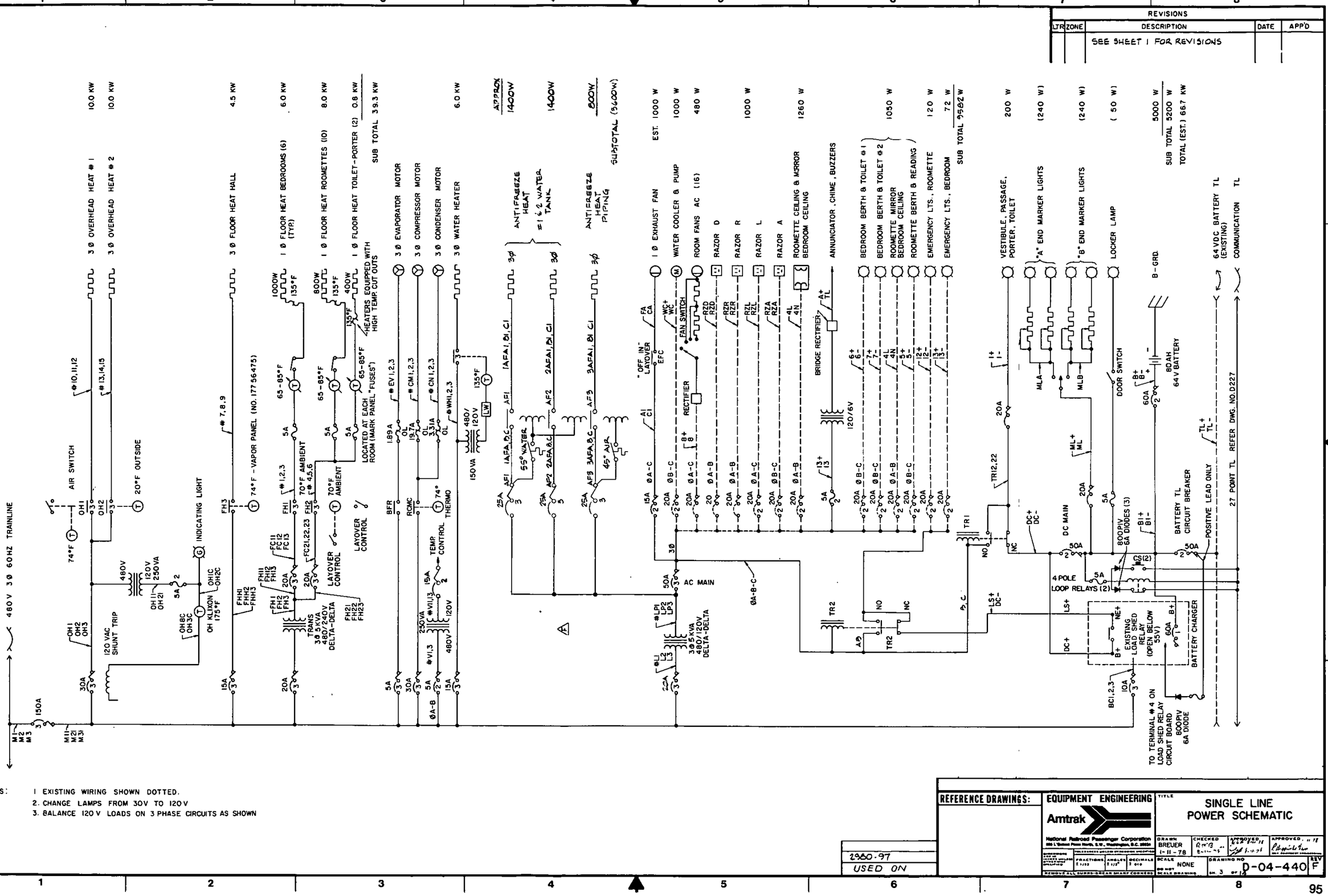

REVISIONS				
LTR	ZONE	DESCRIPTION	DATE	APP'D
		SEE SHEET 1 FOR REVISIONS		

REVISIONS				
LTR	ZONE	DESCRIPTION	DATE	APP'D
		SEE SHEET 1 FOR REVISIONS		

480 SWITCH PANEL

480 TRAINLINE

480 CONTROL WIRES

MATCH LINE SHEET 5(5A)

M12 M22 M32

480 SWITCH BOARD

150 A

480 MAIN BREAKER (IN 480 LOCKER)

M1 M2 M3

ØA ØB ØC

POWER PINS

PIGTAIL CONNECTIONS

480 RECEPTACLE NUMBERS

①	1	BLACK	TL1	TL1	#10 WIRE	BLACK	1
	2	WHITE	TL2	TL2		WHITE	2
	3	RED	TL3	TL3		RED	3
②	1	BLACK	TL1	TL1		BLACK	1
	2	WHITE	TL2	TL2		WHITE	2
	3	RED	TL3	TL3		RED	3
③	1	BLACK	TL1	TL1		BLACK	1
	2	WHITE	TL2	TL2		WHITE	2
	3	RED	TL3	TL3		RED	3
④	1	BLACK	TL1	TL1		BLACK	1
	2	WHITE	TL2	TL2		WHITE	2
	3	RED	TL3	TL3		RED	3

BUS BARS

480 JUNCTION BOX (UNDER CAR)

480 RECEPTACLE NUMBERS

④	1	BLACK	TL1	TL1	#10 WIRE	BLACK	1
	2	WHITE	TL2	TL2		WHITE	2
	3	RED	TL3	TL3		RED	3
③	1	BLACK	TL1	TL1		BLACK	1
	2	WHITE	TL2	TL2		WHITE	2
	3	RED	TL3	TL3		RED	3
②	1	BLACK	TL1	TL1		BLACK	1
	2	WHITE	TL2	TL2		WHITE	2
	3	RED	TL3	TL3		RED	3
①	1	BLACK	TL1	TL1		BLACK	1
	2	WHITE	TL2	TL2		WHITE	2
	3	RED	TL3	TL3		RED	3

'B' END

'A' END

PHASE ROTATION 1, 2, 3

480 RECEPTACLE END VIEW

CONTROL PINS

PIGTAIL CONNECTIONS

480 RECEPTACLE NUMBERS

①	1	BLACK	1B	1A	#10 GAUGE WIRE	BLACK	1
	2	WHITE				WHITE	2
	3	RED				RED	3
②	1	BLACK	2B	2A		BLACK	1
	2	WHITE				WHITE	2
	3	RED				RED	3
③	1	BLACK	3B	3A		BLACK	1
	2	WHITE				WHITE	2
	3	RED				RED	3
④	1	BLACK	4B	4A		BLACK	1
	2	WHITE				WHITE	2
	3	RED				RED	3

(UNDERCAR) (UNDERCAR)

480 RECEPTACLE NUMBERS

480 RECEPTACLE NUMBERING

2900-97 USED ON

REFERENCE DRAWINGS:

EQUIPMENT ENGINEERING

Amtrak

National Railroad Passenger Corporation

TITLE: 480 MAIN TRAINLINE POWER SCHEMATIC

DRAWN	CHECKED	APPROVED	APPROVED
5-18-78	9-11-78	9-11-78	

SCALE NONE — DRAWING NO D-04-440 SH 4 OF 14 — REV F

DO NOT SCALE DRAWING

REMOVE ALL BURRS-BREAK SHARP CORNERS

96

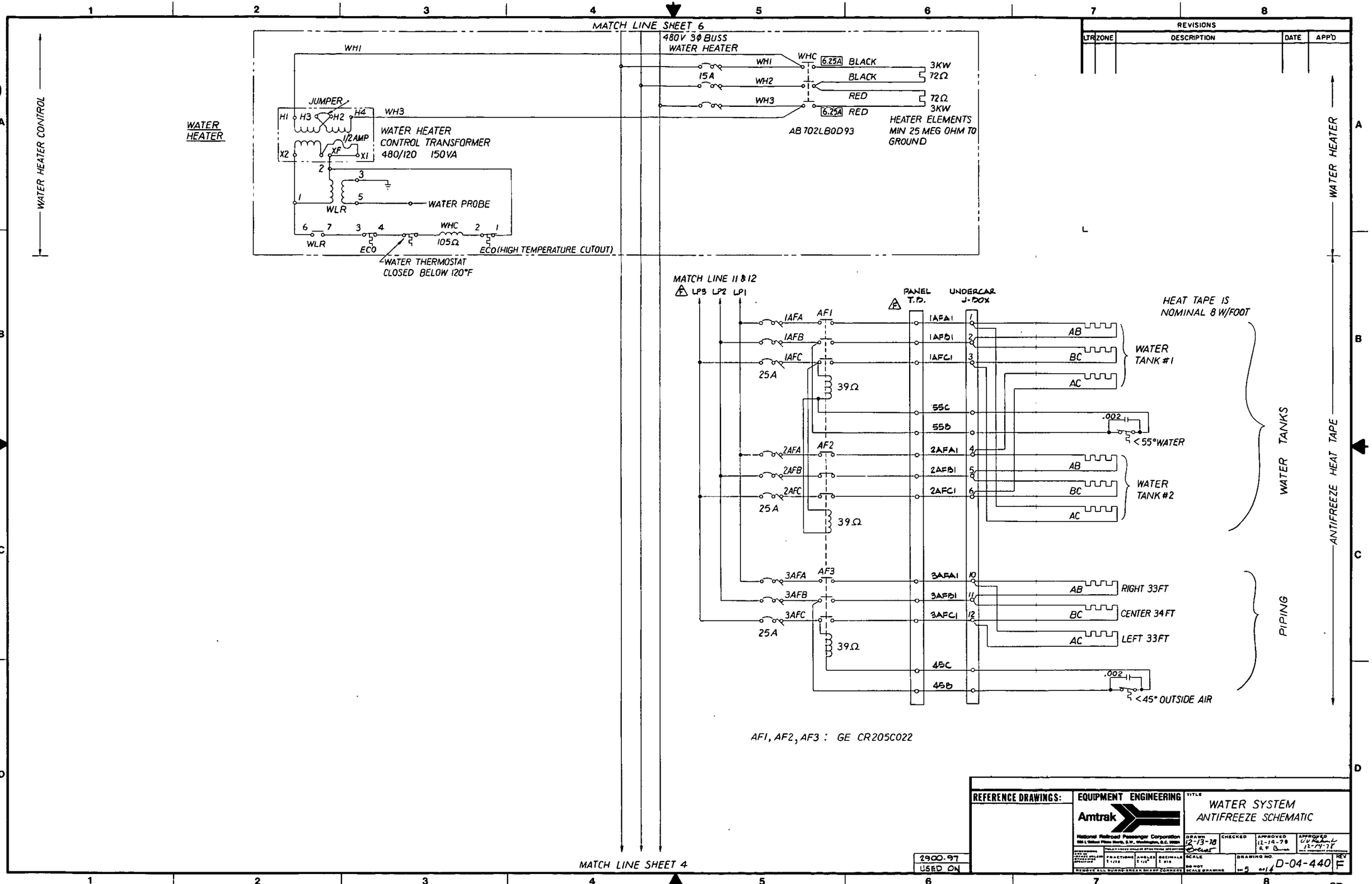
MATCH LINE SHEET 6
480V 3Φ BUSS
WATER HEATER
WATER HEATER CONTROL
WATER HEATER
WH1
WH2
WH3
WHC
6.25A BLACK
BLACK
RED
RED
15A
3KW
72Ω
72Ω
3KW
HEATER ELEMENTS
MIN 25 MEG OHM TO
GROUND
AB702LB0D93
JUMPER
H1 H3 H2 H4
1/2AMP
X2 XF X1
WATER HEATER
CONTROL TRANSFORMER
480/120 150VA
WLR
WATER PROBE
WHC
105Ω
ECO
ECO (HIGH TEMPERATURE CUTOUT)
WATER THERMOSTAT
CLOSED BELOW 120°F
MATCH LINE 11 & 12
LP3 LP2 LP1
PANEL T.B.
UNDERCAR J-BOX
HEAT TAPE IS
NOMINAL 8 W/FOOT
1AFA AF1
1AFB
1AFC
25A
39Ω
1AFA1
1AFB1
1AFC1
AB
BC
AC
WATER
TANK #1
55C
55B
.002
<55° WATER
2AFA AF2
2AFB
2AFC
2AFA1
2AFB1
2AFC1
WATER
TANK #2
WATER TANKS
3AFA AF3
3AFB
3AFC
3AFA1
3AFB1
3AFC1
RIGHT 33FT
CENTER 34FT
LEFT 33FT
PIPING
45C
45B
<45° OUTSIDE AIR
ANTIFREEZE HEAT TAPE
WATER HEATER
AF1, AF2, AF3 : GE CR205C022
MATCH LINE SHEET 4
2900-97
USED ON
REFERENCE DRAWINGS:
EQUIPMENT ENGINEERING
Amtrak
National Railroad Passenger Corporation
TITLE
WATER SYSTEM
ANTIFREEZE SCHEMATIC
DRAWN 12-13-78
CHECKED
APPROVED 12-14-78
APPROVED 12-14-78
SCALE
DRAWING NO. D-04-440
REV F
SH 5 OF 14
REVISIONS
LTR ZONE DESCRIPTION DATE APP'D

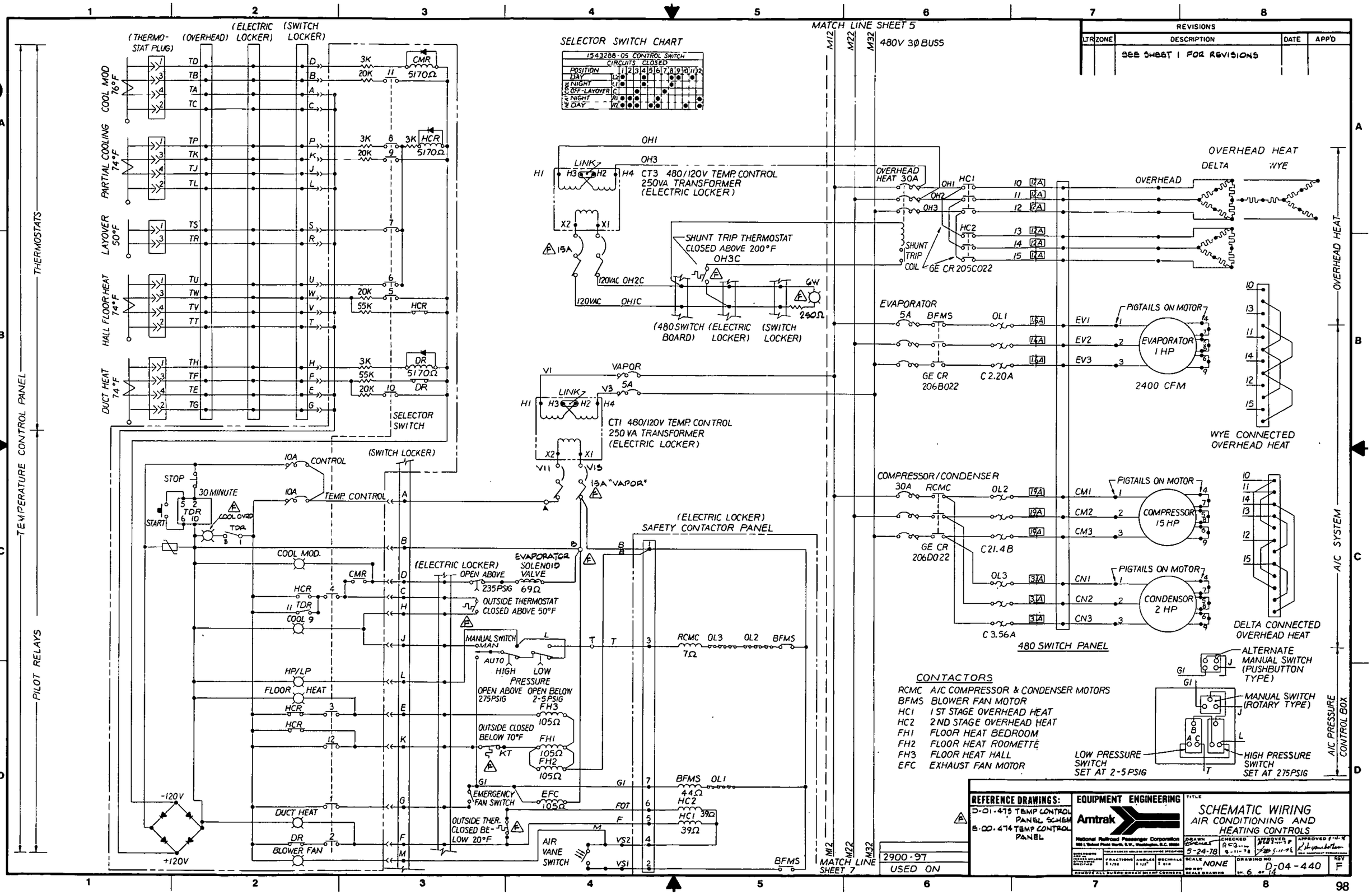

REVISIONS
LTR ZONE DESCRIPTION DATE APP'D
SEE SHEET 1 FOR REVISIONS
MATCH LINE SHEET 5
480V 3Ø BUSS
SELECTOR SWITCH CHART
1543288-05 CONTROL SWITCH
CIRCUITS CLOSED
POSITION
DAY
NIGHT
OFF-LAYOVER
NIGHT
DAY
(THERMO-STAT PLUG)
(OVERHEAD)
(ELECTRIC LOCKER)
(SWITCH LOCKER)
COOL MOD 76°F
PARTIAL COOLING 74°F
LAYOVER 50°F
HALL FLOOR HEAT 74°F
DUCT HEAT 74°F
CMR 5170Ω
HCR 5170Ω
DR 5170Ω
SELECTOR SWITCH
THERMOSTATS
TEMPERATURE CONTROL PANEL
PILOT RELAYS
CT3 480/120V TEMP. CONTROL 250VA TRANSFORMER (ELECTRIC LOCKER)
SHUNT TRIP THERMOSTAT CLOSED ABOVE 200°F
OH3C
(480 SWITCH BOARD)
(ELECTRIC LOCKER)
(SWITCH LOCKER)
CT1 480/120V TEMP. CONTROL 250 VA TRANSFORMER (ELECTRIC LOCKER)
15A "VAPOR"
OVERHEAD HEAT 30A
SHUNT TRIP COIL
GE CR 205C022
OVERHEAD HEAT
DELTA
WYE
OVERHEAD
EVAPORATOR
GE CR 206B022
C 2.20A
PIGTAILS ON MOTOR
EVAPORATOR 1 HP
2400 CFM
WYE CONNECTED OVERHEAD HEAT
COMPRESSOR/CONDENSER
GE CR 206D022
C 21.4B
COMPRESSOR 15 HP
CONDENSOR 2 HP
C 3.56A
480 SWITCH PANEL
DELTA CONNECTED OVERHEAD HEAT
A/C SYSTEM
A/C PRESSURE CONTROL BOX
STOP
30 MINUTE
START
COOL OVRD
TDR
CONTROL
TEMP. CONTROL
COOL MOD.
COOL
HP/LP
FLOOR HEAT
DUCT HEAT
BLOWER FAN
-120V
+120V
(ELECTRIC LOCKER) SAFETY CONTACTOR PANEL
(ELECTRIC LOCKER) OPEN ABOVE 235PSIG
EVAPORATOR SOLENOID VALVE 69Ω
OUTSIDE THERMOSTAT CLOSED ABOVE 50°F
MANUAL SWITCH
AUTO
HIGH
LOW
PRESSURE
OPEN ABOVE 275PSIG
OPEN BELOW 2-5PSIG
OUTSIDE CLOSED BELOW 70°F
EMERGENCY FAN SWITCH
OUTSIDE THER. CLOSED BELOW 20°F
AIR VANE SWITCH
RCMC 7Ω
BFMS 44Ω
HC2 39Ω
HC1 39Ω
CONTACTORS
RCMC A/C COMPRESSOR & CONDENSER MOTORS
BFMS BLOWER FAN MOTOR
HC1 1 ST STAGE OVERHEAD HEAT
HC2 2 ND STAGE OVERHEAD HEAT
FH1 FLOOR HEAT BEDROOM
FH2 FLOOR HEAT ROOMETTE
FH3 FLOOR HEAT HALL
EFC EXHAUST FAN MOTOR
ALTERNATE MANUAL SWITCH (PUSHBUTTON TYPE)
MANUAL SWITCH (ROTARY TYPE)
LOW PRESSURE SWITCH SET AT 2-5 PSIG
HIGH PRESSURE SWITCH SET AT 275PSIG
MATCH LINE SHEET 7
2900-97
USED ON
REFERENCE DRAWINGS:
D-01-473 TEMP CONTROL PANEL SCHEM
E-00-474 TEMP CONTROL PANEL
EQUIPMENT ENGINEERING
Amtrak
National Railroad Passenger Corporation
TITLE
SCHEMATIC WIRING
AIR CONDITIONING AND HEATING CONTROLS
DRAWN 5-24-78
CHECKED
APPROVED
SCALE NONE
DRAWING NO. D-04-440
SH. 6 OF 14
REV F

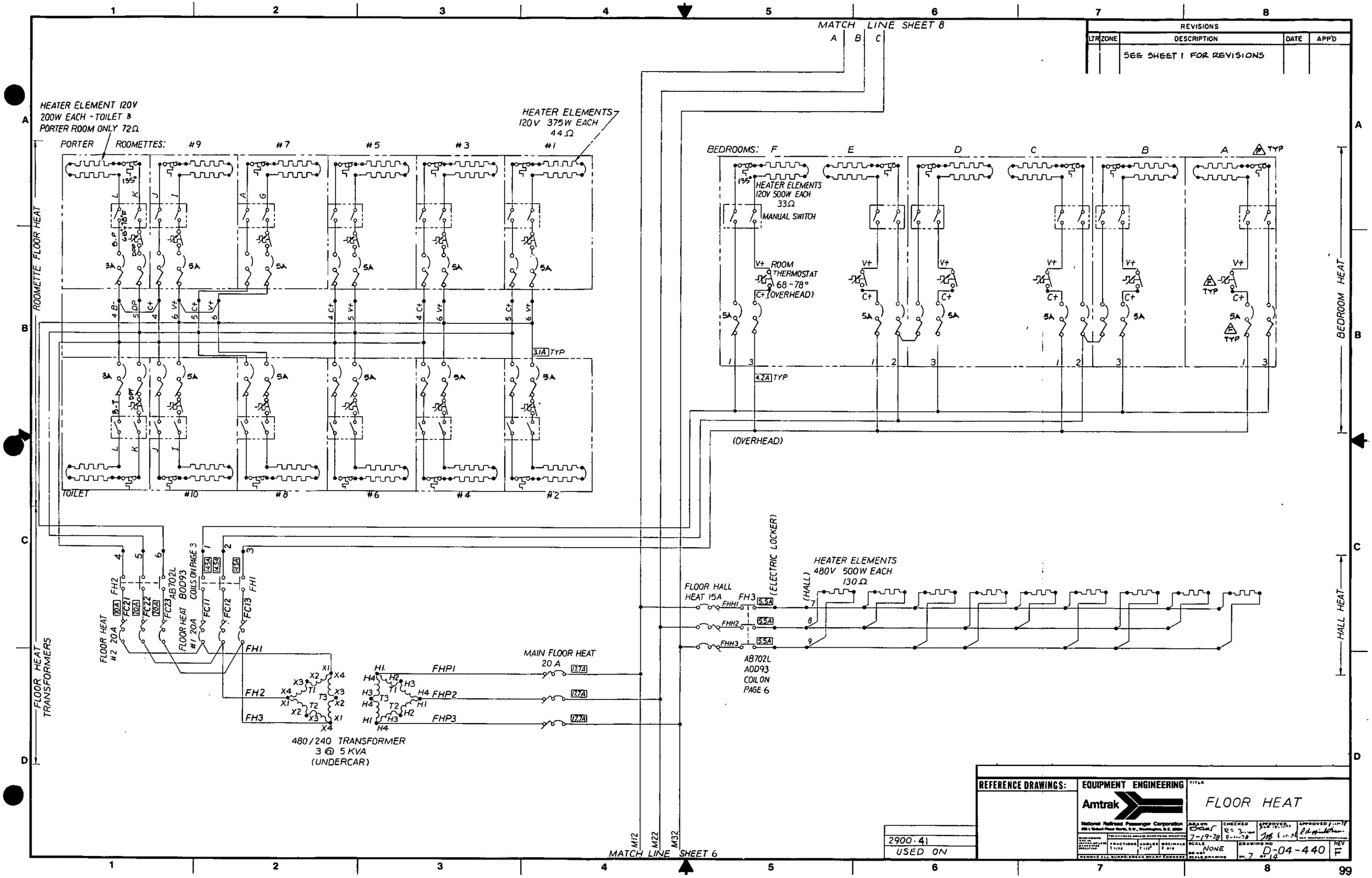

MATCH LINE SHEET 8
REVISIONS
LTR ZONE DESCRIPTION DATE APP'D
SEE SHEET 1 FOR REVISIONS
HEATER ELEMENT 120V
200W EACH - TOILET &
PORTER ROOM ONLY 72Ω
PORTER ROOMETTES: #9 #7 #5 #3 #1
HEATER ELEMENTS
120V 375W EACH
44Ω
ROOMETTE FLOOR HEAT
TOILET #10 #8 #6 #4 #2
3.1A TYP
BEDROOMS: F E D C B A
HEATER ELEMENTS
120V 500W EACH
33Ω
MANUAL SWITCH
ROOM THERMOSTAT
68-78°
(OVERHEAD)
4.2A TYP
(OVERHEAD)
BEDROOM HEAT
FLOOR HEAT #2 20A
FLOOR HEAT #1 20A
AB702L
BOD93
COILS ON PAGE 3
FLOOR HEAT TRANSFORMERS
FH1
FH2
FH3
FHP1
FHP2
FHP3
480/240 TRANSFORMER
3 @ 5 KVA
(UNDERCAR)
MAIN FLOOR HEAT
20 A
FLOOR HALL
HEAT 15A
(ELECTRIC LOCKER)
(HALL)
HEATER ELEMENTS
480V 500W EACH
130Ω
AB702L
AOD93
COIL ON
PAGE 6
HALL HEAT
M12 M22 M32
MATCH LINE SHEET 6
2900-41
USED ON
REFERENCE DRAWINGS:
EQUIPMENT ENGINEERING
Amtrak
National Railroad Passenger Corporation
TITLE
FLOOR HEAT
DRAWN 7-19-78
CHECKED
APPROVED
SCALE NONE
DRAWING NO D-04-440
SH. 7 OF 14
REV F

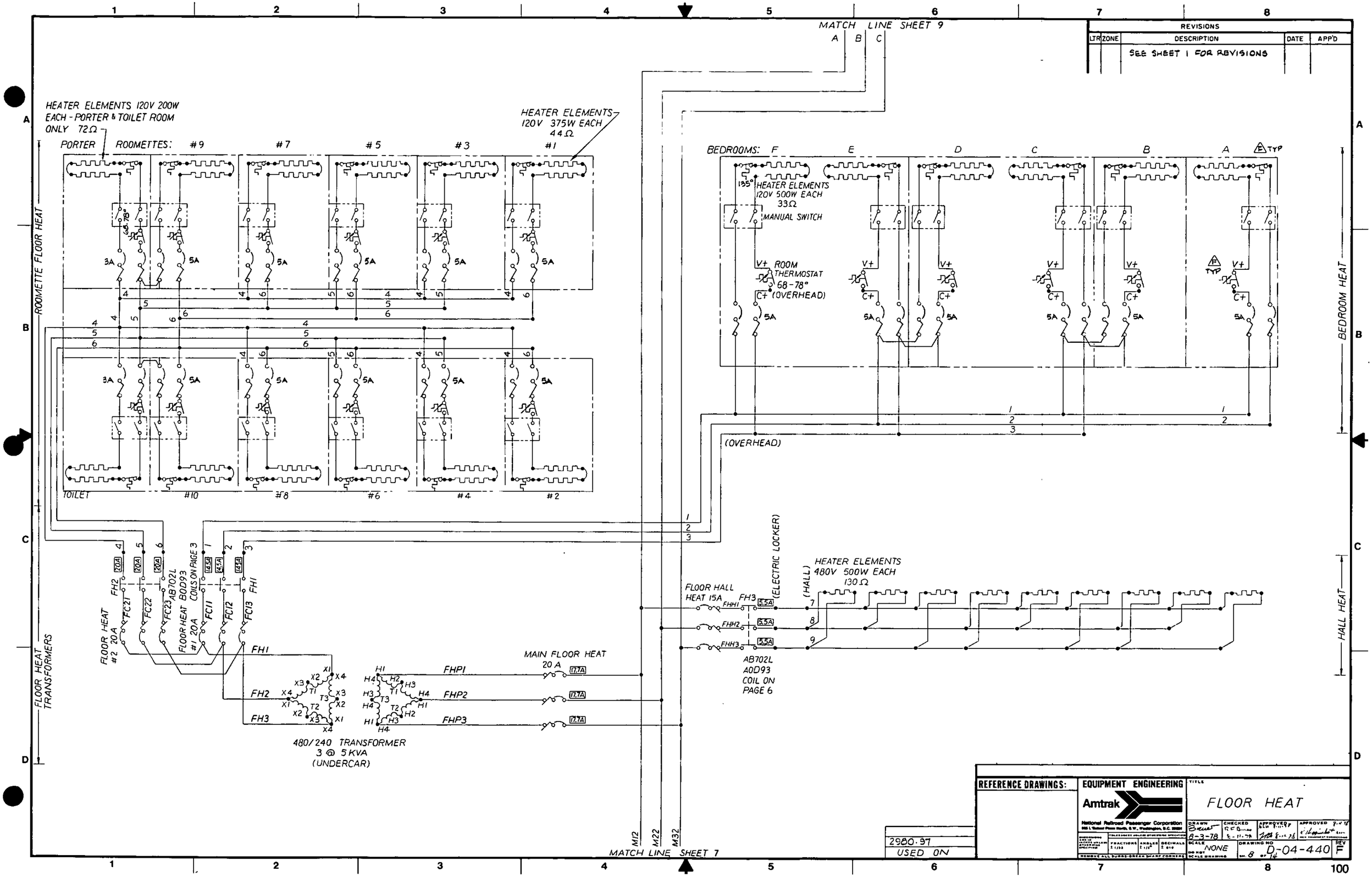

REVISIONS				
LTR	ZONE	DESCRIPTION	DATE	APP'D
		SEE SHEET 1 FOR REVISIONS		

REFERENCE DRAWINGS:

EQUIPMENT ENGINEERING
Amtrak
National Railroad Passenger Corporation

TITLE: FLOOR HEAT

DRAWN 8-3-78 | CHECKED | APPROVED | APPROVED

SCALE NONE | DRAWING NO D-04-440 | REV F

SH. 8 OF 14

2980-97
USED ON

100

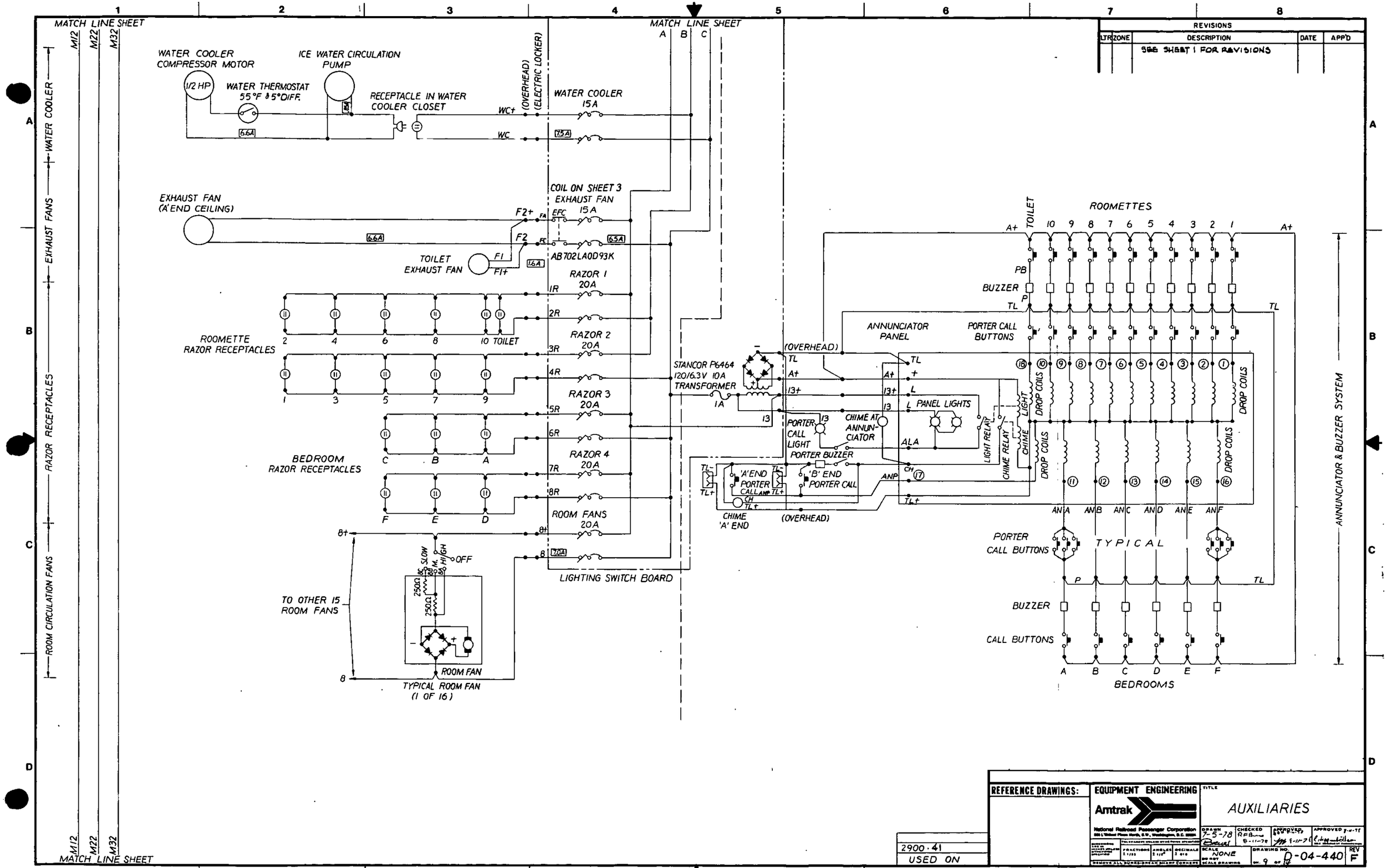

MATCH LINE SHEET
M12
M22
M32
WATER COOLER
EXHAUST FANS
RAZOR RECEPTACLES
ROOM CIRCULATION FANS
WATER COOLER COMPRESSOR MOTOR
1/2 HP
WATER THERMOSTAT 55°F & 5°DIFF.
ICE WATER CIRCULATION PUMP
RECEPTACLE IN WATER COOLER CLOSET
WC+
WC
(OVERHEAD) (ELECTRIC LOCKER)
WATER COOLER 15A
EXHAUST FAN (A'END CEILING)
COIL ON SHEET 3 EXHAUST FAN 15A
F2+
F2
EFC
AB702LA0D93K
TOILET EXHAUST FAN
F1
F1+
RAZOR 1 20A
RAZOR 2 20A
RAZOR 3 20A
RAZOR 4 20A
ROOM FANS 20A
ROOMETTE RAZOR RECEPTACLES
BEDROOM RAZOR RECEPTACLES
TOILET
LIGHTING SWITCH BOARD
TO OTHER 15 ROOM FANS
SLOW
M.
HIGH
OFF
250Ω
ROOM FAN
TYPICAL ROOM FAN (1 OF 16)
STANCOR P6464 120/6.3V 10A TRANSFORMER
1A
(OVERHEAD)
TL
A+
13+
13
PORTER CALL LIGHT
CHIME AT ANNUNCIATOR
PORTER BUZZER
'A' END PORTER CALL
'B' END PORTER CALL
CHIME 'A' END
ANNUNCIATOR PANEL
PANEL LIGHTS
LIGHT RELAY
CHIME RELAY
LIGHT
CHIME
DROP COILS
ROOMETTES
PB
BUZZER
PORTER CALL BUTTONS
TYPICAL
CALL BUTTONS
BEDROOMS
ANNUNCIATOR & BUZZER SYSTEM
REVISIONS
LTR ZONE DESCRIPTION DATE APP'D
SEE SHEET 1 FOR REVISIONS
REFERENCE DRAWINGS:
EQUIPMENT ENGINEERING
Amtrak
National Railroad Passenger Corporation
TITLE
AUXILIARIES
DRAWN 7-5-78
CHECKED
APPROVED
SCALE NONE
DRAWING NO. D-04-440
REV F
2900-41
USED ON

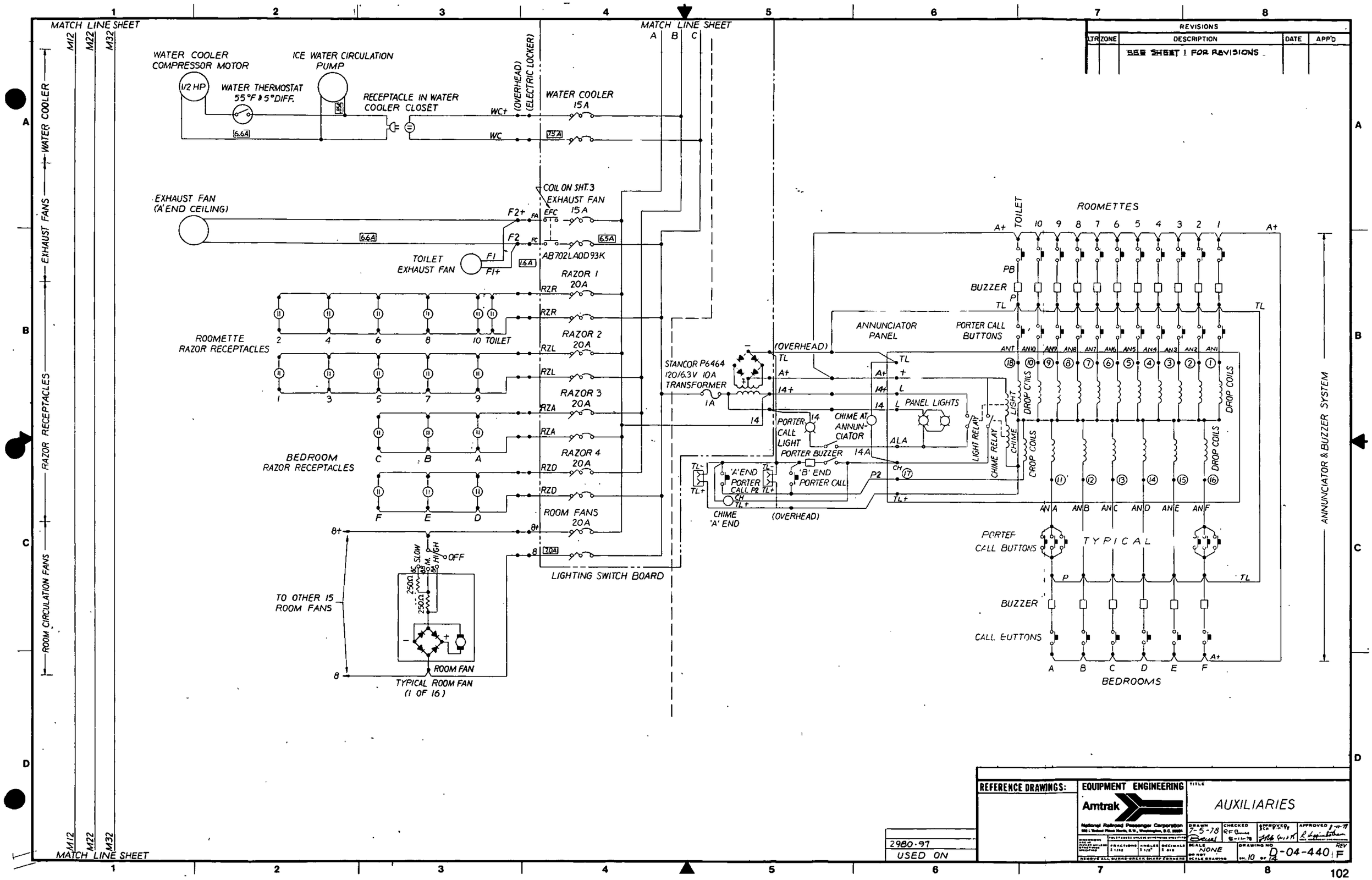

MATCH LINE SHEET
M12
M22
M32
WATER COOLER
EXHAUST FANS
RAZOR RECEPTACLES
ROOM CIRCULATION FANS
WATER COOLER COMPRESSOR MOTOR
1/2 HP
WATER THERMOSTAT 55°F & 5°DIFF.
ICE WATER CIRCULATION PUMP
RECEPTACLE IN WATER COOLER CLOSET
WC+
WC
(OVERHEAD)
(ELECTRIC LOCKER)
WATER COOLER 15A
EXHAUST FAN (A'END CEILING)
COIL ON SHT.3
EXHAUST FAN 15A
F2+
F2
F1
F1+
TOILET EXHAUST FAN
AB702LA0D93K
RAZOR 1 20A
RAZOR 2 20A
RAZOR 3 20A
RAZOR 4 20A
ROOM FANS 20A
ROOMETTE RAZOR RECEPTACLES
BEDROOM RAZOR RECEPTACLES
TOILET
LIGHTING SWITCH BOARD
TO OTHER 15 ROOM FANS
SLOW
HIGH
OFF
ROOM FAN
TYPICAL ROOM FAN (1 OF 16)
STANCOR P6464 120/6.3V 10A TRANSFORMER
ANNUNCIATOR PANEL
PORTER CALL BUTTONS
PANEL LIGHTS
PORTER CALL LIGHT
CHIME AT ANNUNCIATOR
PORTER BUZZER
'A' END PORTER CALL
'B' END PORTER CALL
CHIME 'A' END
LIGHT RELAY
CHIME RELAY
CHIME
LIGHT
DROP COILS
ROOMETTES
BUZZER
TYPICAL
PORTER CALL BUTTONS
CALL BUTTONS
BEDROOMS
ANNUNCIATOR & BUZZER SYSTEM
REVISIONS
LTR ZONE DESCRIPTION DATE APP'D
SEE SHEET 1 FOR REVISIONS
REFERENCE DRAWINGS:
EQUIPMENT ENGINEERING
Amtrak
National Railroad Passenger Corporation
TITLE
AUXILIARIES
DRAWN 7-5-78
CHECKED
APPROVED
SCALE NONE
DRAWING NO D-04-440
REV F
SH. 10 OF 14
2980-97
USED ON

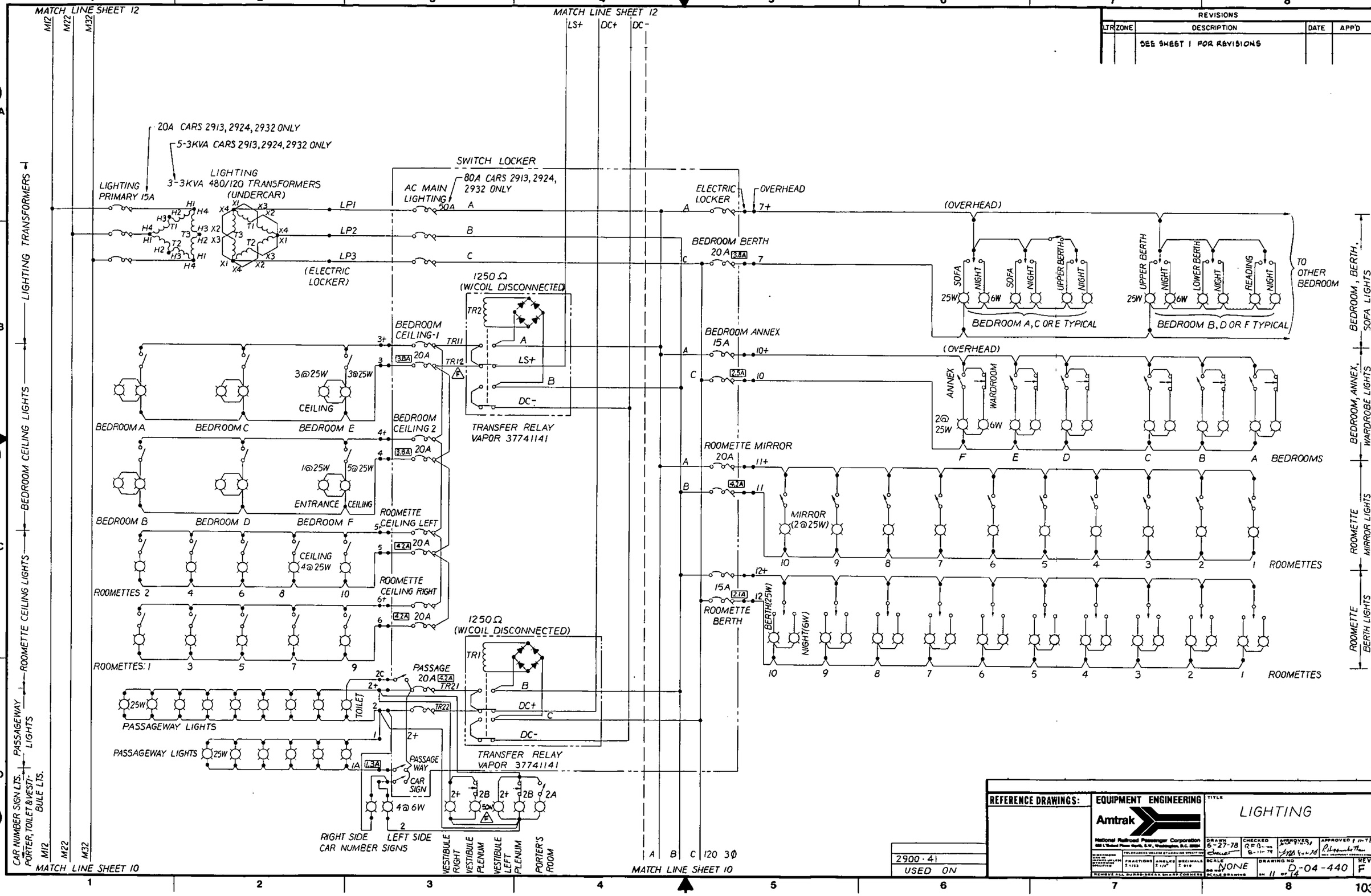

REVISIONS				
LTR	ZONE	DESCRIPTION	DATE	APP'D
		SEE SHEET 1 FOR REVISIONS		

REFERENCE DRAWINGS:

EQUIPMENT ENGINEERING
Amtrak
National Railroad Passenger Corporation

TITLE: LIGHTING

DRAWN 6-27-78 | CHECKED | APPROVED | APPROVED

SCALE NONE | DRAWING NO D-04-440 | REV F

SH 11 OF 14

2900-41
USED ON

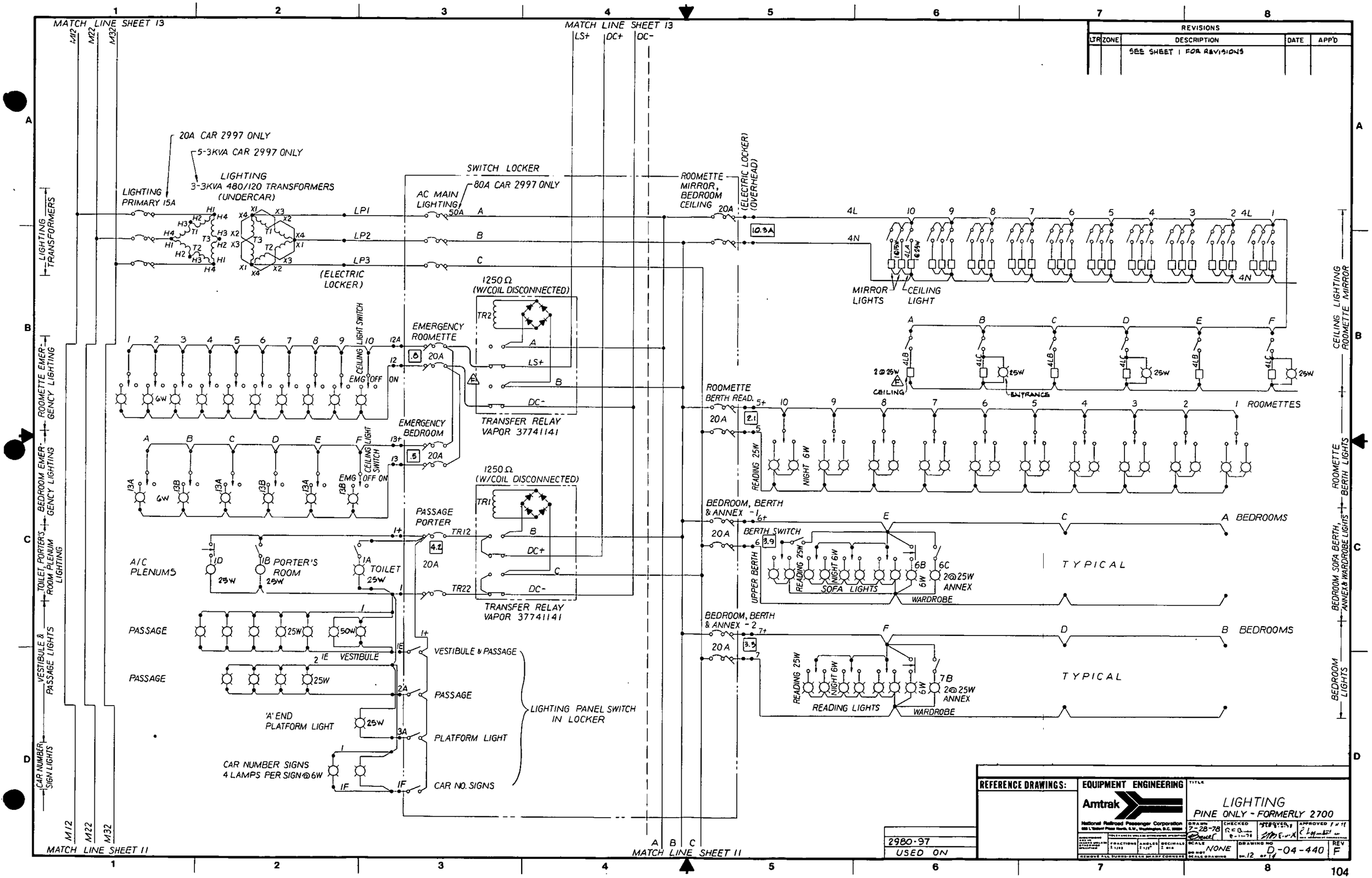

REVISIONS				
LTR	ZONE	DESCRIPTION	DATE	APP'D
		SEE SHEET 1 FOR REVISIONS		

REFERENCE DRAWINGS:

EQUIPMENT ENGINEERING

Amtrak

National Railroad Passenger Corporation

TITLE: LIGHTING PINE ONLY - FORMERLY 2700

DRAWN 7-28-78 | CHECKED | APPROVED

SCALE NONE | DRAWING NO D-04-440 | REV F

2980-97 USED ON

REVISIONS				
LTR	ZONE	DESCRIPTION	DATE	APP'D
		SEE SHEET 1 FOR REVISIONS		

MATCH LINE SHEET 14

DC- DC+

BATTERY TRAINLINE

BATTERY CHARGER

'B' END + -

'A' END + -

BATTERY TRAINLINE RECEPTACLE

BATTERY 60A — BI+ — BATTERY BOX

BATTERY 64 VOLT 80 AHr 50 CELLS NiCd

(SWITCH LOCKER) BI- (ELECTRIC LOCKER)

UPPER CONDUIT

AC1 AC2 AC3 BC3 BC1 BC2

BB+ BB- B+ NE+ B- LS+ CONDUIT DC+

BACK SIDE

1 2 3 4 TL+

LOAD SHED RELAY CIRCUIT BOARD

RELAY COIL Ω

WITH COIL DISCONNECTED

FRONT SIDE

BATTERY CHARGER CONNECTIONS

TL- TL+ (ELECTRIC LOCKER)

TRAINLINE 50A (SWITCH LOCKER) B+

B-

1A (SWITCH LOCKER) TERMINAL 4 ON LSR CIRCUIT BOARD

60A BB+ BC+ BC- DC MAIN 50A (SWITCH LOCKER)

45A 70-80 VOLTS DC CHARGE

D33 C21 1400μfd

BB-

LSR B+ NE+ DC+ LS+

CLOSED ABOVE 52 VOLTS BATTERY

(ELECTRIC LOCKER)

BATTERY CHARGER 10A

BC1 6A AC1

BC2 6A AC2

BC3 6A AC3

BATTERY CHARGER MC GRAW EDISON AM 75-50-TC

LOCKER LIGHTS 5A Z+ Z-

DOOR SWITCH

SWITCH LOCKER LIGHT

ELECTRIC LOCKER LIGHT

MARKER LIGHTS 20A 3.2A

'A' END MLA OFF MLB ML

'B' END MARKER LIGHT SWITCH (SWITCH LOCKER)

(ELECTRIC LOCKER) (OVERHEAD)

'B' END MARKER LIGHTS

ABOVE CEILING NEAR MARKER LIGHTS

'A' END MARKER LIGHTS

SET TO 35VOLTS ON LAMP WITH 75 VOLTS ON CHARGER OUTPUT

BATTERY

LOCKER LIGHTS

MARKER LIGHTS

M12 M22 M32

MATCH LINE SHEET 12

LS+ DC+ DC-

MATCH LINE SHEET 12

2900-97 USED ON

REFERENCE DRAWINGS:

EQUIPMENT ENGINEERING

Amtrak

National Railroad Passenger Corporation

TITLE: D.C. SYSTEM SCHEMATIC

DRAWN 6-9-78 Brewer | CHECKED 6-11-78 | APPROVED | APPROVED

SCALE NONE | DRAWING NO. D-04-440 | REV F

SHEET 13 OF 14

REMOVE ALL BURRS-BREAK SHARP CORNERS

'B' END (UNDER CAR)

'A' END (UNDER CAR)

TO RIGHT 27 POINT RECEPTACLE

TO LEFT 27 POINT RECEPTACLE

TO LEFT 27 POINT RECEPTACLE

TO RIGHT 27 POINT RECEPTACLE

TB - CAR BATTERY NEGATIVE
PA1 - TAPE MUSIC # 1
PA2 - TAPE MUSIC # 1
PA3 - PUBLIC ADDRESS & INTERCOM
PA4 - PUBLIC ADDRESS & INTERCOM
PA5 - PUBLIC ADDRESS CONTROL
PA6 - PUBLIC ADDRESS CONTROL
RA1 - RADIO
RA2 - RADIO
EP1 - BRAKE APPLICATION (+)
EP2 - BRAKE RELEASE (+)
EP3 - BRAKE NEGATIVE (-)
D2B - DOOR CONTROL LEFT SIDE (OPEN)
D1B - DOOR CONTROL RIGHT SIDE (OPEN)
D4B - DOOR CONTROL LEFT SIDE (CLOSE)
D3B - DOOR CONTROL RIGHT SIDE (CLOSE)
DC2B - DOOR CLOSE LIGHT (ENGINEMAN'S)
BRB - BRAKE RELEASE LIGHT (ENGINEMAN'S)
BAB - BRAKE APPLIED LIGHT (ENGINEMAN'S)
HJ - HOT JOURNAL LIGHT
CS - CONDUCTORS SIGNAL
DC1B - CONDUCTORS DOOR CLOSE LIGHT
PA7 - TAPE MUSIC #2
PA8 - TAPE MUSIC #2
BLS - CONDUCTORS DOOR CLOSE LIGHT
AN - ATTENDANT CALL

TO PIN # 2 OF DUMMY RECEPTACLE

TO PIN # 2 OF DUMMY RECEPTACLE

480 CONTROL WIRES (SEE SHEET 1)

480 CONTROL WIRES SEE SHEET 1

(SWITCH LOCKER) (ELECTRIC LOCKER)

CONDUCTORS SIGNAL ADJACENT TO SW.LKR.

CONDUCTORS SIGNAL PUSH BOTTON (INSIDE A END DOOR)

(LOWER CS TERMINAL)

CS - (UPPER 2 TERMINAL)

5A

5A

6A 800 VOLT

'B' END RELAY

'A' END RELAY

LOOP RELAY PANEL (IN SWITCH LOCKER)

DC- 64 VOLT DC+

MATCH LINE SHEET 13

27 POINT TRAINLINE CIRCUITS

CONDUCTORS SIGNAL LOOP RELAYS

NOTES:
1. SHIELDED WIRES ARE #14/2. ALL OTHERS ARE # 10.

SEE SHEET 1 FOR REVISIONS

LTR	ZONE	DESCRIPTION	DATE	APP'D
		REVISIONS		

2900-97 USED ON

REFERENCE DRAWINGS:

EQUIPMENT ENGINEERING

Amtrak

National Railroad Passenger Corporation

TITLE: TRAINLINE COMMUNICATIONS SCHEMATIC

DRAWN 6-0-78 Bruno | CHECKED R.E.D. 6-11-78 | APPROVED Ass't Supt | APPROVED Asst. Engineer

SCALE NONE | DRAWING NO. D-04-440 | REV F

SHEET 14 OF 14

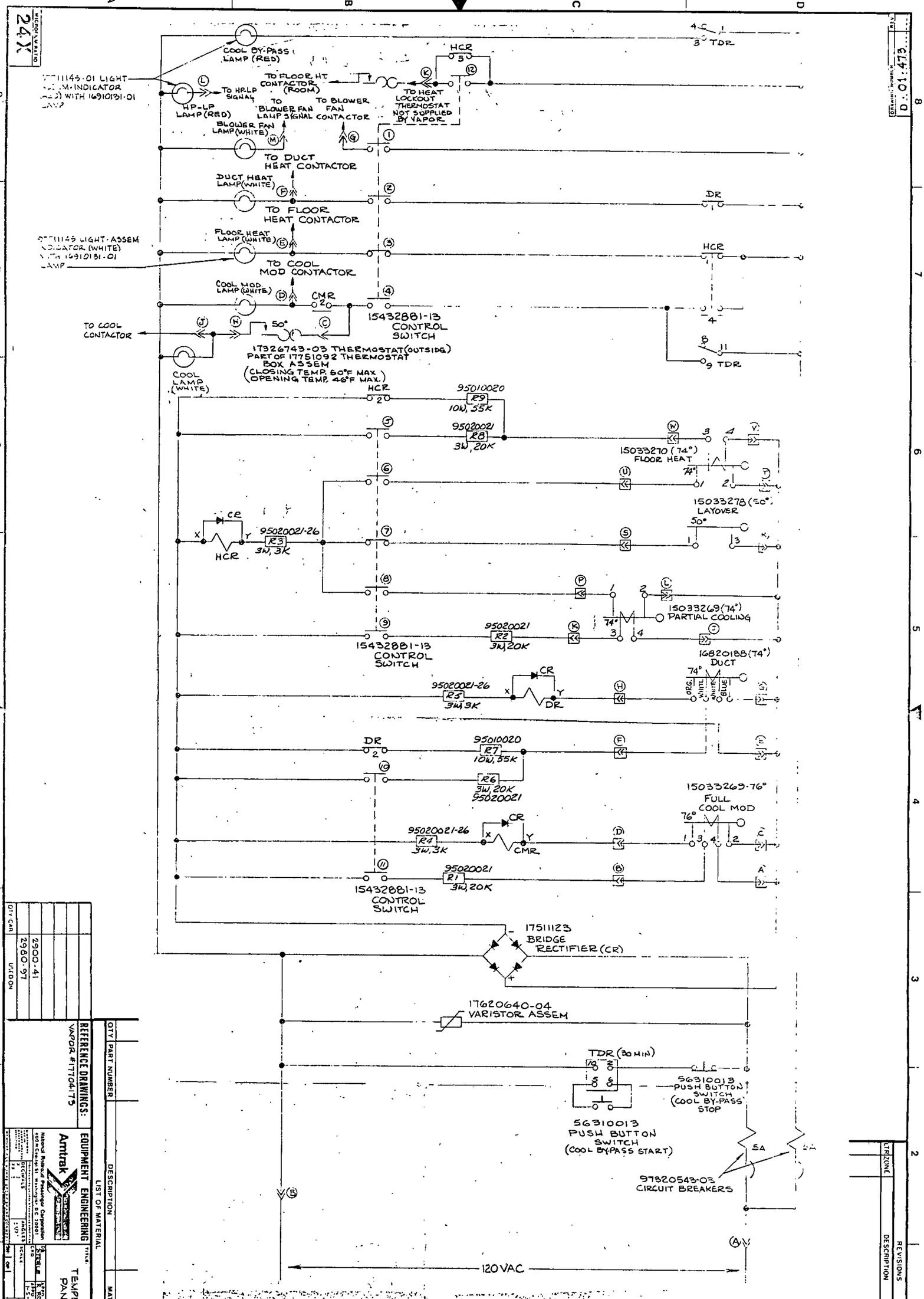

LEGEND

⊳	CONNECTOR RECEPTACLE-BAYONET FOR POWER
⊳	CONNECTOR RECEPTACLE FOR THERMOSTATS
DR	DUCT RELAY 35040176-09
TDR	TIME DELAY RELAY 97411034-03
CMR	COOL MOD. RELAY 35040175-17
HCR	HEAT COOL RELAY 35040180-09
CR	RECTIFIER ASSEMBLY 97510339

15432882-21 CONTROL SWITCH

CIRCUITS CLOSED

	POSITION		1	2	3	4	5	6	7	8	9	10	11	12
COOL	DAY	L2	●			●				●	●		●	
	NIGHT	L1	●			●				●				
	OFF-LAYOVER	C			●				●					
HEAT	NIGHT	R1	●	●	●			●						●
	DAY	R2	●	●	●		●	●				●		●

REFERENCE DRAWINGS: VAPOR #17704173

EQUIPMENT ENGINEERING

Amtrak

TEMPERATURE CONTROL PANEL SCHEMATIC

D-01-473

D-01-473

24X

REVISIONS

LTR | ZONE | DESCRIPTION | DATE | APP'D

QTY | PART NUMBER | DESCRIPTION | MATERIAL | MFG/SPEC | ITEM

LIST OF MATERIAL

2900-41

2980-97

QTY CAR | USED ON

107

E-00 474

LTR	ZONE	DESCRIPTION	DATE	APPVD

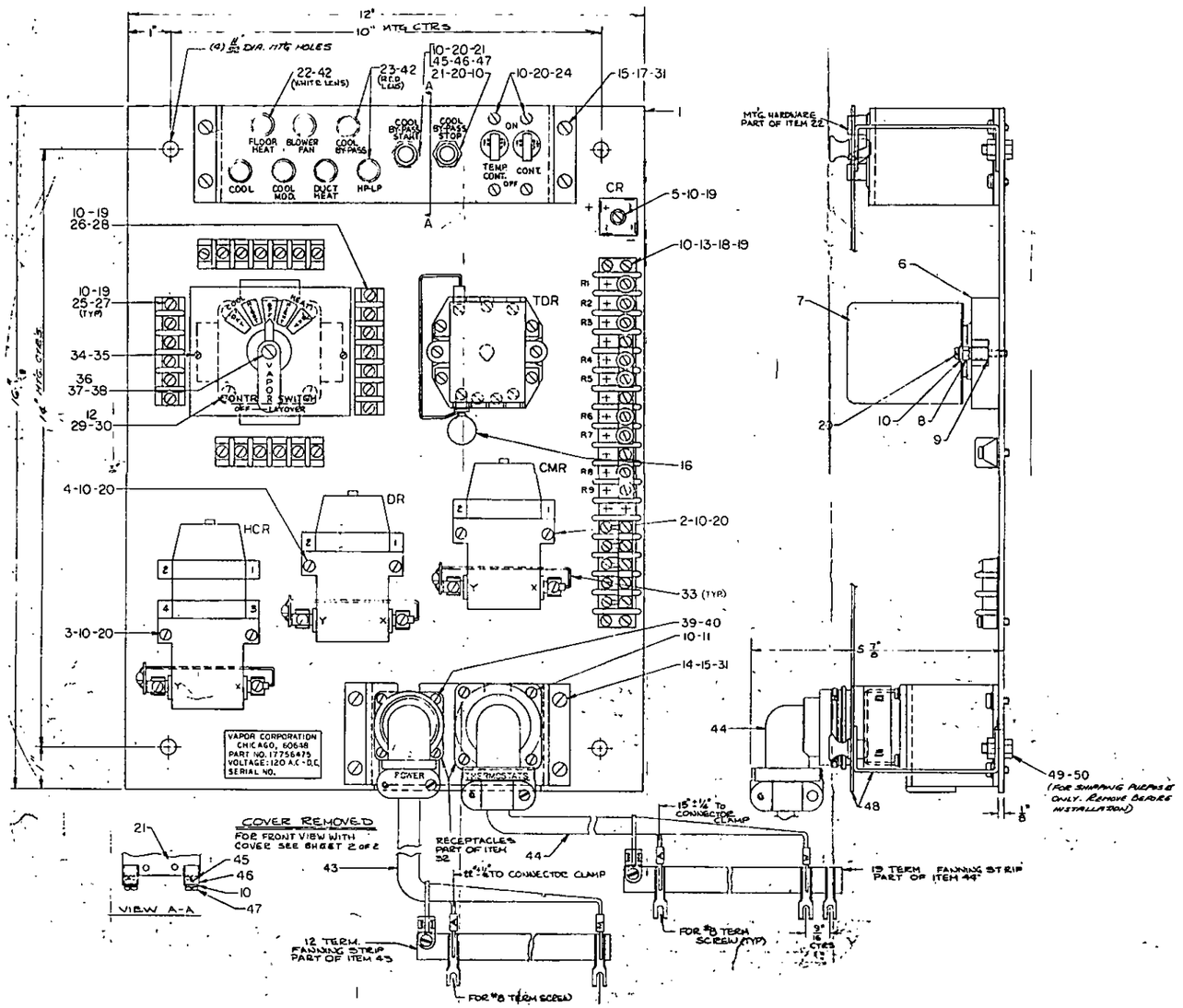

ITEM	PART NO.	DESCRIPTION	QTY.	REMARKS
1	17731065	PLATE - MOUNTING	1	
2	350A0175-17	RELAY - PILOT (CMR)	1	
3	350A0180-09	RELAY - PILOT (HCR)	1	
4	350A0176-09	RELAY - PILOT (DR)	1	
5	17531123	RECTIFIER - BRIDGE (DR)	1	
6	57319790	SOCKET - RELAY	1	
7	97A11034-03	RELAY - TIME DELAY (HYBRID) (TDR)	1	
8	57A10305-03	POST - HEX	2	
9	1106	LOCKWASHER (EXT.) (CODE 528)	2	SEE NOTE #1
10	615/16"OD X .028"TK)	FLATWASHER	85	SEE NOTE #1
11	#6-32 X 3/8" LG.	SCREW PAN HD. SEMS (EXT.)	4	SEE NOTE #1
12	15432881-21	SWITCH - CONTROL	1	
13	17731068	TERMINAL STRIP ASSEMBLY	1	
14	17731066	BRACKET - MOUNTING (CONNECTORS)	1	
15	#8-32 X 3/8" LG.	SCREW PAN HD. SEMS (EXT.)	8	SEE NOTE #1
16	17622640-04	VARISTOR ASSEMBLY	1	
17	17721146	BRACKET - MOUNTING	1	
18	97212571	INSULATOR STRIP	1	
19	#8-32 X 5/8" LG.	SCREW PAN HD. SEMS (EXT.)	13	SEE NOTE #1
20	#6-32 X 5/16" LG.	SCREW PAN HD. SEMS (EXT.)	14	SEE NOTE #1
21	54310018	SWITCH-SNAP ACTION	2	
22	97711143	LIGHT ASSEM.-IND. (WHITE)	5	
23	97711145-01	LIGHT ASSEM.-IND. (RED)	2	
24	97320543-03	CIRCUIT BREAKER (5 AMP)	2	
25	96910012-02	STRIP - TERMINAL	2	
26	96910012-03	STRIP - TERMINAL	2	
27	97110025-07	STRIP - INSULATOR	2	
28	97110025-08	STRIP - INSULATOR	2	
29	#10-32 X 5/16"LG.	SCREW PAN HD. SEMS (EXT.)	8	SEE NOTE #1
30	#10(7/16"OD X .032"TK)	FLATWASHER	8	SEE NOTE #2
31	#8(5/8"OD X .032"TK)	FLATWASHER	8	SEE NOTE #1
32	17731070	HARNESS - WIRING	1	
33	97510039	RECTIFIER ASSEMBLY	3	
34	17711069	INDICATING PLATE(CONTROL SWITCH)	1	
35	#4 X 3/16" LG.	SCREW - SELF TAPPING (TYPE B)	2	SEE NOTE #1
36	15010965	KNOB - SWITCH (7100-D-1)	11	E-10559
37	#8-32 X 3/4" LG.	SCREW HD. HD.	1	SEE NOTE #1
38	#8	WASHER - SPLIT TYPE	15	SEE NOTE #1
39	9-40 X 3/8" LG.	SCREW PAN HD. SEMS (EXT.)	4	SEE NOTE #1
40	4(7/8"OD X .028"TK)	FLATWASHER	4	SEE NOTE #1
41				
42	16910151-01	LAMP-NEON (NE-20)	17	
43	17731094	CONNECTOR & STRIP ASSEMBLY	1	
44	17731096	CONNECTOR & STRIP ASSEMBLY	1	
45	87411176	SPACER	2	
46	96328010-33	INSULATOR	2	
47	6-32 X 3/4" LG.	SCREW-PAN HD (SEMS) EXT.	2	
48	17731169	COVER & BRACKET ASSEM.	1	
49	1/4-20 X 1 1/2" LG.	SCREW - HEX HD.	4	SEE NOTE 1
50	1/4-20	NUT - HEX	4	SEE NOTE 1

NOTE:
1. STEEL, CADMIUM PLATE COMMERCIAL FINISH.
2. TERMINAL LUG FASTENERS MUST BE IN ACCORDANCE WITH BRAYMISS 67101001 THRU 67101005 WHICHEVER APPLIES.
3. PANEL, MATERIAL: 12 GA. STEEL
   FINISH: WHITE GLOSS ENAMEL PAINT WITH BLACK SILK SCREEN LETTERING.
4. VAPOR TEST PROCEDURE 755-84-0829
5. SCHEM. WIRE DIA 17704175

QTY	PART NUMBER	DESCRIPTION	MATERIAL	MFG/SPEC	P/L ITEM NO	ITEM

LIST OF MATERIAL

REFERENCE DRAWINGS	EQUIPMENT ENGINEERING	TITLE
VAPOR 17756476 SH. 1 OF 2	Amtrak	TEMPERATURE CONTROL PANEL

QTY/CAR	USED ON
8900-41	
8980-97	

SHEET E-00 474

MICROFILM RATIO 30 X

108-1

E-00 474

REVISIONS				
LTR	ZONE	DESCRIPTION	DATE	APPVD

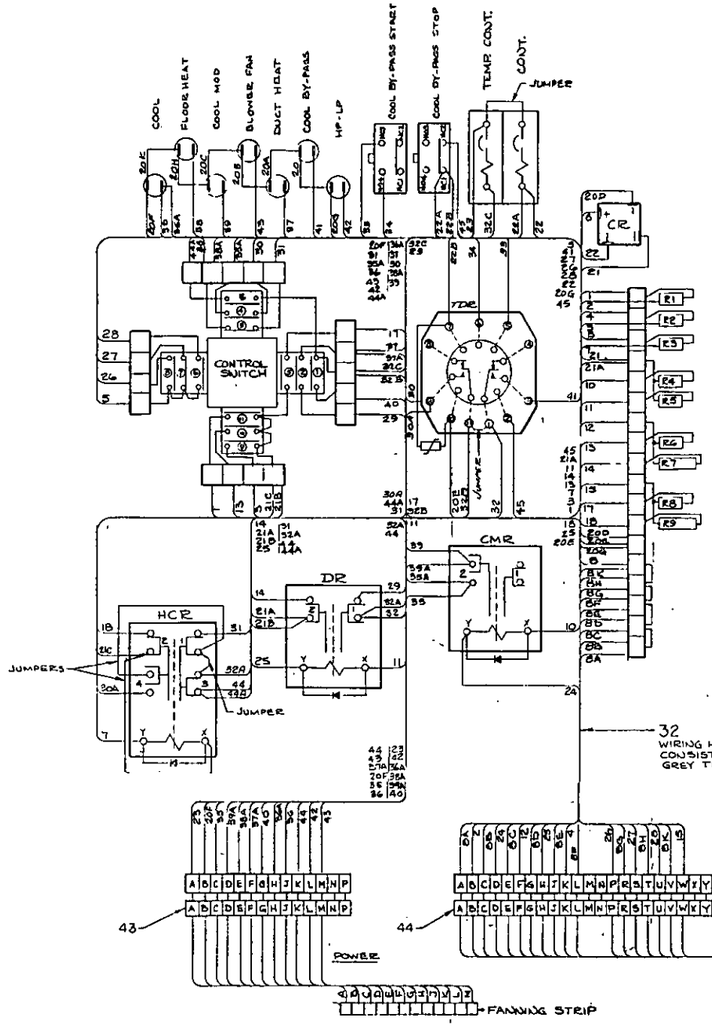

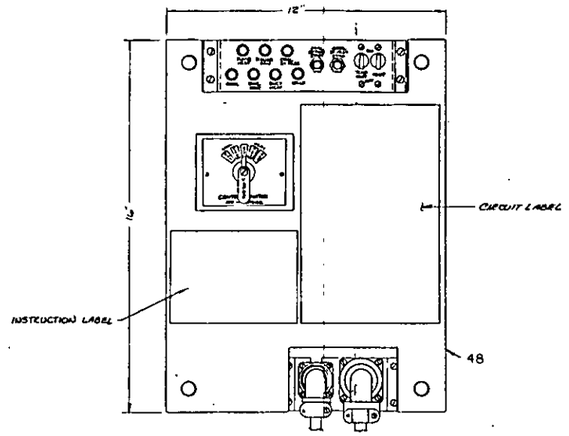

FRONT VIEW WITH COVER

QTY	PART NUMBER	DESCRIPTION	MATERIAL	MFG/SPEC	PA ITEM NO	ITEM

LIST OF MATERIAL

REFERENCE DRAWINGS
VAPOR P/N 796475
SH. 2 OF 2

1900-41
1900-97

QTY/CAR | USED ON

EQUIPMENT ENGINEERING
Amtrak

TITLE
TEMPERATURE CONTROL PANEL

SIZE E | E-00-474

MICROFILM RATIO
30 X

ELECTRICAL SCHEMATICS HERITAGE FLEET
SERIES 39902 - 39975

	DRAWING NO.	TITLES/DESCRIPTION
1	R-04-1011	Electric Locker Wiring Diagram Coach/Dorm 39902-39911
2	R-04-1012	Electric Locker Wiring Diagram Coach/Dorm 39912-39923 39925-39936
3	R-01-1013	Heat Wiring Schematic Coach/Dorm 39902-39936
4	R-01-1025	Temperature Control Schematic Coach/Dorm 39902-39938
5	R-04-1027	Wiring Diagram Switch Locker Coach/Dorm 39925-39936 39912-39923
6	R-04-1087	Wiring Diagram Switch Locker Coach/Dorm 39902-39911
7	R-01-1155	Heat Wiring Schematic Coach Dorm 39900, 39901, 39937, 39938 39902-39936
8	R-01-1158	Temperature Control Schematic Ogontz Coach Dorm 39900-39901
9	R-04-1165	Wiring Diagram Switch Locker Coach Dorm 39900-39901
10	R-01-1024	Temperature Control Schematic Coach 39940-39964
11	R-04-1026	Wiring Diagram Switch Locker Coach 39940-39964
12	R-04-1036	Electric Locker Wiring Diagram Coach 39940-39964
13	R-01-1038	Heat Wiring Schematic Coach 39940-39964
14	R-01-1157	Temperature Control Schematic Ogontz Coach 39940-39964
15	R-04-1046	Electric Locker Wiring Diagram Lounge 39970-39975
16	R-01-1065	Temperature Control Schematic Lounge 39970-39972, 39975
17	R-04-1067 (1)	Switch Locker Wiring Diagram Lounge 39970-39972, 39975
18	R-0401067 (2)	Switch Locker Wiring Diagram Lounge 39973, 39974
19	R-04-1121	Food Service Equipment Conduit and Wiring Lounge 39970-39975
20	R-01-1139	Temperature Control Panel Schematic Ogontz 39973-39974 39900-39901
21	R-01-1159	Temperature Control Schematic Ogontz Lounge 39973, 39974
22	R-01-1178	Temperature Control Panel Schematic Lounge 39970-39972, 39975

*For additional copies of this collection of schematics contact:
Supervisor Support Systems, Amtrak Technical Training Center
202 Garstang Street, Beech Grove, Indiana 46107
317/263-0465

For single diagram copies contact:
Operation and Maintenance Department
National Railroad Passenger Corporation
400 North Capitol St., N.W.
Washington, D.C. 20001
202/733-2694

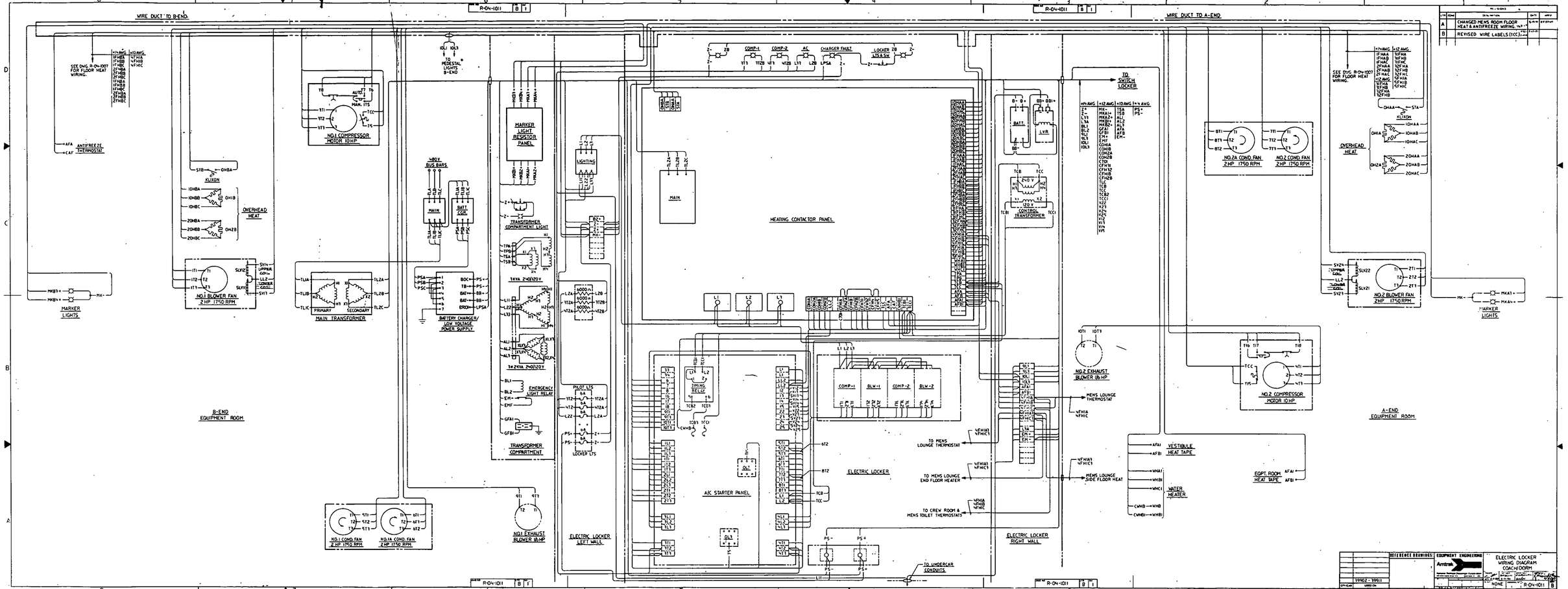
WIRE DUCT TO B-END
WIRE DUCT TO A-END
SEE DWG. R-04-1007 FOR FLOOR HEAT WIRING.
ANTIFREEZE THERMOSTAT
MARKER LIGHTS
NO.1 BLOWER FAN 2 HP 1750 RPM
OVERHEAD HEAT
KLIXON
NO.1 COMPRESSOR MOTOR 10 HP
MAN. ITS
MAIN TRANSFORMER
PRIMARY
SECONDARY
480Y BUS BARS
MAIN
BATT. CONT.
BATTERY CHARGER/ LOW VOLTAGE POWER SUPPLY
MARKER LIGHT RESISTOR PANEL
LIGHTING
TRANSFORMER COMPARTMENT LIGHT
3 KVA 240/120 V.
1 ø 2 KVA 240/120 V.
TRANSFORMER COMPARTMENT
EMERGENCY LIGHT RELAY
PILOT LTS
LOCKER LTS
NO.1 EXHAUST BLOWER 10 HP
NO.1 COND. FAN 2 HP 1750 RPM
NO.1A COND. FAN 2 HP 1750 RPM
ELECTRIC LOCKER LEFT WALL
B-END EQUIPMENT ROOM
TO PEDESTAL LIGHTS B-END
TO SWITCH LOCKER
HEATING CONTACTOR PANEL
MAIN
BATT.
LVR
CONTROL TRANSFORMER
240 V
120 V
TIMING RELAY
A/C STARTER PANEL
ELECTRIC LOCKER
COMP-1
BLW-1
COMP-2
BLW-2
TO MENS LOUNGE THERMOSTAT
TO MENS LOUNGE END FLOOR HEATER
TO CREW ROOM & MENS TOILET THERMOSTATS
TO MENS LOUNGE SIDE FLOOR HEAT
TO UNDERCAR CONDUITS
ELECTRIC LOCKER RIGHT WALL
NO.2 EXHAUST BLOWER 10 HP
NO.2A COND. FAN 2 HP 1750 RPM
NO.2 COND. FAN 2 HP 1750 RPM
NO.2 BLOWER FAN 2 HP 1750 RPM
NO.2 COMPRESSOR MOTOR 10 HP
VESTIBULE HEAT TAPE
WATER HEATER
EQPT. ROOM HEAT TAPE
A-END EQUIPMENT ROOM
REVISIONS
A CHANGED MENS ROOM FLOOR HEAT & ANTIFREEZE WIRING. 11-29-71
B REVISED WIRE LABELS (TCC). 6-21-72
REFERENCE DRAWINGS
EQUIPMENT ENGINEERING
Amtrak
ELECTRIC LOCKER WIRING DIAGRAM COACH/DORM
SCALE NONE
R-04-1011 B 1

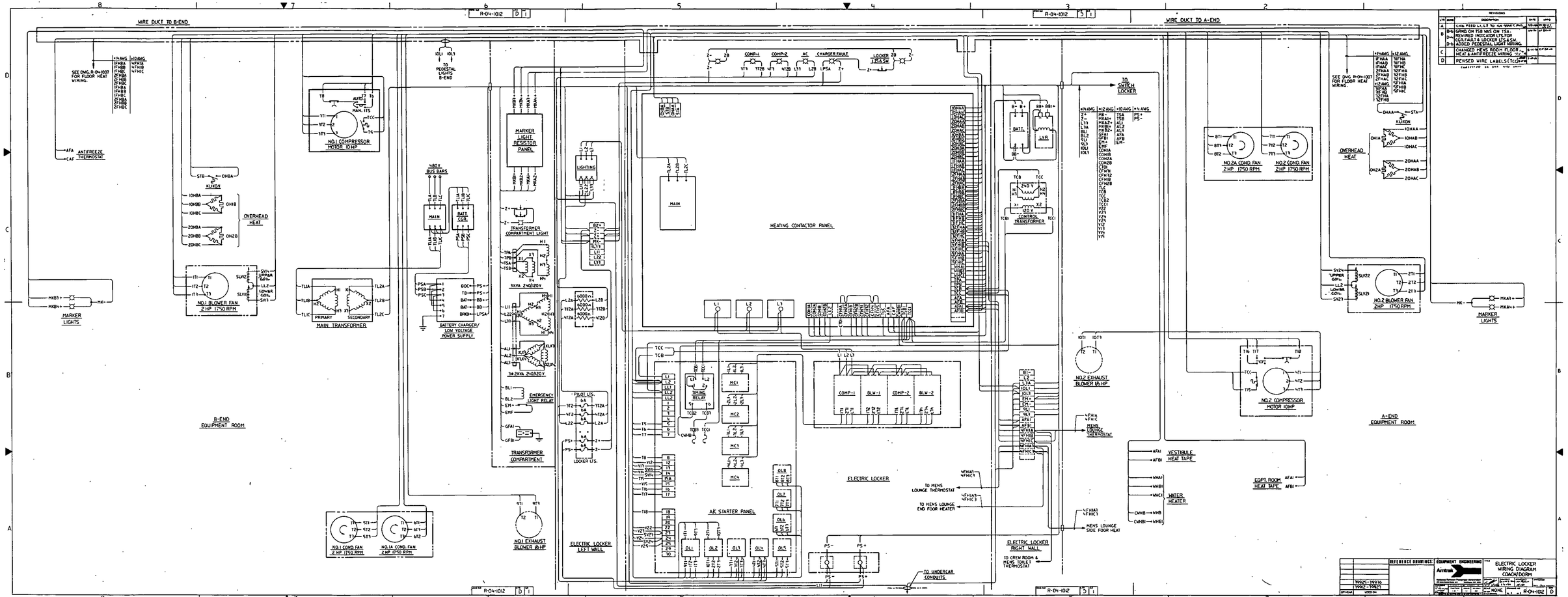
WIRE DUCT TO B-END
WIRE DUCT TO A-END
R-04-1012 D 1
R-04-1012 D 1
R-04-1012 D 1
R-04-1012 D 1
SEE DWG. R-04-1007 FOR FLOOR HEAT WIRING.
AFA ANTIFREEZE THERMOSTAT
CAF
MARKER LIGHTS
MKB1+
MKB1-
MK-
MK+
NO.1 BLOWER FAN 2 HP 1750 RPM
OVERHEAD HEAT
KLIXON
STB
OHBA
OHBB
OHBC
OHIB
OHIA
ZOHBA
ZOHBB
ZOHBC
ZOHB
ZOHA
SVIN LOWER COMP.
SVIN
SLVIX
SLVIX2
LL2
COMBA
SVI1
NO.1 COMPRESSOR MOTOR 10HP
T8
T7
T6
AUTO
MAN.
TCC
TU
T1
T2
T3
T4
T5
MAIN TRANSFORMER
PRIMARY
SECONDARY
TL1A
TL1B
TL1C
TL2A
TL2B
TL2C
H1
H2
H3
X1
X2
X3
X4
W.B.V. BUS BARS
MAIN
BATT. CGR.
PSA
PSB
PSC
BATTERY CHARGER/ LOW VOLTAGE POWER SUPPLY
BOC
TB
BA
BB
BNG
LPSA
PS+
PS-
MARKER LIGHT RESISTOR PANEL
HRB1
HRB2
HRA1
HRA2
HRA3
HRA4
TRANSFORMER COMPARTMENT LIGHT
TP4
TP3
TS4
TS3
3KVA 240/120V
LIGHTING
LT1
LT2
LT3
LIGHTING CONTACTOR
LIGHTING TRANSFORMER
LIGHTING CIRCUIT BREAKER
LIGHTING CONTACTOR
MKA
LL1
LL2
LLT1
LLT2
3 ø 2KVA 240/120V
EMERGENCY LIGHT RELAY
BL1
BL2
EM-
EMF
GFAI
GFBI
TRANSFORMER COMPARTMENT
PILOT LTS.
LOWER LTS.
L2A
L1A
L2B
L1B
ELECTRIC LOCKER LEFT WALL
NO.1 EXHAUST BLOWER 10HP
NO.1A COND. FAN 2 HP 1750 RPM
NO.1 COND. FAN 2 HP 1750 RPM
TO PEDESTAL LIGHTS B-END
IOL1
IOL3
HEATING CONTACTOR PANEL
MAIN
L1
L2
L3
COMP-1
BLW-1
COMP-2
BLW-2
AC CHARGER FAULT
LOCKER 2B
LOCKER 1B
L2B
L1B
L1T3
L1T2B
L1T3
L1T2B
L33
L2B
LPSA
Z+
Z-
TCC
TCB
TIMING RELAY
TC82
TC81
CWHB
TC61
MC1
MC2
MC3
MC4
AC STARTER PANEL
OL1
OL2
OL3
OLN
OL5
OLB
OL7
OL6
ELECTRIC LOCKER
TO MENS LOUNGE THERMOSTAT
TO MENS LOUNGE END FOOR HEATER
WFHIA3
WFHIC3
WFHEAT
WFHIC1
MENS LOUNGE SIDE FLOOR HEAT
WFHIA1
WFHIC1
ELECTRIC LOCKER RIGHT WALL
TO CREW ROOM & MENS TOILET THERMOSTAT
TO UNDERCAR CONDUITS
TO SWITCH LOCKER
B+
B-
BB+
BB-
BATT.
LVR
CONTROL TRANSFORMER
120 V
2HO V
NO.2 EXHAUST BLOWER 1/6 HP
IOT1
IOT3
T1
T2
NO.2A COND. FAN 2 HP 1750 RPM
NO.2 COND. FAN 2 HP 1750 RPM
BT1
BT2
BT3
T11
T12
T13
OHIA
OHIB
OHIC
OH2A
OH2B
OH2C
10HAA
10HAB
10HAC
ZOHAA
ZOHAB
ZOHAC
STA
NO.2 BLOWER FAN 2HP 1750 RPM
SVZ1
SVZ2
SVZ1N
SVZ2N
LL2
COMBA
COMB
NO.2 COMPRESSOR MOTOR 10HP
T16
T17
T18
T15
A-END EQUIPMENT ROOM
VESTIBULE HEAT TAPE
AFAI
AFBI
WATER HEATER
WHA1
WHB1
WHC1
CWHB
EQPT. ROOM HEAT TAPE
B-END EQUIPMENT ROOM
REVISIONS
LTR ZONE DESCRIPTION DATE APPD
A CHG. FEED L1, L2 TO AIR CONDITIONER 1-25-68
B D-A GRND ON TSB WAS ON TSA; REVIRED INDICATOR LTS FOR CGR FAULT & LOCKER LTS & SW. ADDED PEDESTAL LIGHT WIRING. 5-11-68
C CHANGED MENS ROOM FLOOR HEAT & ANTIFREEZE WIRING 7-29-68
D REVISED WIRE LABELS (TCO) 7-29-68
CONFORMED AS BUILT WIRE LIST
REFERENCE DRAWINGS
9952L - 9991G
9992 - 9992L
EQUIPMENT ENGINEERING
Amtrak
ELECTRIC LOCKER WIRING DIAGRAM COACH/DORM
SCALE NONE
R-04-1012 D
2

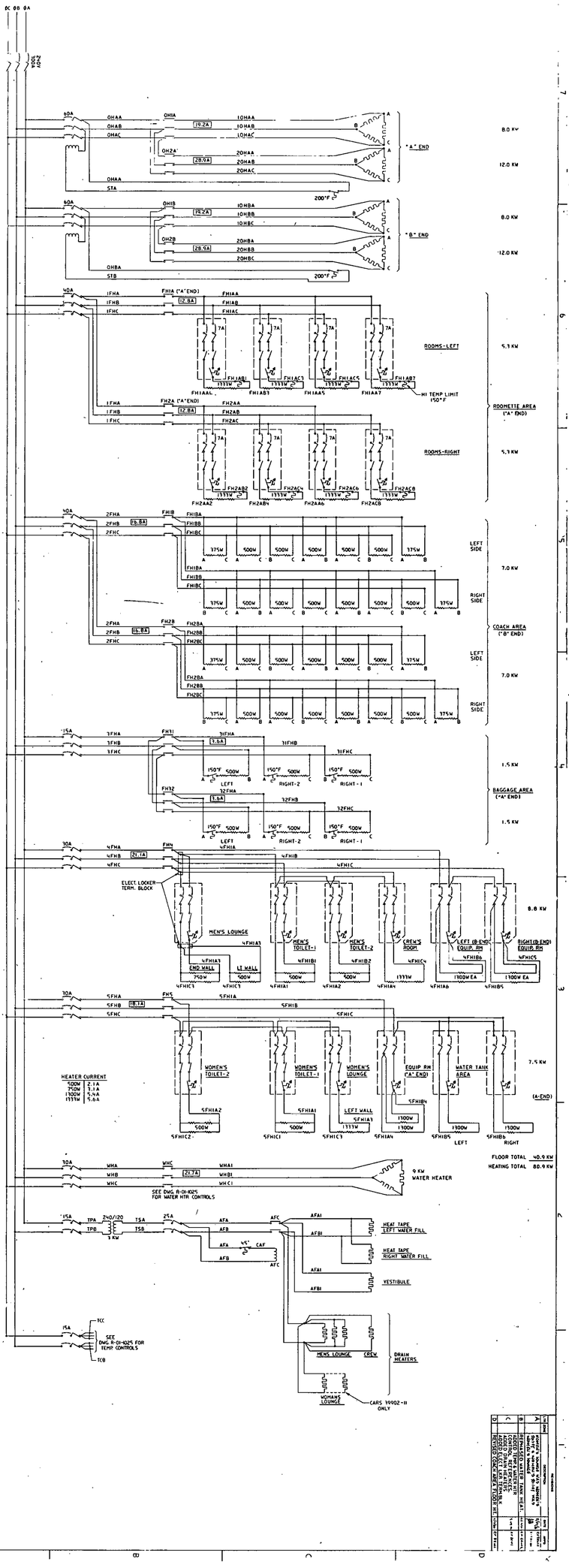

NO.	DESCRIPTION	DATE	APPD
D	REVISED ON-OFF HEATER PANEL	11-14-91	
C	ADDED ELEC LEAD TERMINAL K	11-14-91	
B	CONTROL REFERENCES	11-14-91	
A	REPHASED WATER TANK HEATERS	11-14-91	

DRAWN	
CHECKED	
ENGINEER	
APPROVED	
DATE	11-14-91

ACF INDUSTRIES, INCORPORATED
750 THIRD AVENUE, NEW YORK, N.Y. 10017

ACF INDUSTRIES, INCORPORATED
ENGINEERING

HEAT WIRING
8 ROOM/1 DOUBLE BEDROOM
LOUNGE/GALLEY/LOUNGE

SCALE	1" = 1'-0"
DRAWING NO.	R-01-1011
SHEET NO.	D

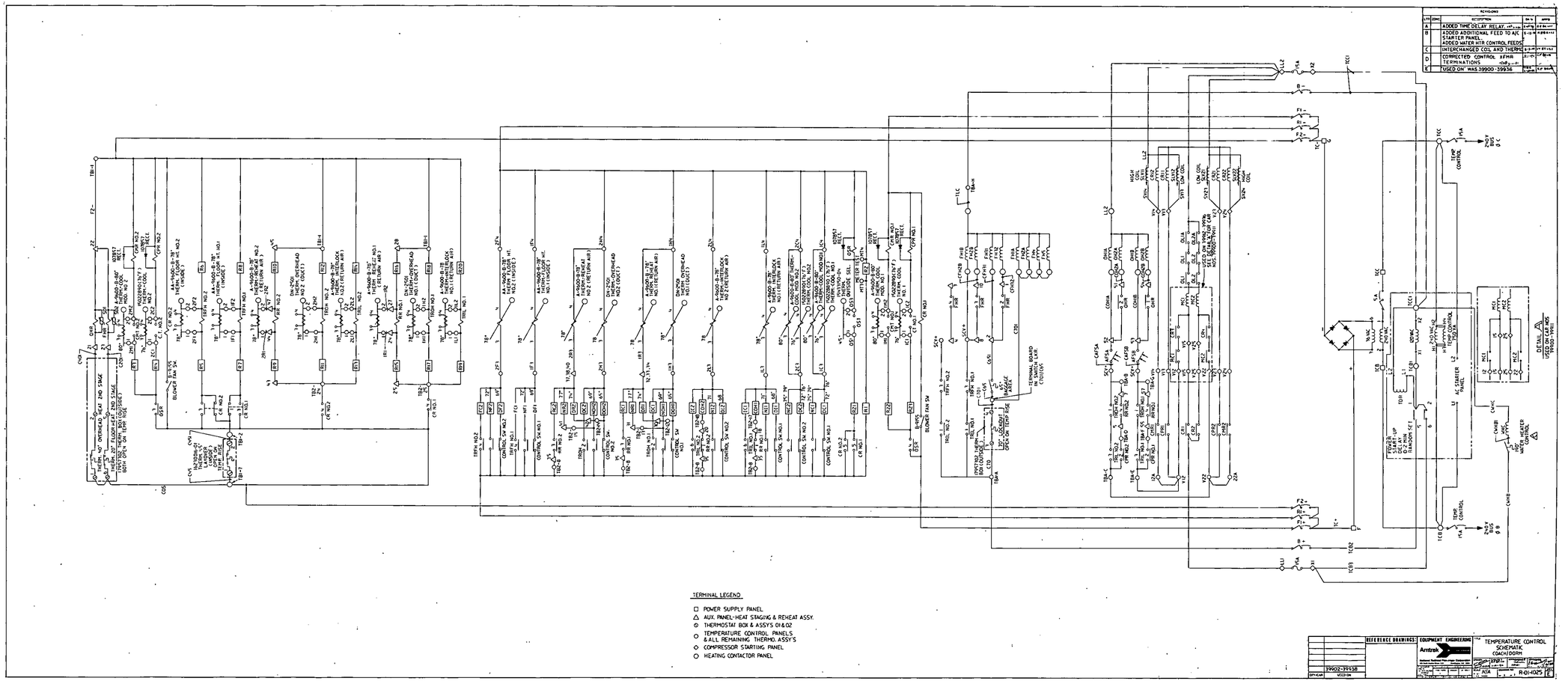
REVISIONS
A ADDED TIME DELAY RELAY
B ADDED ADDITIONAL FEED TO A/C STARTER PANEL. ADDED WATER HTR CONTROL FEEDS
C INTERCHANGED COIL AND THERMO
D CORRECTED CONTROL XFMR TERMINATIONS
E USED ON WAS 39900-39936
TERMINAL LEGEND
POWER SUPPLY PANEL
AUX. PANEL-HEAT STAGING & REHEAT ASSY.
THERMOSTAT BOX & ASSYS 01&02
TEMPERATURE CONTROL PANELS & ALL REMAINING THERMO. ASSY'S
COMPRESSOR STARTING PANEL
HEATING CONTACTOR PANEL
REFERENCE DRAWINGS
EQUIPMENT ENGINEERING
Amtrak
TEMPERATURE CONTROL SCHEMATIC COACH/DORM
39902-39938
R-01-1025
DETAIL A USED ON CAR NOS 39900-39911

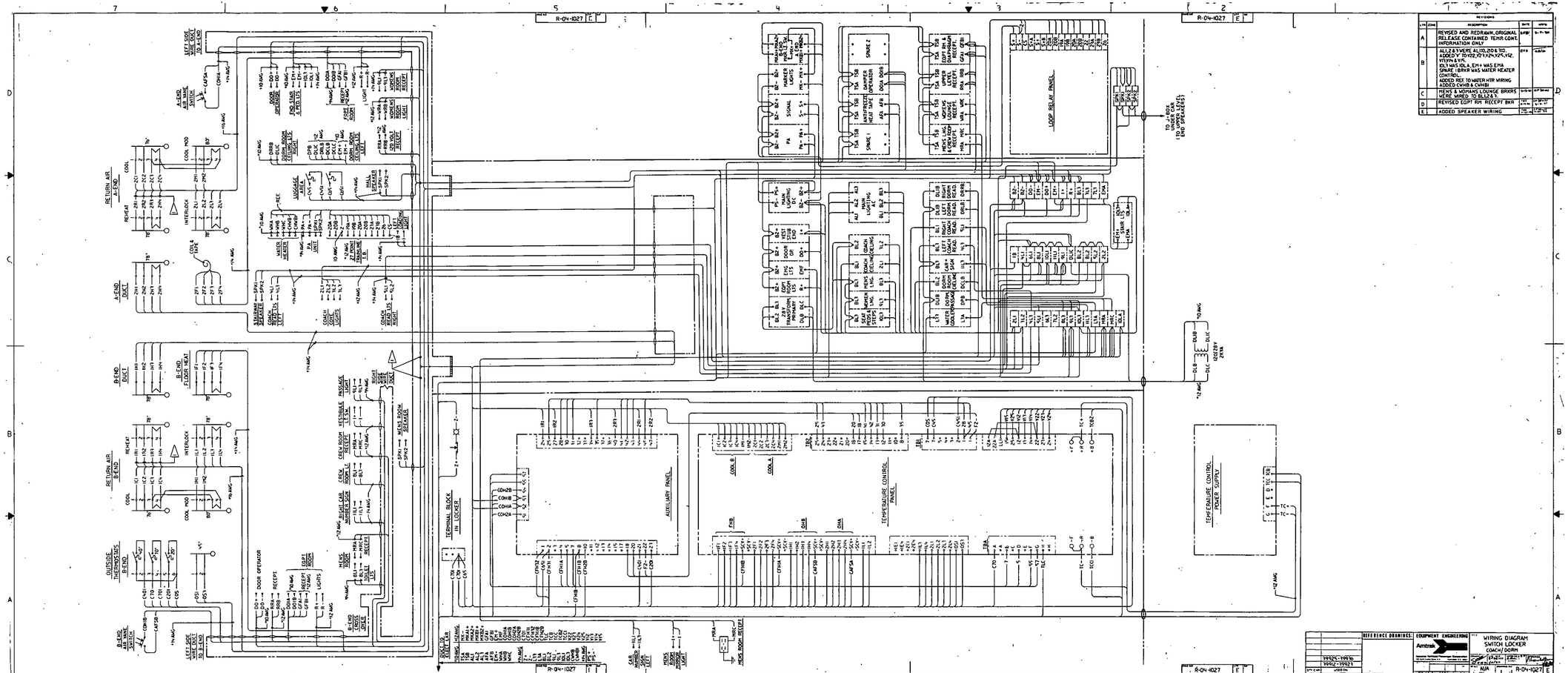

R-04-1027
LOOP RELAY PANEL
AUXILIARY PANEL
TEMPERATURE CONTROL PANEL
TEMPERATURE CONTROL POWER SUPPLY
TERMINAL BLOCK IN LOCKER
RETURN AIR A-END
RETURN AIR B-END
OUTSIDE THERMOSTATS B-END
A-END DUCT
B-END DUCT
B-END FLOOR HEAT
LEFT SIDE WIRE DUCT TO A-END
LEFT SIDE WIRE DUCT TO B-END
MEN'S ROOM SPEAKER
MEN'S ROOM MIRROR LIGHT
MEN'S ROOM RECEPT
TO J-BOX UNDER CAR TO UPPER LEVEL (TO SPEAKERS)
REVISIONS
A REVISED AND REDRAWN, ORIGINAL RELEASE CONTAINED TEMP. CONT. INFORMATION ONLY
B ALL 2 & 3 WERE ALL 10, 20 & 30. ADDED "Y" TO Y22, Y23, Y24, Y25, Y12, Y13, Y14 & Y15. 10L3 WAS 10L4, EM4 WAS EM4. SPARE 1 BRKR WAS WATER HEATER CONTROL. ADDED REF. TO WATER HTR WIRING. ADDED CWHB & CWHBI
C MEN'S & WOMAN'S LOUNGE BRKRS WERE MIRED TO BLL2 & 3.
D REVISED EQPT RM RECEPT BKR
E ADDED SPEAKER WIRING
REFERENCE DRAWINGS:
EQUIPMENT ENGINEERING
Amtrak
WIRING DIAGRAM SWITCH LOCKER COACH/DORM
19925-19936
19912-19921
SCALE NONE
N/A
R-04-1027

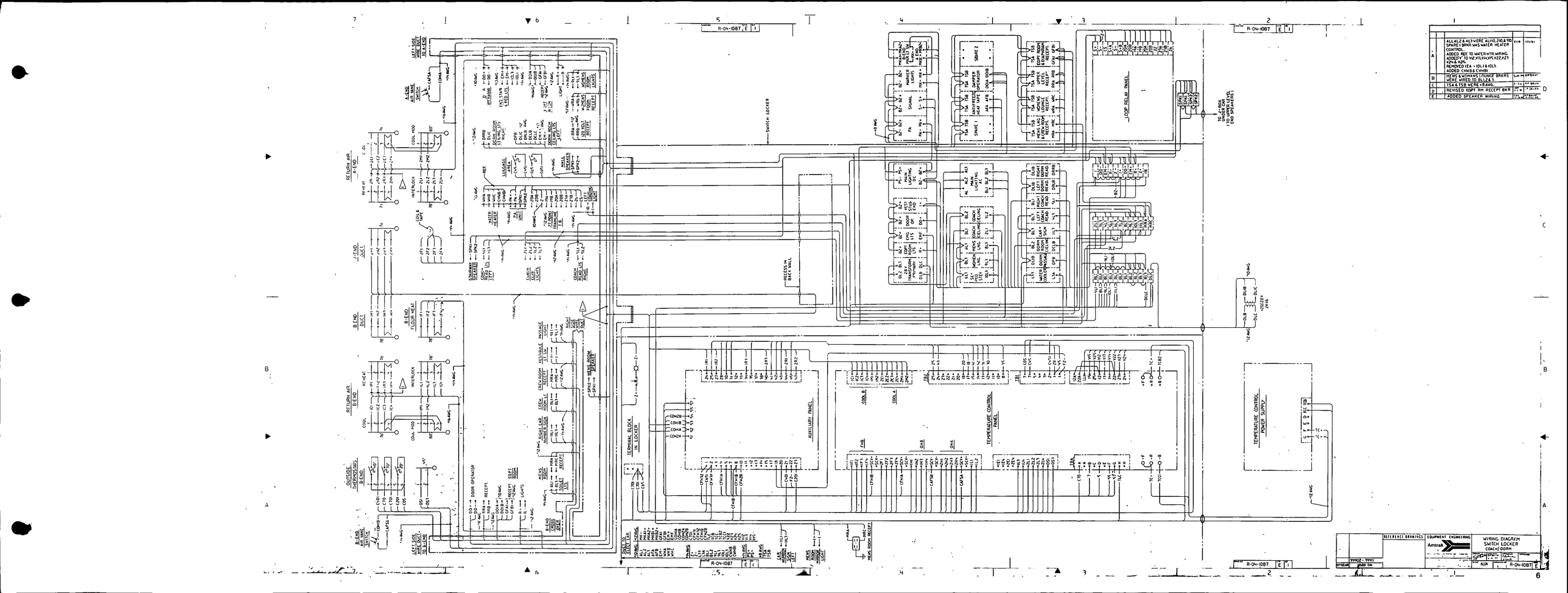
R-04-1087, E 1
SWITCH LOCKER
LOOP RELAY PANEL
AUXILIARY PANEL
TEMPERATURE CONTROL PANEL
TEMPERATURE CONTROL POWER SUPPLY
TERMINAL BLOCK IN LOCKER
A-END AIR MANIFOLD
B-END AIR MANIFOLD
RETURN AIR A-END
RETURN AIR B-END
A-END DUCT
B-END DUCT
A-END FLOOR HEAT
B-END FLOOR HEAT
OUTSIDE THERMOSTAT B-END
DOOR OPERATOR
SMOKE ALARM SPEAKER
WATER HEATER
LUGGAGE RACK
WALL SPEAKER
BRAKE SIGNAL
MARKER LIGHTS
SIGNAL
PA
AMPLIFIER
DAMPER MOTOR
SPARE 1
SPARE 2
MAIN LIGHTING DC
LIGHTING
DOOR CTRL
HEAT CONTROL
HEAT CONTROL
HEAT CONTRO

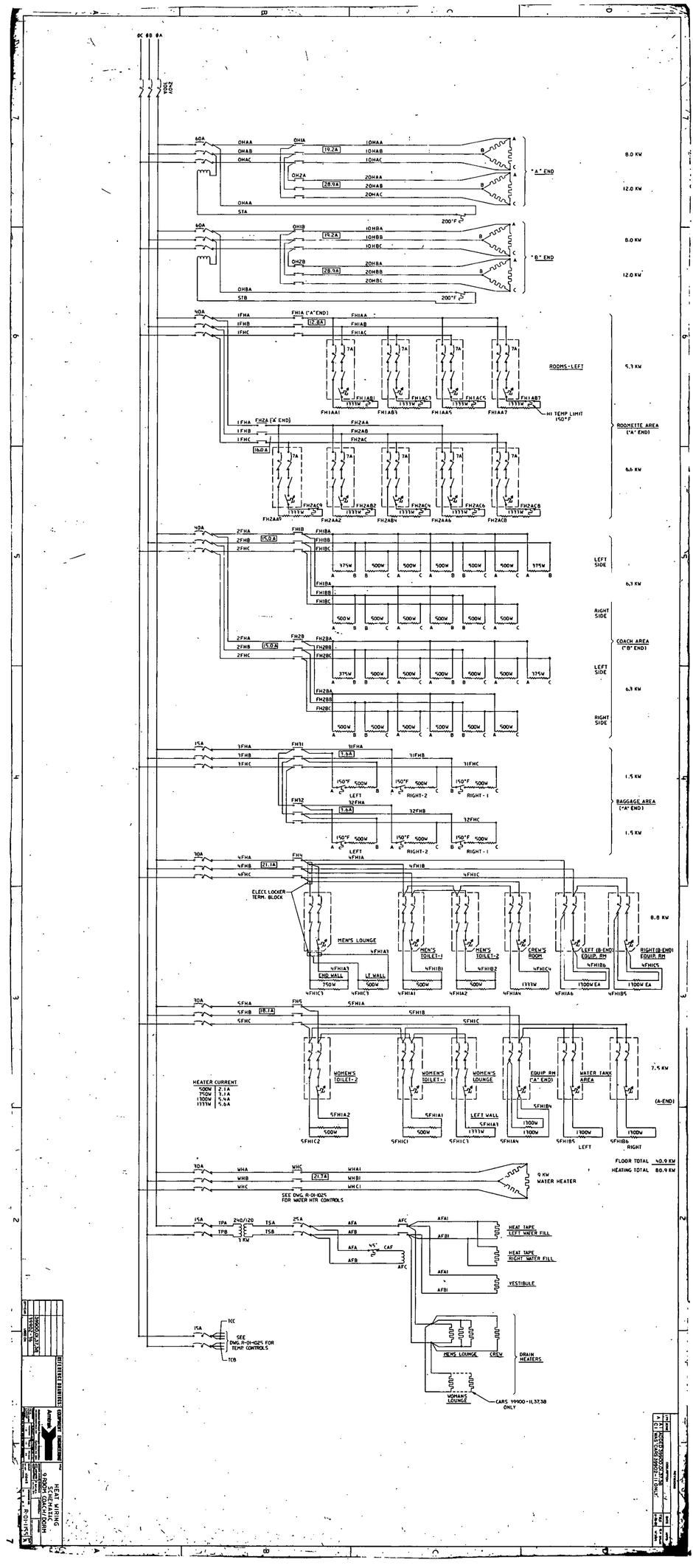
0C 0B 0A
TO SHT 2
60A
0H1A
0H1AA
0H1AB
0H1AC
10.2A
0H2A
0H2AA
0H2AB
0H2AC
28.9A
0HAA
STA
200°F
"A" END
8.0 KW
12.0 KW
0H1B
0H1BA
0H1BB
0H1BC
0H2B
0H2BA
0H2BB
0H2BC
0HBA
STB
"B" END
40A
1FHA
1FHB
1FHC
FH1A ("A" END)
12.8A
FH1AA
FH1AB
FH1AC
7A
FH1AA1
FH1AB1
FH1AC1
FH1AA5
FH1AC5
FH1AA7
FH1AB7
1333W
ROOMS-LEFT
5.3 KW
HI TEMP LIMIT 150°F
FH2A ("A" END)
FH2AA
FH2AB
FH2AC
16.0A
FH2AA9
FH2AA2
FH2AB2
FH2AA6
FH2AC6
FH2AC8
ROOMETTE AREA ("A" END)
6.6 KW
2FHA
2FHB
2FHC
FH1B
FH1BA
FH1BB
FH1BC
15.0A
375W
500W
LEFT SIDE
6.3 KW
RIGHT SIDE
FH2B
FH2BA
FH2BB
FH2BC
COACH AREA ("B" END)
15A
3FHA
3FHB
3FHC
FH31
31FHA
31FHB
31FHC
1.6A
150°F
LEFT
RIGHT-2
RIGHT-1
1.5 KW
FH32
32FHA
32FHB
32FHC
BAGGAGE AREA ("A" END)
30A
4FHA
4FHB
4FHC
FH4
21.1A
4FHIA
4FHIB
4FHIC
ELECT LOCKER TERM. BLOCK
MEN'S LOUNGE
MEN'S TOILET-1
MEN'S TOILET-2
CREW'S ROOM
LEFT (B-END) EQUIP. RM
RIGHT (B-END) EQUIP. RM
END WALL
750W
LT WALL
500W
1333W
1300W EA
8.8 KW
5FHA
5FHB
5FHC
FH5
18.1A
5FHIA
5FHIB
5FHIC
WOMEN'S TOILET-2
WOMEN'S TOILET-1
WOMEN'S LOUNGE
EQUIP RM ("A" END)
WATER TANK AREA
LEFT WALL
1300W
LEFT
RIGHT
7.5 KW
(A-END)
FLOOR TOTAL 40.9 KW
HEATING TOTAL 80.9 KW
HEATER CURRENT
500W 2.1A
750W 3.1A
1300W 5.4A
1333W 5.6A
WHA
WHB
WHC
WHA1
WHB1
WHC1
21.7A
9 KW WATER HEATER
SEE DWG. R-01-102S FOR WATER HTR. CONTROLS
15A
1PA
1PB
240/120
3 KW
1SA
1SB
25A
AFA
AFB
AFC
AFA1
AFB1
45° CAF
HEAT TAPE LEFT WATER FILL
HEAT TAPE RIGHT WATER FILL
VESTIBULE
TCC
TCB
SEE DWG. R-01-102S FOR TEMP CONTROLS
MENS LOUNGE
CREW
DRAIN HEATERS
WOMANS LOUNGE
CARS 19900-11,37,38 ONLY

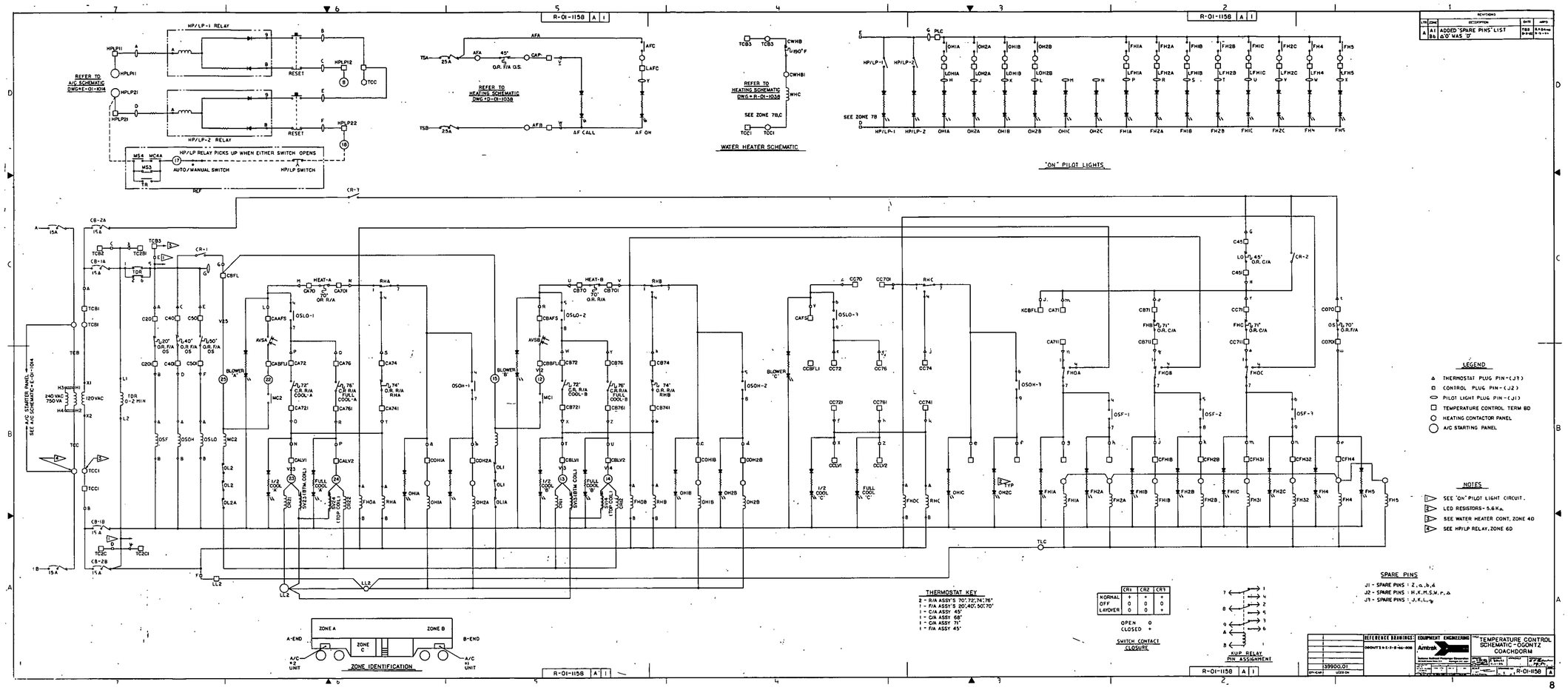

R-01-1158 A 1
REVISIONS
A A1 ADDED "SPARE PINS" LIST
B6 Δ'0' WAS 'D'
HP/LP-1 RELAY
HP/LP-2 RELAY
REFER TO A/C SCHEMATIC DWG=E-01-1014
HP/LP RELAY PICKS UP WHEN EITHER SWITCH OPENS
AUTO/MANUAL SWITCH
HP/LP SWITCH
REFER TO HEATING SCHEMATIC DWG=D-01-1038
WATER HEATER SCHEMATIC
REFER TO HEATING SCHEMATIC DWG=R-01-1038
SEE ZONE 7B,C
SEE ZONE 7B
"ON" PILOT LIGHTS
A/C STARTER PANEL
SEE A/C SCHEMATIC=E-01-1014
240 VAC 750 VA
120 VAC
LEGEND
THERMOSTAT PLUG PIN-(J3)
CONTROL PLUG PIN-(J2)
PILOT LIGHT PLUG PIN-(J1)
TEMPERATURE CONTROL TERM BD
HEATING CONTACTOR PANEL
A/C STARTING PANEL
NOTES
1 SEE "ON" PILOT LIGHT CIRCUIT.
2 LED RESISTORS-5.6KΩ
3 SEE WATER HEATER CONT. ZONE 4D
4 SEE HP/LP RELAY, ZONE 6D
THERMOSTAT KEY
2 - R/A ASSY'S 70°,72°,74°,76°
1 - F/A ASSY'S 20°,40°,50°,70°
1 - C/A ASSY 45°
1 - C/A ASSY 68°
1 - C/A ASSY 71°
1 - F/A ASSY 45°
SPARE PINS
J1 - SPARE PINS : Z,a,b,d
J2 - SPARE PINS : H,K,M,S,W,r,Δ
J3 - SPARE PINS : J,K,L,y
CR1 CR2 CR3
NORMAL + + +
OFF 0 0 0
LAYOVER 0 0 +
OPEN 0
CLOSED +
SWITCH CONTACT CLOSURE
KUP RELAY PIN ASSIGNMENT
ZONE A
ZONE B
ZONE C
A-END
B-END
A/C #2 UNIT
A/C #1 UNIT
ZONE IDENTIFICATION
REFERENCE DRAWINGS
EQUIPMENT ENGINEERING
Amtrak
TEMPERATURE CONTROL SCHEMATIC-OGONTZ COACHDORM
139900.01
R-01-1158 A 1

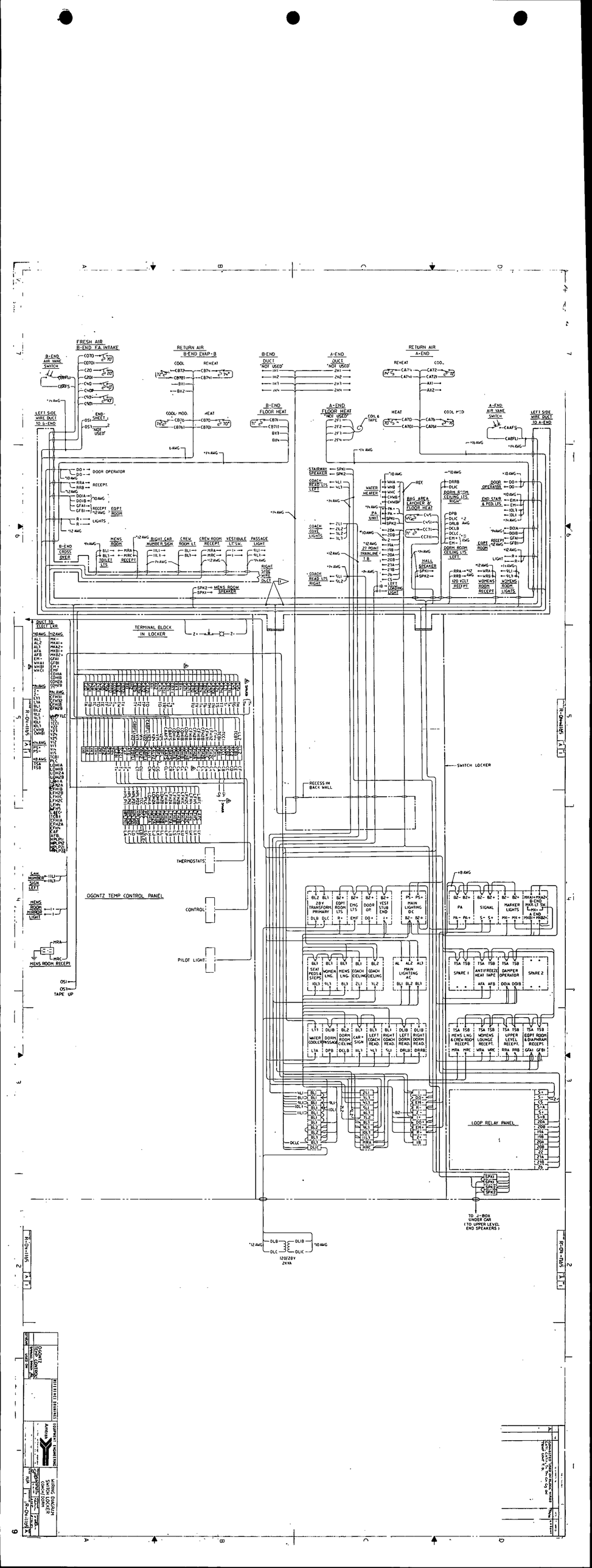
FRESH AIR
B-END FA INTAKE
RETURN AIR
B-END EVAP-B
B-END
DUCT
'NOT USED'
A-END
DUCT
'NOT USED'
RETURN AIR
A-END
B-END
AIR VANE
SWITCH
B-END FLOOR HEAT
A-END
FLOOR HEAT
'NOT USED'
A-END
AIR VANE
SWITCH
LEFT SIDE
WIRE DUCT
TO A-END
LEFT SIDE
WIRE DUCT
TO B-END
DOOR OPERATOR
RECEPT.
RECEPT
12 AWG
EQPT
ROOM
LIGHTS
END:
SHEET 1
NOT
USED
STAIRWAY
SPEAKER
COACH
READ LTS
LEFT
COACH
READ LTS
RIGHT
COACH
COVE
LIGHTS
WATER
HEATER
PA
UNIT
27 POINT
TRAIN LINE
T.B.
BAG AREA
HEATER & FLOOR HEAT
HALL
SPEAKER
120 VOLT
RECEPT
DOOR ROOM
CEILING LTS
LEFT
DOOR ROOM
CEILING LTS
RIGHT
DOOR
OPERATOR
END STAIR
& PED LTS
EQPT
ROOM
WOMENS
ROOM
RECEPT
WOMENS
ROOM
LIGHTS
MENS
ROOM
CROSS
OVER
RIGHT CAR
NUMBER SIGN
CREW
ROOM LT.
CREW ROOM
RECEPT.
VESTIBULE
LT'SW.
PASSAGE
LIGHT
TOILET
LTS
RECEPT
RIGHT SIDE
WIRE DUCT
SPK2 → MENS ROOM SPEAKER
SPK1 →
DUCT TO
ELECT. EQP.
TERMINAL BLOCK
IN LOCKER
SWITCH LOCKER
RECESS IN
BACK WALL
THERMOSTATS
OGONTZ TEMP. CONTROL PANEL
CONTROL
PILOT LIGHT
CAR
NUMBER
SIGN
LEFT
MENS
ROOM
MIRROR
LIGHT
MENS ROOM RECEPT
TAPE UP
28 V
TRANSFORM.
PRIMARY
SEAT
PEDS &
STEPS
WOMENS
LNG.
MENS
LNG.
EMG
LTS
COACH
CEILING
DOOR
OP.
VEST
STUB
END
MAIN
LIGHTING
DC
MAIN
LIGHTING
AC
PA
SIGNAL
ANTIFREZE
HEAT TAPE
MARKER
LIGHTS
DAMPER
OPERATOR
SPARE 1
SPARE 2
WATER
COOLER
DOOR
PASSAGE
DOOR
ROOM
CEILING
CAR
SIGN
LEFT
COACH
READ.
RIGHT
COACH
READ.
LEFT
DORM
READ.
RIGHT
DORM
READ.
MENS LNG
& CREW ROOM
RECEPT.
WOMENS
LOUNGE
RECEPT.
UPPER
LEVEL
RECEPT.
EQPT ROOM
& DIAPHRAM
RECEPT.
LOOP RELAY PANEL
TO J-BOX
UNDER CAR
(TO UPPER LEVEL
END SPEAKERS)
120/208V
2KVA
DLB
DLC
DLIB
DLIC
SHEET 5
SHEET 4
SHEET 3
SHEET 2
SHEET 1
FROM SHEET 5
FROM SHEET 4
FROM SHEET 3
FROM SHEET 2
FROM SHEET 1
TO SHEET 5
TO SHEET 4
TO SHEET 3
TO SHEET 2
TO SHEET 1
ANTRAN
ELECTRICAL DRAWINGS
EQUIPMENT ENGINEERING
WIRING DIAGRAM
SWITCH LOCKER
PROJECT
DRAWING NO.
SHEET
REVISIONS
DESCRIPTION
DATE
APPROVED
DRAWN
CHECKED
SCALE
NONE
DATE
TITLE
CONTRACT NO.
DRAWING NO.
SHEET NO.
REVISIONS

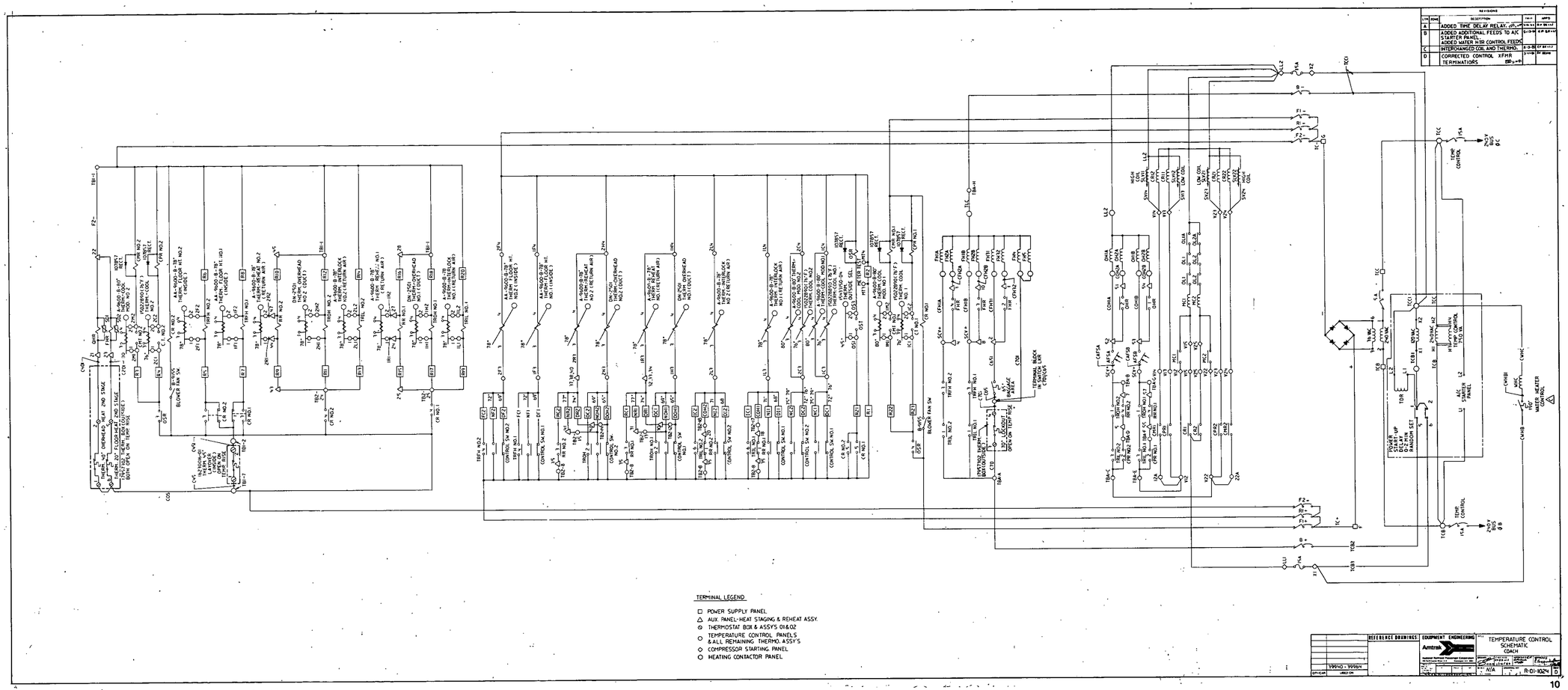
REVISIONS
LTR | ZONE | DESCRIPTION | DATE | APP'D
A | ADDED TIME DELAY RELAY.
B | ADDED ADDITIONAL FEEDS TO A/C STARTER PANEL. ADDED WATER HTR CONTROL FEEDS
C | INTERCHANGED COIL AND THERMO.
D | CORRECTED CONTROL XFMR TERMINATORS
TERMINAL LEGEND
POWER SUPPLY PANEL
AUX. PANEL-HEAT STAGING & REHEAT ASSY.
THERMOSTAT BOX & ASSY'S 01&02
TEMPERATURE CONTROL PANELS & ALL REMAINING THERMO. ASSY'S
COMPRESSOR STARTING PANEL
HEATING CONTACTOR PANEL
REFERENCE DRAWINGS:
EQUIPMENT ENGINEERING
Amtrak
TEMPERATURE CONTROL SCHEMATIC COACH
N/A
R-01-1024
D
10

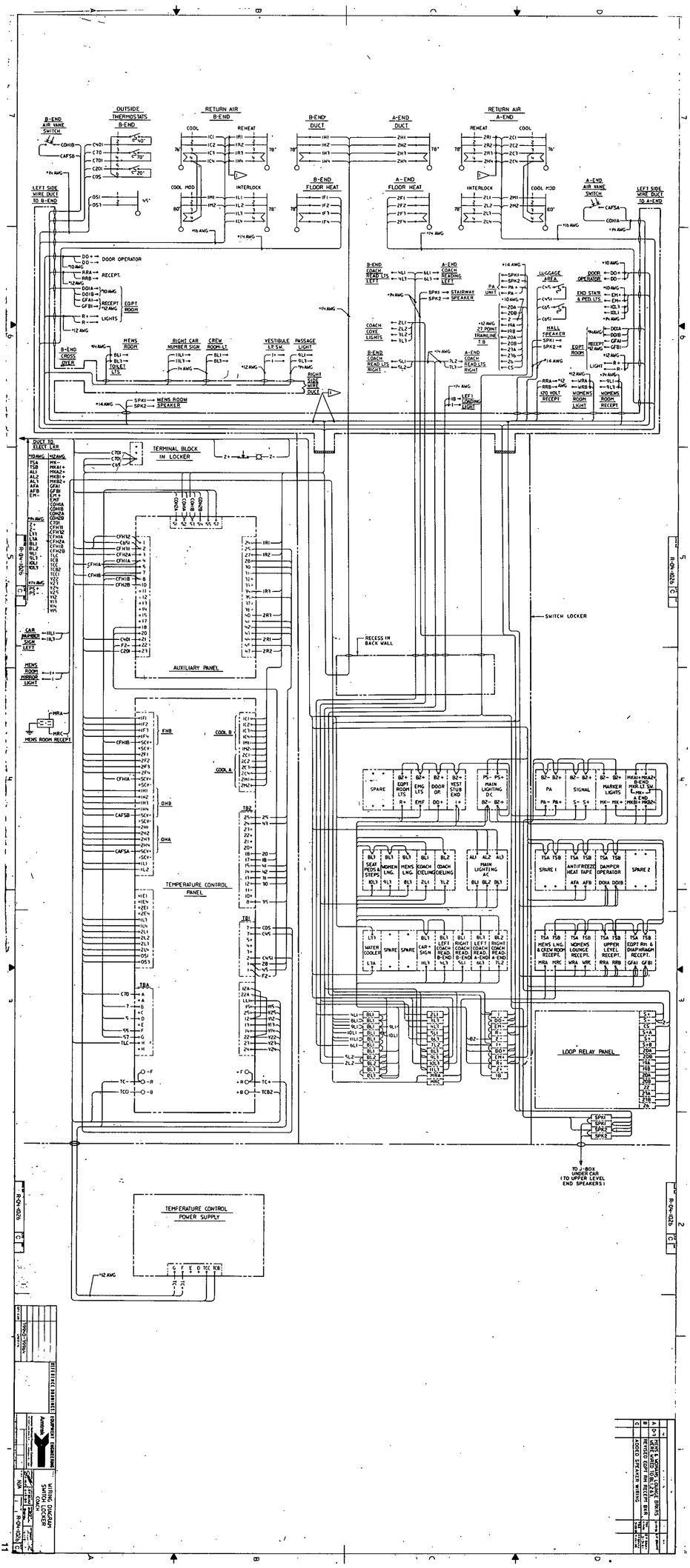
B-END AIR VANE SWITCH
OUTSIDE THERMOSTATS B-END
RETURN AIR B-END
B-END DUCT
A-END DUCT
RETURN AIR A-END
LEFT SIDE WIRE DUCT TO B-END
B-END FLOOR HEAT
A-END FLOOR HEAT
A-END AIR VANE SWITCH
LEFT SIDE WIRE DUCT TO A-END
DOOR OPERATOR
RECEPT.
LIGHTS
EQPT. ROOM
B-END CROSS OVER
MENS ROOM
RIGHT CAR NUMBER SIGN
CREW ROOM LT
VESTIBULE LT SW.
PASSAGE LIGHT
RIGHT SIDE WIRE DUCT
MENS ROOM SPEAKER
B-END COACH READ LTS LEFT
A-END COACH READING LEFT
STAIRWAY SPEAKER
PA UNIT
LUGGAGE AREA
END STAR & PED LTS
HALL SPEAKER
27 POINT TRAINLINE TB
B-END COACH READ LTS RIGHT
A-END COACH READ LTS RIGHT
LOADING LIGHT
120 VOLT RECEPT
WOMENS ROOM LIGHT
WOMENS ROOM RECEPT
DUCT TO ELECT CER
TERMINAL BLOCK IN LOCKER
SWITCH LOCKER
AUXILIARY PANEL
RECESS IN BACK WALL
CAR NUMBER SIGN LEFT
MENS ROOM MIRROR LIGHT
MENS ROOM RECEPT
TEMPERATURE CONTROL PANEL
TEMPERATURE CONTROL POWER SUPPLY
LOOP RELAY PANEL
TO J-BOX UNDER CAR (TO UPPER LEVEL END SPEAKERS)
SPARE
EQPT ROOM LTS
ENG LTS
DOOR OP
TOILET STUB END
MAIN LIGHTING DC
PA
SIGNAL
MARKER LIGHTS
SEAT MENS STEPS
WOMENS LNG.
MENS LNG.
COACH CEILING
MAIN LIGHTING AC
SPARE 1
ANTIFREEZE HEAT TAPE
DAMPER OPERATOR
SPARE 2
WATER COOLER
CAR SIGN
LEFT COACH READ END
RIGHT COACH READ END
MENS LNG & CREW ROOM RECEPT.
WOMENS LOUNGE RECEPT.
UPPER LEVEL RECEPT.
EQPT RM & DIAPHRAGM RECEPT.
R-04-1026 C-1
R-04-1025 C-1
R-04-1027 C-1

| | | |

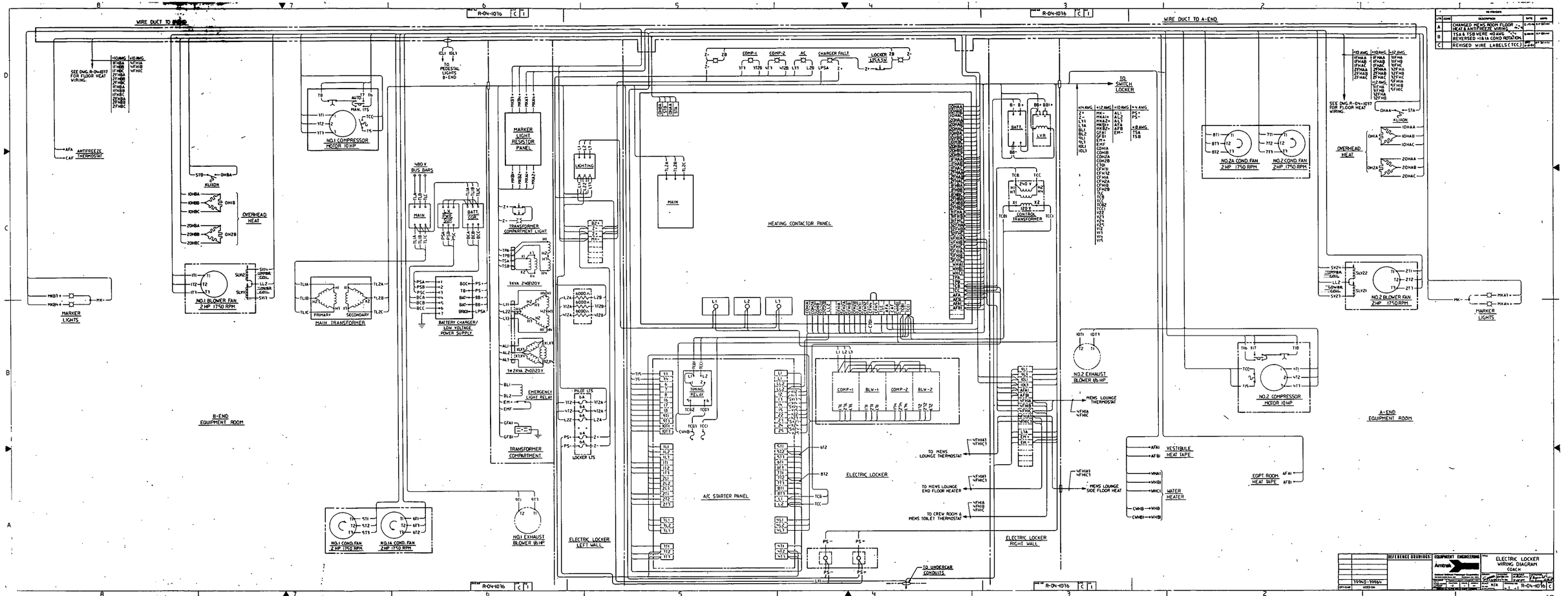
WIRE DUCT TO A-END
WIRE DUCT TO B-END
SEE DWG. R-04-1017 FOR FLOOR HEAT WIRING.
ANTIFREEZE THERMOSTAT
KLIXON
OVERHEAD HEAT
NO.1 COMPRESSOR MOTOR 10 HP
NO.1 BLOWER FAN 2 HP 1750 RPM
MARKER LIGHTS
MAIN TRANSFORMER
PRIMARY
SECONDARY
BATTERY CHARGER/ LOW VOLTAGE POWER SUPPLY
TO PEDESTAL LIGHTS B-END
MARKER LIGHT RESISTOR PANEL
TRANSFORMER COMPARTMENT LIGHT
3KVA 240/120V
3 x 2KVA 240/120V
EMERGENCY LIGHT RELAY
TRANSFORMER COMPARTMENT
LIGHTING
PILOT LTS
LOCKER LTS
ELECTRIC LOCKER LEFT WALL
NO.1 EXHAUST BLOWER 1/6 HP
NO.1 COND. FAN 2 HP 1750 RPM
NO.1A COND. FAN 2 HP 1750 RPM
B-END EQUIPMENT ROOM
HEATING CONTACTOR PANEL
MAIN
COMP-1
COMP-2
AC
CHARGER FAULT
LOCKER LTS A SW
TIMING RELAY
A/C STARTER PANEL
ELECTRIC LOCKER
TO MENS LOUNGE THERMOSTAT
TO MENS LOUNGE END FLOOR HEATER
TO CREW ROOM & MENS TOILET THERMOSTAT
TO UNDERCAR CONDUITS
ELECTRIC LOCKER RIGHT WALL
TO SWITCH LOCKER
CONTROL TRANSFORMER
NO.2 EXHAUST BLOWER 1/6 HP
MENS LOUNGE THERMOSTAT
MENS LOUNGE SIDE FLOOR HEAT
VESTIBULE HEAT TAPE
WATER HEATER
EQPT. ROOM HEAT TAPE
NO.2A COND. FAN 2 HP 1750 RPM
NO.2 COND. FAN 2 HP 1750 RPM
NO.2 BLOWER FAN 2 HP 1750 RPM
NO.2 COMPRESSOR MOTOR 10 HP
A-END EQUIPMENT ROOM
REVISIONS
A CHANGED MENS ROOM FLOOR HEAT & ANTIFREEZE WIRING
B TSA & TSB WERE 40 AWG REVERSED +1&1A COND ROTATION
C REVISED WIRE LABELS (TCC)
REFERENCE DRAWINGS:
EQUIPMENT ENGINEERING
Amtrak
ELECTRIC LOCKER WIRING DIAGRAM COACH
39940-39964
R-04-1036
12

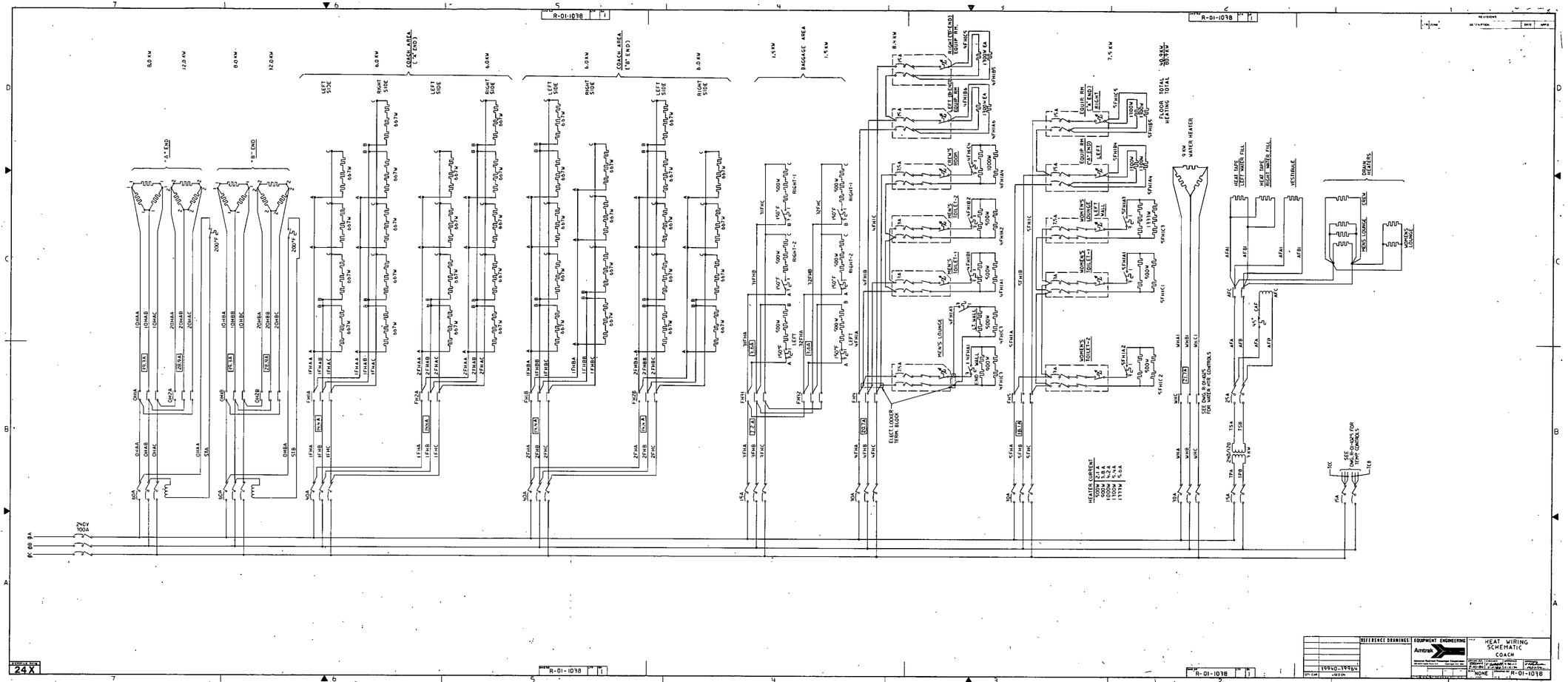

R-01-1038
COACH AREA ("A" END)
COACH AREA ("B" END)
BAGGAGE AREA
LEFT SIDE
RIGHT SIDE
"A" END
"B" END
FLOOR TOTAL
HEATING TOTAL
9 KW WATER HEATER
HEAT TAPE LEFT WATER FILL
HEAT TAPE RIGHT WATER FILL
VESTIBULE
DRAIN HEATERS
MEN'S LOUNGE
WOMEN'S LOUNGE
ELECT LOCKER TERM. BLOCK
SEE DWG. R-01-405 FOR WATER HTR CONTROLS
SEE DWG. R-01-405 FOR TEMP CONTROLS
HEATER CURRENT
24X
REFERENCE DRAWINGS
EQUIPMENT ENGINEERING
Amtrak
HEAT WIRING SCHEMATIC
COACH
NONE
R-01-1038

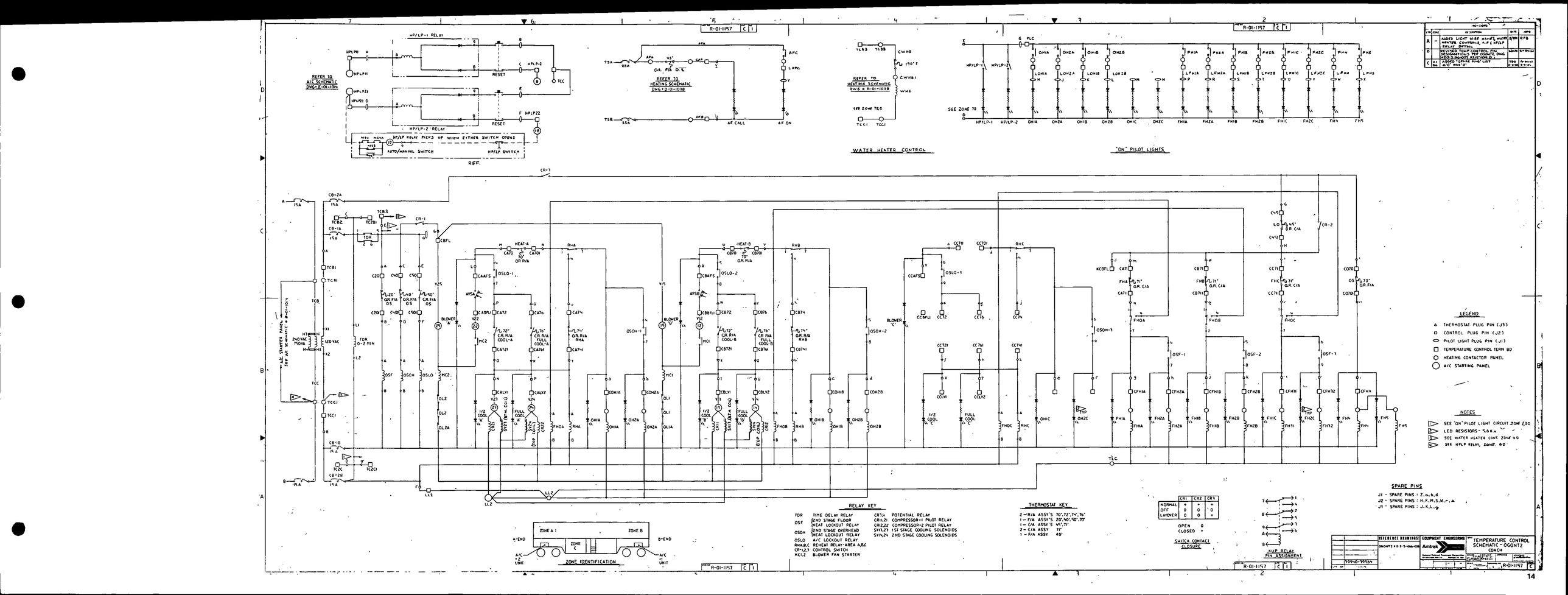
HP/LP-1 RELAY
HP/LP-2 RELAY
REFER TO A/C SCHEMATIC DWG # E-01-1004
HP/LP RELAY PICKS UP WHEN EITHER SWITCH OPENS
AUTO/MANUAL SWITCH
HP/LP SWITCH
REF.
RESET
REFER TO HEATING SCHEMATIC DWG # R-01-1038
AF CALL
AF ON
WATER HEATER CONTROL
SEE ZONE 7B
"ON" PILOT LIGHTS
REV-CONFG
DESCRIPTION
ADDED LIGHT WIRE WARM'S WATER HEATER CONTROLS, H.P.(HP/LP RELAY CHANGE.
REVISED TEMP CONTROL PIN DESIGNATIONS PER DOCNTE DWG #E3-3-06-005 REVISIONS.
ADDED "SPARE PINS" LIST & "C" WAS "D"
A/C STARTER PANEL SEE A/C SCHEMATIC # E-01-1004
TDR 0-2 MIN
2HP/1VAC 1 PHASE
120 VAC
HEAT-A
HEAT-B
BLOWER A
BLOWER B
BLOWER C
OSOH-1
OSOH-2
OSOH-3
OSF-1
OSF-2
OSF-3
1/2 COOL A
FULL COOL A
1/2 COOL B
FULL COOL B
1/2 COOL C
FULL COOL C
ZONE A
ZONE B
A-END
B-END
ZONE IDENTIFICATION
RELAY KEY
TDR TIME DELAY RELAY
OSF 2ND STAGE FLOOR HEAT LOCKOUT RELAY
OSOH 2ND STAGE OVERHEAD HEAT LOCKOUT RELAY
OSLO A/C LOCKOUT RELAY
RHA,B,C REHEAT RELAY-AREA A,B,C
CR=1,2,3 CONTROL SWITCH
MC1,2 BLOWER FAN STARTER
CR1n POTENTIAL RELAY
CR11,21 COMPRESSOR-1 PILOT RELAY
CR12,22 COMPRESSOR-2 PILOT RELAY
SV11,21 1ST STAGE COOLING SOLENOIDS
SV14,24 2ND STAGE COOLING SOLENOIDS
THERMOSTAT KEY
2 – R/A ASSY'S 70°,72°,74°,76°
1 – F/A ASSY'S 20°,40°,60°,70°
1 – C/A ASSY'S 45°,71°
2 – C/A ASSY 71°
1 – F/A ASSY 49°
CR1 CR2 CR3
NORMAL + + +
OFF 0 0 +
LAYOVER 0 0 +
OPEN 0
CLOSED +
SWITCH CONTACT CLOSURE
KUP RELAY PIN ASSIGNMENT
LEGEND
THERMOSTAT PLUG PIN (J3)
CONTROL PLUG PIN (J2)
PILOT LIGHT PLUG PIN (J1)
TEMPERATURE CONTROL TERM BD
HEATING CONTACTOR PANEL
A/C STARTING PANEL
NOTES
SEE "ON" PILOT LIGHT CIRCUIT ZONE 23D
LED RESISTORS- 5.6 K Ω
SEE WATER HEATER CONT. ZONE 4D
SEE H/P/LP RELAY, ZONE 8D
SPARE PINS
J1 – SPARE PINS : Z, a, b, d
J2 – SPARE PINS : H, K, M, S, W, F, A
J3 – SPARE PINS : J, K, L, g
REFERENCE DRAWINGS
DOCNTE # E-3-5-06-006
EQUIPMENT ENGINEERING
Amtrak
TEMPERATURE CONTROL SCHEMATIC - DOGNTZ COACH
R-01-1157 C
14

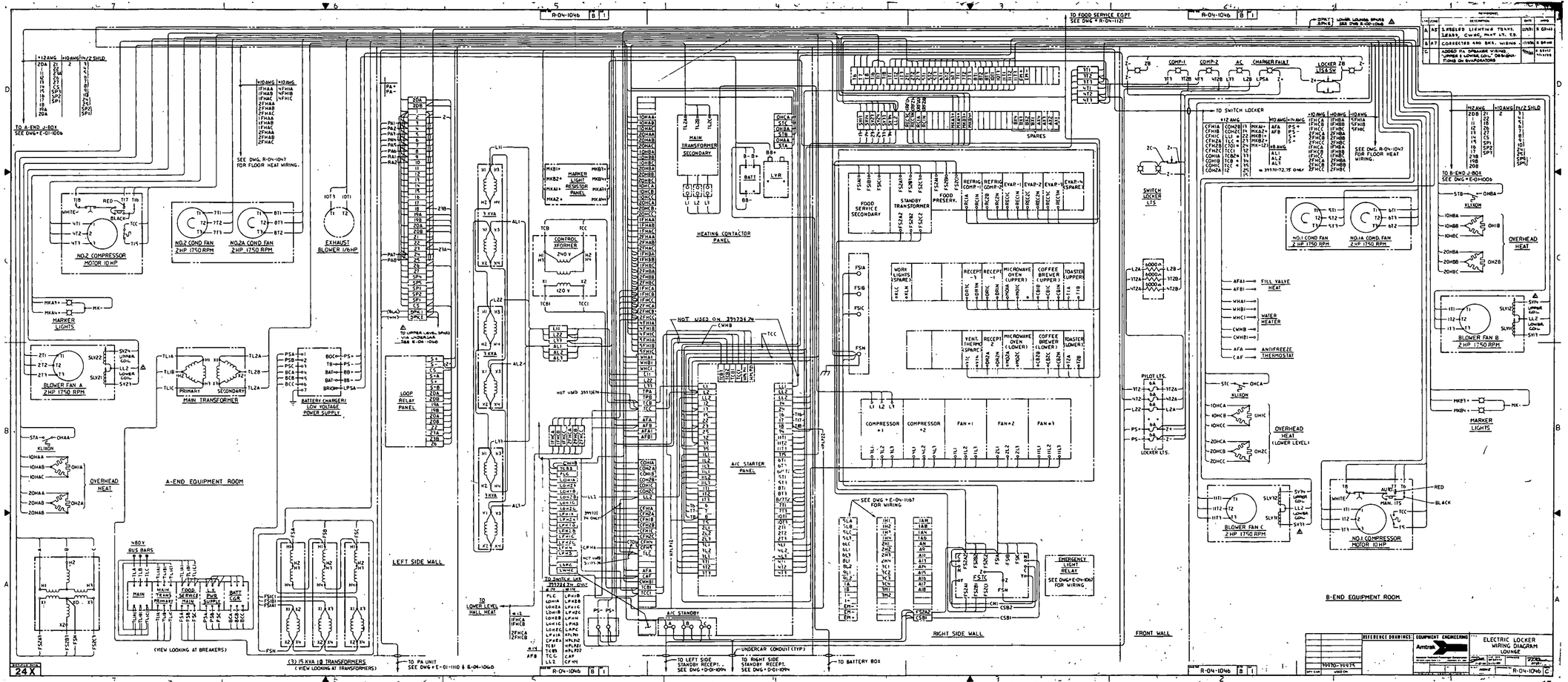
A-END EQUIPMENT ROOM
B-END EQUIPMENT ROOM
LEFT SIDE WALL
RIGHT SIDE WALL
FRONT WALL
NO.2 COMPRESSOR MOTOR 10 HP
NO.1 COMPRESSOR MOTOR 10 HP
NO.2 COND FAN 2 HP 1750 RPM
NO.2A COND FAN 2 HP 1750 RPM
NO.1 COND FAN 2 HP 1750 RPM
NO.1A COND FAN 2 HP 1750 RPM
EXHAUST BLOWER 1/6 HP
BLOWER FAN A 2 HP 1750 RPM
BLOWER FAN B 2 HP 1750 RPM
BLOWER FAN C 2 HP 1750 RPM
MAIN TRANSFORMER
PRIMARY
SECONDARY
MAIN TRANSFORMER SECONDARY
CONTROL XFORMER
BATTERY CHARGER/ LOW VOLTAGE POWER SUPPLY
LOOP RELAY PANEL
MARKER LIGHTS
OVERHEAD HEAT
WATER HEATER
ANTIFREEZE THERMOSTAT
FILL VALVE HEAT
HEATING CONTACTOR PANEL
A/C STARTER PANEL
A/C STANDBY
MARKER LIGHTS
SWITCH LOCKER LTS
PILOT LTS.
LOCKER LTS.
FOOD SERVICE SECONDARY
STANDBY TRANSFORMER
FOOD PRESERV.
WORK LIGHTS (SPARE)
RECEPT. -1
RECEPT. -2
MICROWAVE OVEN (UPPER)
COFFEE BREWER (UPPER)
TOASTER (UPPER)
VENT. THERMO (SPARE)
MICROWAVE OVEN (LOWER)
COFFEE BREWER (LOWER)
TOASTER (LOWER)
COMPRESSOR #1
COMPRESSOR #2
FAN #1
FAN #2
FAN #3
SPARES
EMERGENCY LIGHT RELAY
MAIN
TRANS PRIMARY
FOOD SERVICE MAIN
LL SUPPLY
DWR SUPPLY
BATT CHGR
480V BUS BARS
(VIEW LOOKING AT BREAKERS)
(3) 15 KVA 1Ø TRANSFORMERS
(VIEW LOOKING AT TRANSFORMERS)
TO A-END J-BOX SEE DWG # E-01-1006
TO B-END J-BOX SEE DWG # E-01-1006
TO FOOD SERVICE EQPT SEE DWG # R-04-1112
TO SWITCH LOCKER
SEE DWG. R-04-1047 FOR FLOOR HEAT WIRING.
TO UPPER LEVEL SPKR VIA UNDERLOA 366 E-04-1046
TO PA UNIT SEE DWG # E-01-1110 & E-04-1060
TO LOWER LEVEL HALL HEAT
TO LEFT SIDE STANDBY RECEPT. SEE DWG # D-01-1094
TO RIGHT SIDE STANDBY RECEPT. SEE DWG # D-01-1094
TO BATTERY BOX
UNDERCAR CONDUIT (TYP.)
SEE DWG # E-04-11167 FOR WIRING
NOT USED ON 3997264 PN
NOT USED 3997324 PN
3997324 PN ONLY
3997324 PN ONLY
R-04-1046 B 1
R-04-1046 C
24X
REFERENCE DRAWINGS:
EQUIPMENT ENGINEERING
Amtrak
99970-99974
ELECTRIC LOCKER WIRING DIAGRAM LOUNGE
27703
SCALE: NONE
DRAWN
CHECKED
APPROVED
DATE
SHEET 1 OF 1
REVISIONS
LTR
ZONE
DESCRIPTION
DATE
APPROVED
A
A2
3-PEELED LIGHTING TRANS. 3-BASS, CHANG PART NO. TO.
1/30/81
B. GRAD
A7
CORRECTED 480 BKR. WIRING
11/30/81
B. BAKER
C
ADDED PA SPEAKER WIRING CHANGED SOME CONFIGURATIONS ON SWITCHBOARDS
3/22/82
B. BAKER
3/31/82

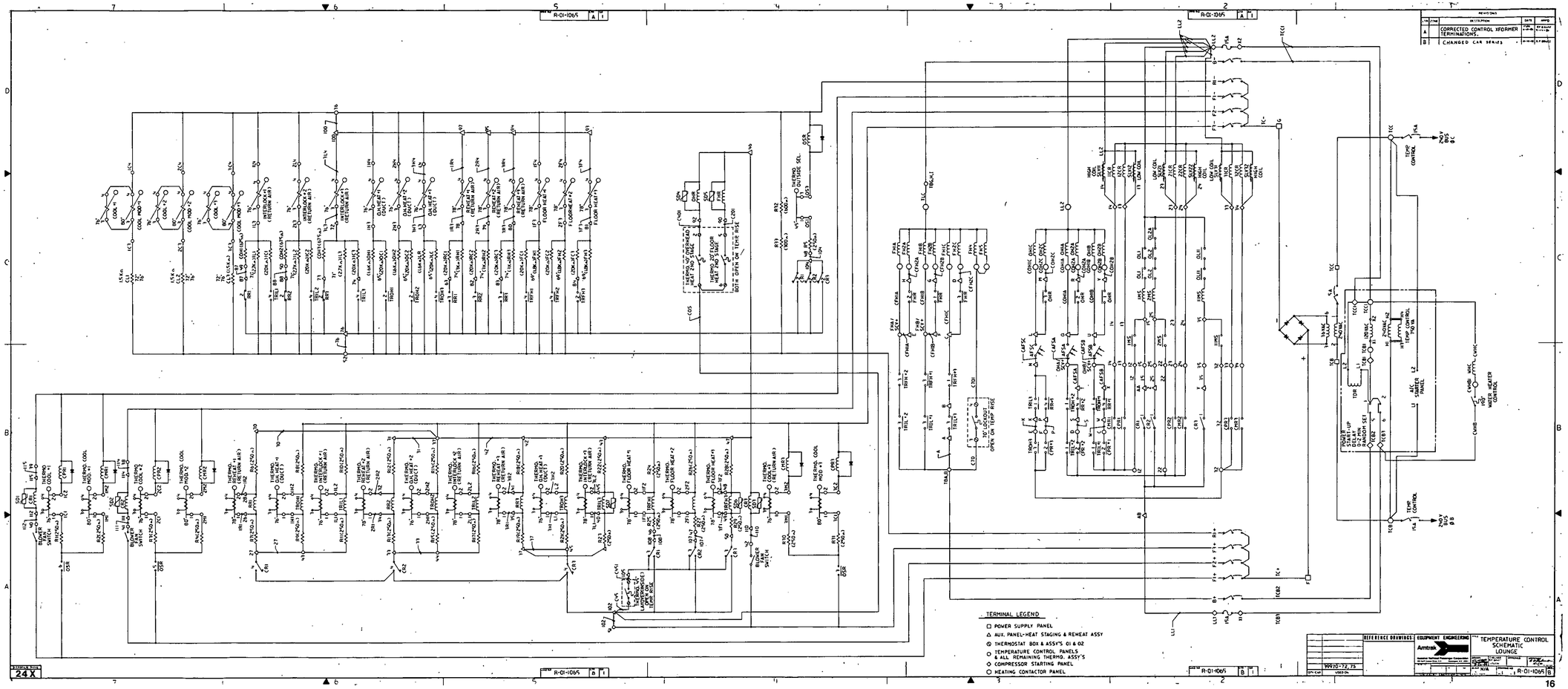

REVISIONS
A CORRECTED CONTROL XFORMER TERMINATIONS.
B CHANGED CAR SERIES
TERMINAL LEGEND
POWER SUPPLY PANEL
AUX. PANEL-HEAT STAGING & REHEAT ASSY
THERMOSTAT BOX & ASSY'S 01 & 02
TEMPERATURE CONTROL PANELS & ALL REMAINING THERMO. ASSY'S
COMPRESSOR STARTING PANEL
HEATING CONTACTOR PANEL
REFERENCE DRAWINGS
EQUIPMENT ENGINEERING
Amtrak
TEMPERATURE CONTROL SCHEMATIC LOUNGE
99970-72, 75
R-01-1065
24X
16

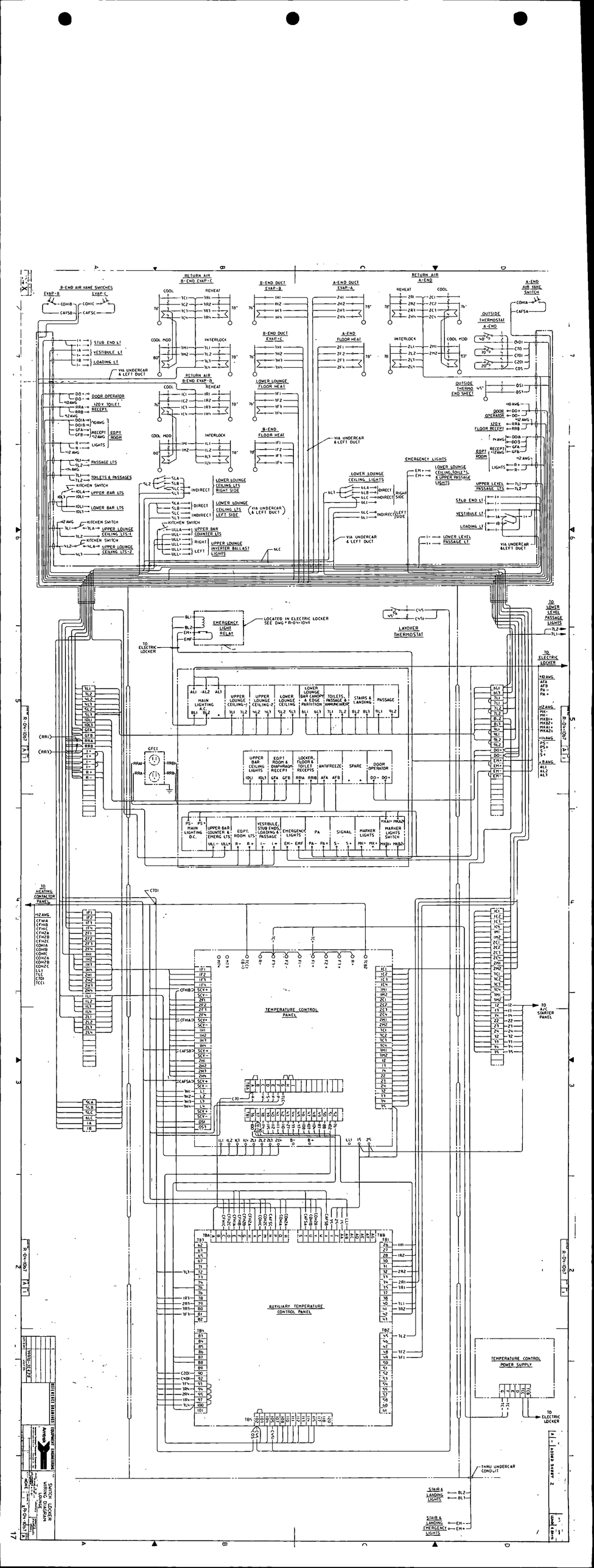
B-END AIR VANE SWITCHES
EVAP-B
EVAP-C
RETURN AIR B-END EVAP-C
B-END DUCT EVAP-B
A-END DUCT EVAP-A
RETURN AIR A-END
A-END AIR VANE SWITCH
OUTSIDE THERMOSTAT A-END
STUB END LT
VESTIBULE LT
LOADING LT
DOOR OPERATOR
120 V TOILET RECEPT
RECEPT 20 AMP ROOM
LIGHTS
PASSAGE LTS
TOILETS & PASSAGES
KITCHEN SWITCH
UPPER BAR LTS
LOWER BAR LTS
UPPER LOUNGE CEILING LTS-1
UPPER LOUNGE CEILING LTS-2
LOWER LOUNGE CEILING LTS RIGHT SIDE
LOWER LOUNGE CEILING LTS LEFT SIDE
UPPER LOUNGE INVERTER BALLAST LIGHTS
LOWER LOUNGE FLOOR HEAT
B-END FLOOR HEAT
A-END FLOOR HEAT
LOWER LOUNGE CEILING LIGHTS
LOWER LOUNGE CEILING TOILETS & UPPER PASSAGE LIGHTS
EMERGENCY LIGHTS
UPPER LEVEL PASSAGE LTS
LOWER LEVEL PASSAGE LT
VIA UNDERCAR & LEFT DUCT
EMERGENCY LIGHT RELAY
LOCATED IN ELECTRIC LOCKER SEE DWG R-04-1049
LAYOVER THERMOSTAT
TO LOWER LEVEL PASSAGE LIGHTS
TO ELECTRIC LOCKER
MAIN LIGHTING A.C.
UPPER LOUNGE CEILING-1
UPPER LOUNGE CEILING-2
LOWER LOUNGE CEILING
LOWER LOUNGE BAR CANOPY & EDGE PARTITION
TOILETS, PASSAGE & ANNUNCIATOR
STAIRS & LANDING
PASSAGE
GFCI
UPPER BAR CEILING LIGHTS
EQPT ROOM & EMERGENCY RECEPT
LOCKER, FLOOR & TOILET RECEPTS
ANTIFREEZE
SPARE
DOOR OPERATOR
MAIN LIGHTING D.C.
UPPER BAR COUNTER & EMERG LTS
EQPT. ROOM LTS
VESTIBULE, STUB ENDS, LOADING & PASSAGE
EMERGENCY LIGHTS
PA
SIGNAL
MARKER LIGHTS
MARKER LIGHTS SWITCH
TO HEATING CONTACTOR PANEL
TEMPERATURE CONTROL PANEL
TO A/C STARTER PANEL
AUXILIARY TEMPERATURE CONTROL PANEL
TEMPERATURE CONTROL POWER SUPPLY
TO ELECTRIC LOCKER
THRU UNDERCAR CONDUIT
STAIR & LANDING LIGHTS
STAIR & LANDING EMERGENCY LIGHTS
R-04-1047
R-04-1048
R-04-1049
R-04-1050
R-04-1051
R-04-1052
R-04-1053
R-04-1054
R-04-1055
R-04-1056
R-04-1057
R-04-1058
R-04-1059
R-04-1060
R-04-1061
R-04-1062
R-04-1063
R-04-1064
R-04-1065
R-04-1066
R-04-1067
R-04-1068
R-04-1069
R-04-1070
R-04-1071
R-04-1072
R-04-1073
R-04-1074
R-04-1075
R-04-1076
R-04-1077
R-04-1078
R-04-1079
R-04-1080
R-04-1081
R-04-1082
R-04-1083
R-04-1084
R-04-1085
R-04-1086

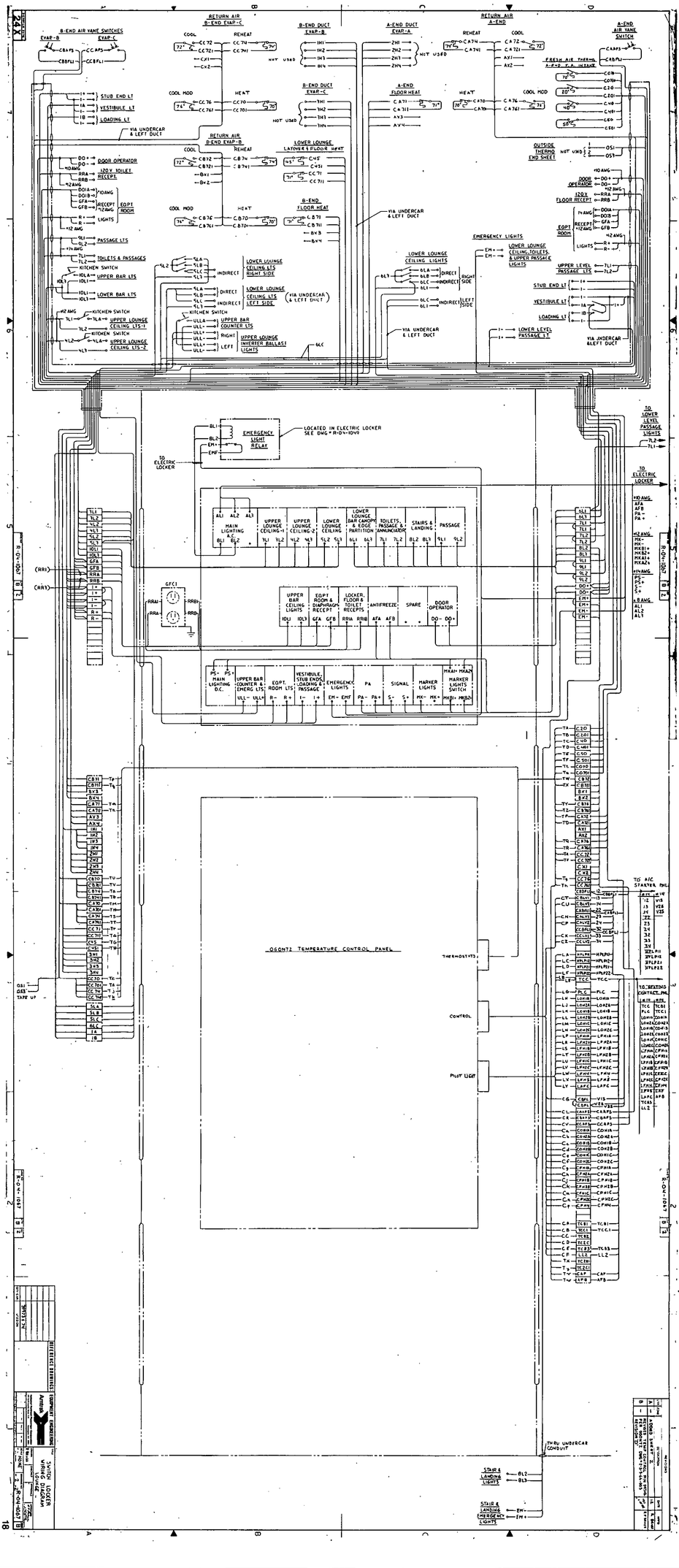
24 X
B-END AIR VANE SWITCHES
EVAP-B
EVAP-C
RETURN AIR
B-END EVAP-C
B-END DUCT
EVAP-B
A-END DUCT
EVAP-A
RETURN AIR
A-END
A-END
AIR VANE
SWITCH
FRESH AIR THERMO
A/P&T C/A INLEAKE
COOL
REHEAT
HEAT
COOL MOD
NOT USED
STUB END LT
VESTIBULE LT
LOADING LT
VIA UNDERCAR
& LEFT DUCT
RETURN AIR
B-END EVAP-B
LOWER LOUNGE
LATOVER & FLOOR HEAT
B-END
FLOOR HEAT
A-END
FLOOR HEAT
OUTSIDE
THERMO
END SHEET
DOOR OPERATOR
120V TOILET
RECEPT
EQPT
ROOM
RECEPT
LIGHTS
PASSAGE LTS
TOILETS & PASSAGES
KITCHEN SWITCH
UPPER BAR LTS
LOWER BAR LTS
KITCHEN SWITCH
UPPER LOUNGE
CEILING LTS-1
KITCHEN SWITCH
UPPER LOUNGE
CEILING LTS-2
INDIRECT
LOWER LOUNGE
CEILING LTS
RIGHT SIDE
DIRECT
LOWER LOUNGE
CEILING LTS
LEFT SIDE
INDIRECT
(VIA UNDERCAR
& LEFT DUCT)
UPPER BAR
COUNTER LTS
RIGHT
LEFT
UPPER LOUNGE
INFERRED BALLAST
LIGHTS
GLC
EMERGENCY LIGHTS
LOWER LOUNGE
CEILING LIGHTS
DIRECT
INDIRECT
RIGHT SIDE
LEFT SIDE
LOWER LOUNGE
CEILING, TOILETS
& UPPER PASSAGE
LIGHTS
UPPER LEVEL
PASSAGE LTS
LOWER LEVEL
PASSAGE LT
VIA UNDERCAR
& LEFT DUCT
EMERGENCY
LIGHT
RELAY
LOCATED IN ELECTRIC LOCKER
SEE DWG P-R04-1049
TO
ELECTRIC
LOCKER
TO
LOWER
LEVEL
PASSAGE
LIGHTS
TO
ELECTRIC
LOCKER
MAIN
LIGHTING
A/C
UPPER
LOUNGE
CEILING-1
UPPER
LOUNGE
CEILING-2
LOWER
LOUNGE
CEILING
LOWER
LOUNGE
BAR CANOPY
& EDGE
PARTITION
TOILETS,
PASSAGE &
ANNUNCIATOR
STAIRS &
LANDING
PASSAGE
GFCI
UPPER
BAR
CEILING
LIGHTS
EQPT
ROOM &
DIAPHRAGM
RECEPT
LOCKER,
FLOOR &
TOILET
RECEPTS
ANTIFREEZE
SPARE
DOOR
OPERATOR
PS+ PS+
MAIN
LIGHTING
D.C.
UPPER BAR
COUNTER &
EMERG LTS
EQPT.
ROOM LTS
VESTIBULE,
STUB ENDS,
LOADING &
PASSAGE
EMERGENCY
LIGHTS
PA
SIGNAL
MARKER
LIGHTS
MARKER
LIGHTS
SWITCH
OSGNTZ TEMPERATURE CONTROL PANEL
THERMOSTATS
CONTROL
PILOT LIGHT
TO A/C
STARTER PNL
TO HEATING
CONTACTOR PNL
THRU UNDERCAR
CONDUIT
STAIR &
LANDING
LIGHTS
STAIR &
LANDING
EMERGENCY
LIGHTS
SWITCH LOCKER
WIRING DIAGRAM
Amtrak
P-R04-1007
P-R04-1047
P-R04-1049
P-R04-1050
P-R04-1051
P-R04-1052
P-R04-1053
P-R04-1054
P-R04-1055
P-R04-1056
P-R04-1057
P-R04-1058
P-R04-1059
P-R04-1060
P-R04-1061
P-R04-1062
P-R04-1063
P-R04-1064
P-R04-1065
P-R04-1066
P-R04-1067
P-R04-1068
P-R04-1069
P-R04-1070
P-R04-1071
P-R04-1072
P-R04-1073
P-R04-1074
P-R04-1075
P-R04-1076
P-R04-1077
P-R04-1078
P-R04-1079
P-R04-1080
P-R04-1081
P-R04-1082
P-R04-1083
P-R04-1084
P-R04-1085
P-R04-1086
P-R04-1087
P-R04-1088

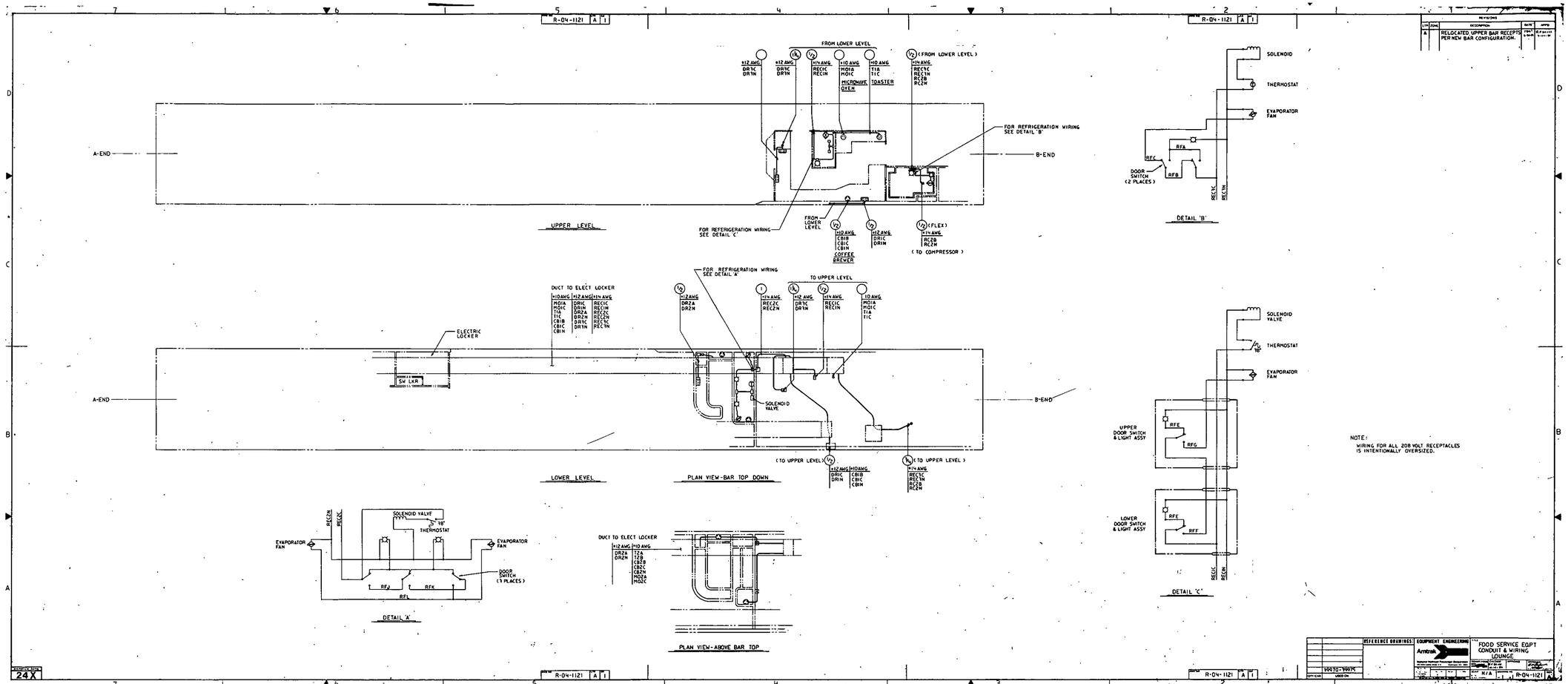

R-04-1121 A 1
REVISIONS
A RELOCATED UPPER BAR RECEPTS PER NEW BAR CONFIGURATION.
FROM LOWER LEVEL
+12 AWG DR7C DR7N
+12 AWG DR7C DR7N
+14 AWG REC1C REC1N
+10 AWG MO1A MO1C
MICROWAVE OVEN
+10 AWG T1A T1C
TOASTER
(FROM LOWER LEVEL)
+14 AWG REC7C REC7N RC2B RC2N
FOR REFRIGERATION WIRING SEE DETAIL 'B'
A-END
B-END
UPPER LEVEL
FOR REFERIGERATION WIRING SEE DETAIL 'C'
FROM LOWER LEVEL
+10 AWG CB1B CB1C CB1N
COFFEE BREWER
+12 AWG DR1C DR1N
(FLEX)
+14 AWG RC2B RC2N
(TO COMPRESSOR)
SOLENOID
THERMOSTAT
EVAPORATOR FAN
RFA
RFC
RFB
DOOR SWITCH (2 PLACES)
RECTC
RECTN
DETAIL 'B'
FOR REFRIGERATION WIRING SEE DETAIL 'A'
TO UPPER LEVEL
DUCT TO ELECT LOCKER
+10 AWG MO1A MO1C T1A T1C CB1B CB1C CB1N
+12 AWG DR1C DR1N DR2A DR2N DR7C DR7N
+14 AWG REC1C REC1N REC2C REC2N REC7C REC7N
+12 AWG DR2A DR2N
+14 AWG REC2C REC2N
+12 AWG DR7C DR7N
+14 AWG REC1C REC1N
+10 AWG MO1A MO1C T1A T1C
ELECTRIC LOCKER
SW LKR
SOLENOID VALVE
(TO UPPER LEVEL)
+12 AWG DR1C DR1N
+10 AWG CB1B CB1C CB1N
(TO UPPER LEVEL)
+14 AWG REC7C REC7N RC2B RC2N
LOWER LEVEL
PLAN VIEW-BAR TOP DOWN
SOLENOID VALVE
THERMOSTAT
EVAPORATOR FAN
UPPER DOOR SWITCH & LIGHT ASSY
RFE
RFG
LOWER DOOR SWITCH & LIGHT ASSY
RFE
RFF
RECCC
RECCN
DETAIL 'C'
NOTE:
WIRING FOR ALL 208 VOLT RECEPTACLES IS INTENTIONALLY OVERSIZED.
SOLENOID VALVE
THERMOSTAT
EVAPORATOR FAN
EVAPORATOR FAN
DOOR SWITCH (3 PLACES)
RFJ
RFK
RFL
DETAIL 'A'
DUCT TO ELECT LOCKER
+12 AWG DR2A DR2N
+10 AWG T2A T2B CB2B CB2C CB2N MO2A MO2C
PLAN VIEW-ABOVE BAR TOP
REFERENCE DRAWINGS:
EQUIPMENT ENGINEERING
Amtrak
FOOD SERVICE EQPT CONDUIT & WIRING LOUNGE
9970-9975
N/A
R-04-1121 A 1
24X

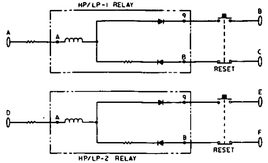

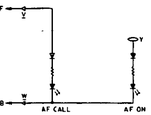

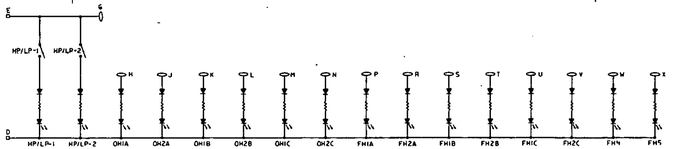

"ON" PILOT LIGHTS

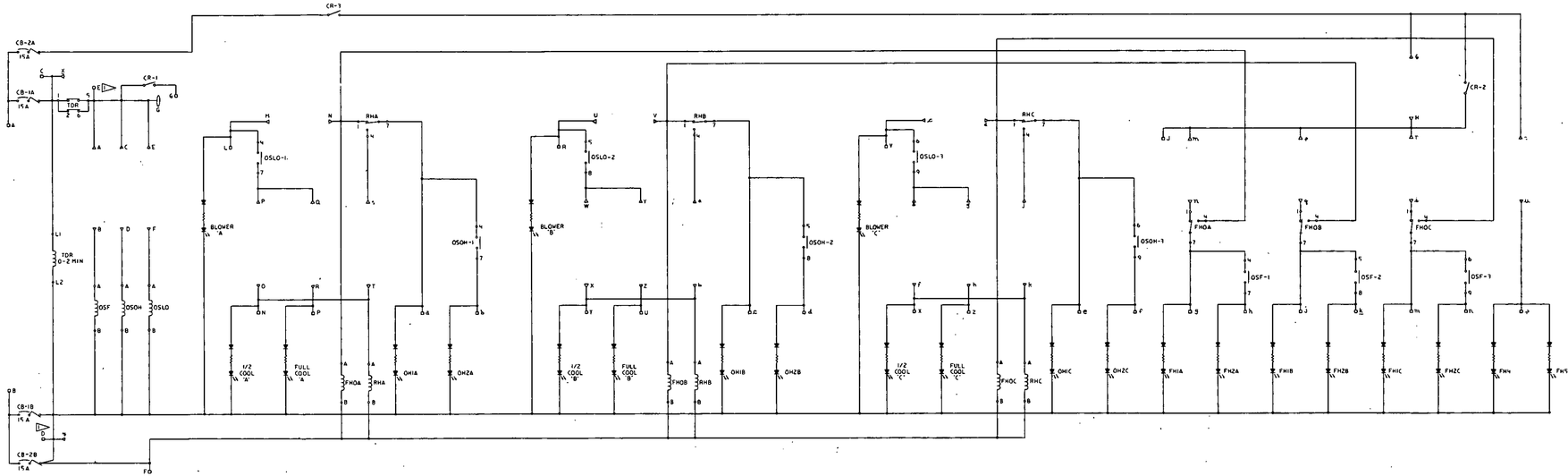

LEGEND

△ THERMOSTAT PLUG PIN (J13)
○ CONTROL PLUG PIN (J12)
⬭ PILOT LIGHT PLUG PIN (J11)

NOTES

1. SEE "ON" PILOT LIGHT CIRCUIT.
2. LED RESISTORS - 5.6K

	CR1	CR2	CR3
NORMAL	+	+	+
OFF	0	0	+
LAMOVER	0	0	+

OPEN 0
CLOSED +

SWITCH CONTACT CLOSURE

4VP RELAY PIN ASSIGNMENT

SPARE PINS

J1 - SPARE PINS: Z, a, b, d
J2 - SPARE PINS: H, K, M, S, W, r, a
J3 - SPARE PINS: J, K, L, r

REVISIONS				
LTR	ZONE	DESCRIPTION	DATE	APP'D
A		REVISED TCMP CONTROL PLY DESIGNATIONS PER ENGINEER ORD #23-5-66-009 REVISIONS D	5/23/66	[illegible]
B	A1	ADDED "SPARE PINS" LIST	9-9-66	[illegible]
	B8	A "0" WAS "D"	9-9-66	

REFERENCE DRAWINGS: DIAGRAM E-E-3-9-66-009	EQUIPMENT ENGINEERING	TITLE: TEMPERATURE CONTROL PANEL SCHEMATIC OGONTZ	
39973-74	Ambrac		
39900-01			
CPY-CHP	USED ON		R-01-1139 B

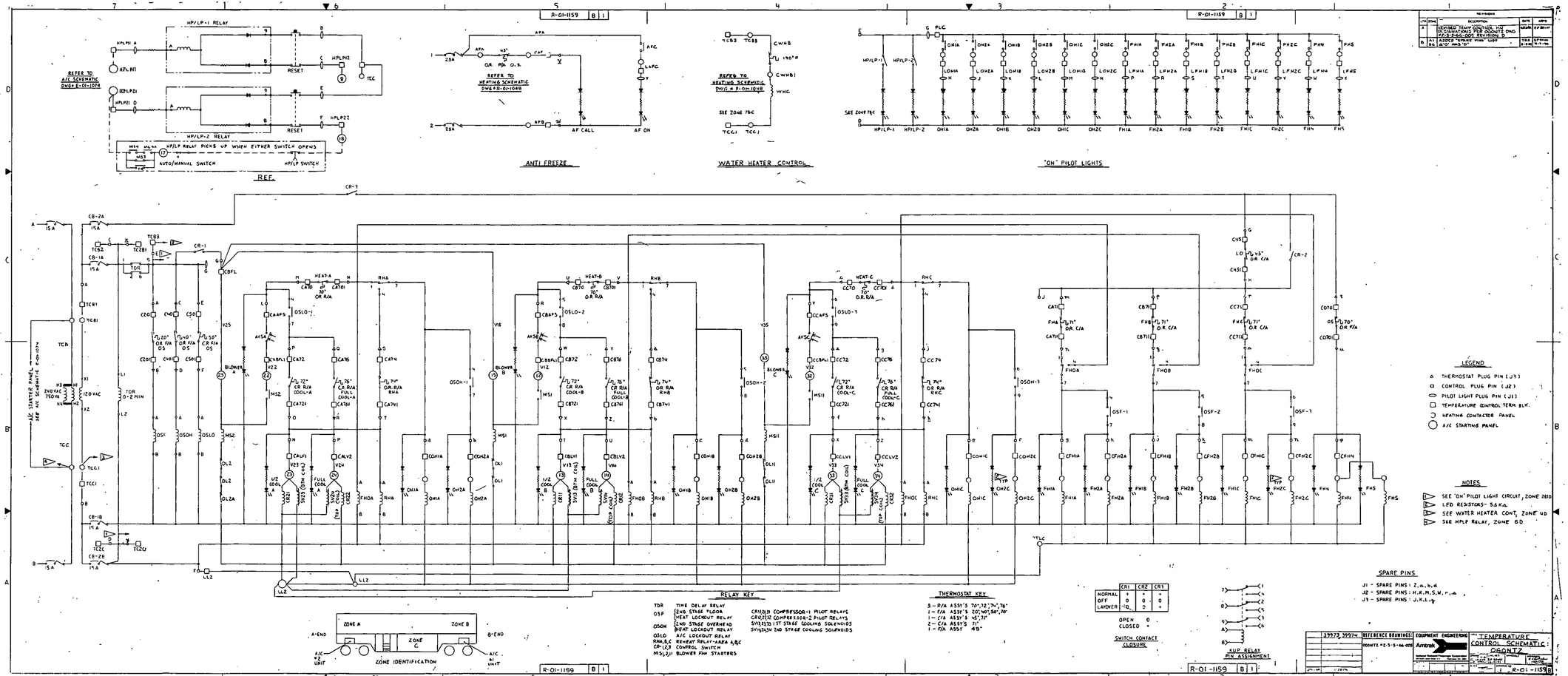
HP/LP-1 RELAY
HP/LP-2 RELAY
REFER TO A/C SCHEMATIC DWG# R-01-1074
HP/LP RELAY PICKS UP WHEN EITHER SWITCH OPENS
AUTO/MANUAL SWITCH
HP/LP SWITCH
REF.
ANTI FREEZE
REFER TO HEATING SCHEMATIC DWG # R-01-1048
WATER HEATER CONTROL
'ON' PILOT LIGHTS
R-01-1159 B 1
REVISIONS
DESCRIPTION
DATE
APP'D
ADDED TRANS CONTROL PIN DESIGNATIONS PER DOOLITTLE DWG #P-3-2-94-005 REVISION G
ALT ACCESS "SPLICE PINS" LIST
4/7/00 WAS "D"
TEMPERATURE CONTROL SCHEMATIC
DOOLITTLE
EQUIPMENT ENGINEERING
Amtrol
LEGEND
THERMOSTAT PLUG PIN (J3)
CONTROL PLUG PIN (J2)
PILOT LIGHT PLUG PIN (J1)
TEMPERATURE CONTROL TERM BLK.
HEATING CONTACTOR PANEL
A/C STARTING PANEL
NOTES
SEE 'ON' PILOT LIGHT CIRCUIT, ZONE 2B
LED RESISTORS- 5.6 K Ω
SEE WATER HEATER CONT, ZONE 4D
SEE HP/LP RELAY, ZONE 6D
SPARE PINS
J1 - SPARE PINS : Z, a, b, d
J2 - SPARE PINS : H, K, M, S, W, Y, a, b
J3 - SPARE PINS : J, K, L, g
RELAY KEY
TDR TIME DELAY RELAY
OSF 2ND STAGE FLOOR HEAT LOCKOUT RELAY
OSOH 2ND STAGE OVERHEAD HEAT LOCKOUT RELAY
OSLO A/C LOCKOUT RELAY
RHA,B,C REHEAT RELAY-HARA A,B,C
CR-1,2,3 CONTROL SWITCH
MS1,2,11 BLOWER FAN STARTERS
CR1,2,3 COMPRESSOR-1 PILOT RELAYS
CR12,13,23 COMPRESSOR-2 PILOT RELAYS
SV13,23,33 1ST STAGE COOLING SOLENOIDS
SV14,24,34 2ND STAGE COOLING SOLENOIDS
THERMOSTAT KEY
5 - R/A A55°'S 70°,72°,74°,76°
1 - F/A A59°'S 70°,74°,50°,76°
1 - C/A A53°'S 45°,72°
2 - C/A A55°'S 72°
1 - F/A A55°'S 45°
SWITCH CONTACT CLOSURE
NORMAL
OFF
LAYOVER
OPEN 0
CLOSED +
KUP RELAY PIN ASSIGNMENT
ZONE IDENTIFICATION
A-END
B-END
A/C #2 UNIT
A/C #1 UNIT
ZONE A
ZONE B
ZONE C
35573, 35574
REFERENCE DRAWINGS
DOOLITTLE-P-3-2-94-005
TEMPERATURE CONTROL SCHEMATIC
DOOLITTLE
R-01-1159 B 1
21

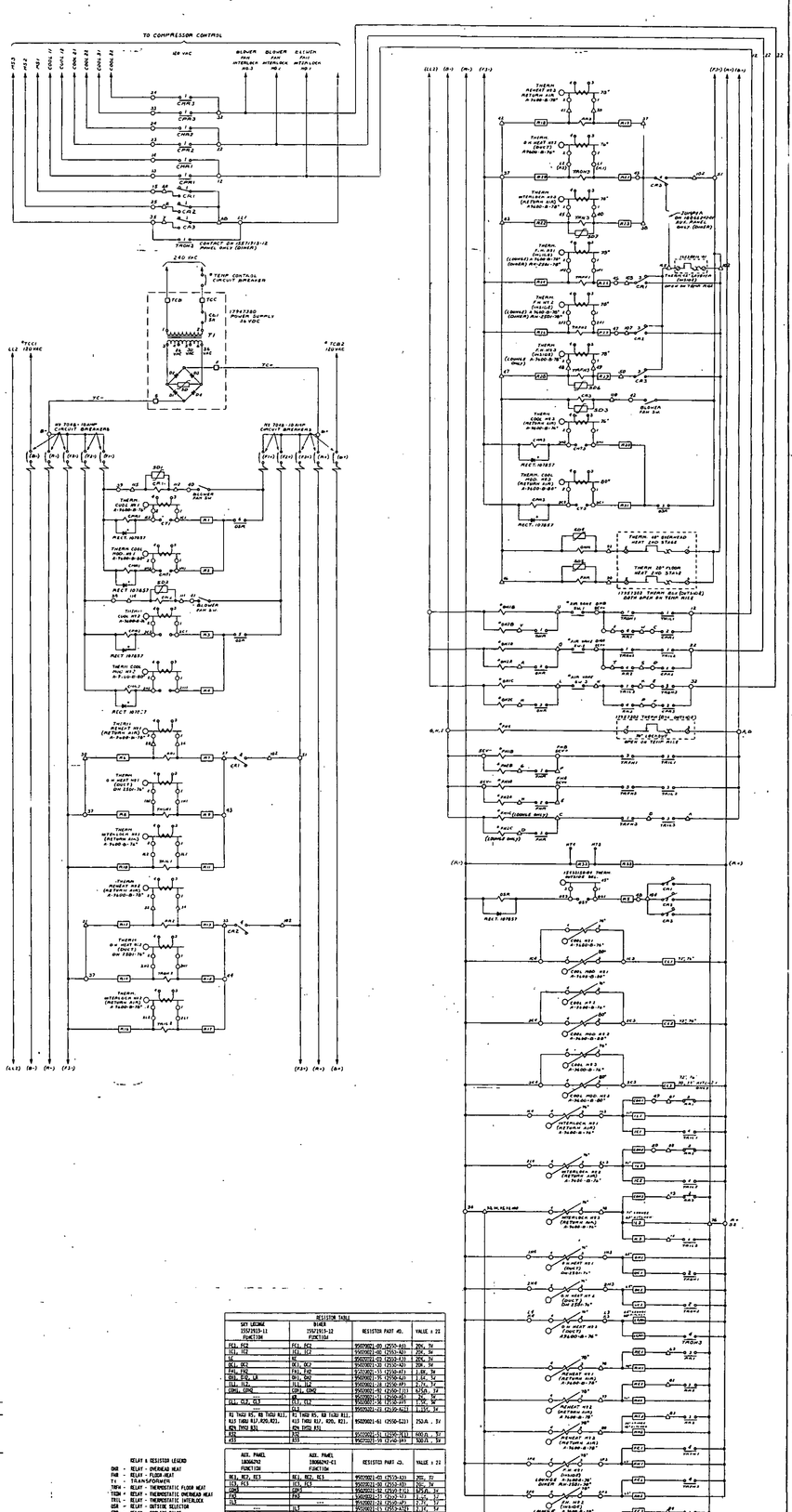
TO COMPRESSOR CONTROL
40 VAC
BLOWER FAN INTERLOCK #3
BLOWER FAN INTERLOCK #2
BLOWER FAN INTERLOCK #1
CONTACT ON 1557315-2 PANEL BASE (SHOWN)
240 VAC
* TEMP CONTROL CIRCUIT BREAKER
TCC
17947280 Power Supply 24 VDC
TC1
TC2
TC-
* TCC1 120 VAC
* TCC2 120 VAC
30 TCB1-15AMP CIRCUIT BREAKERS
30 TCB2-15AMP CIRCUIT BREAKERS
BLOWER FAN #1
BLOWER FAN #2
RECT 1817857
RECT 1817858
RECT 1817859
THERM. RESET HI (RETURN AIR) @ 71.00-0.78°
THERM. 0 HEAT HI (DUCT) ON 120.0-3°
THERM. INTERLOCK HI (RETURN AIR) @ 71.00-0.78°
THERM. RESET HI2 (RETURN AIR) @ 71.00-0.78°
THERM. 0 HEAT HI2 (DUCT) ON 120.0-3°
THERM. INTERLOCK HI2 (RETURN AIR) @ 71.00-0.78°
THERM. RESET HI3 (RETURN AIR) @ 71.00-0.78°
THERM. 0 HEAT HI3 (DUCT) ON 120.0-3°
THERM. INTERLOCK HI3 (RETURN AIR) @ 71.00-0.78°
THERM. RESET HI4 (RETURN AIR) @ 71.00-0.78°
THERM. 0 HEAT HI4 (DUCT) ON 120.0-3°
THERM. INTERLOCK HI4 (RETURN AIR) @ 71.00-0.78°
THERM. RESET